[redacted]

[redacted]

[redacted]

[redacted]

[redacted]

[redacted]

[redacted]

[redacted]

[redacted]

(28,505)

SUPREME COURT OF THE UNITED STATES.

OCTOBER TERM, 1922.

No. 178.

EIBEL PROCESS COMPANY, PETITIONER,

vs.

MINNESOTA & ONTARIO PAPER COMPANY.

ON WRIT OF CERTIORARI TO THE UNITED STATES CIRCUIT COURT OF APPEALS FOR THE FIRST CIRCUIT.

INDEX.

	Original.	Print.
Caption	a	a
Record from the district court of the United States for the district of Maine	1	1
Bill of complaint	1	1
Motion for preliminary injunction	5	5
Mandate	5	5
Stipulation as to what Patrick Gray would testify to if called as a witness	9	9
Stipulation as to using printed Patent Office copies of United States and foreign letters patent with same force and effect as certified copies	10	10
Testimony of Elliott F. Aldrich	11	11
Notary's certificate	72	72
Testimony of O. L. E. Weber	73	73
Stipulation *in re* proceedings to compel O. L. E. Weber to answer certain questions, etc	75	75
Testimony of Richard F. Creamer	78	78

JUDD & DETWEILER (INC.), PRINTERS, WASHINGTON, D. C., APRIL 1, 1922.

	Original.	Print.
Testimony of Leon La Velley	80	80
Frederick Bellile	88	88
Robert W. Haddock	91	91
Notary's certificate	101	101
Testimony of John Glenn	103	103
Peter Talbot	112	112
Elliott F. Aldrich (recalled)	119	119
Notary's certificate	159	159
Stipulation as to what Edward A. Edmonds would testify if called as a witness	160	160
Stipulation as to answers O. L. E. Weber would give to questions already put to him if he were recalled, etc	164	164
Stipulation as to answer to cross-question 93 of testimony of Elliott F. Aldrich	167	167
Stipulation as to time for filing answer and affidavits and for hearing on preliminary injunction	171	168
Stipulation as to time for filing answer and affidavits and for hearing on preliminary injunction	172	168
Stipulation as to defendant's time for taking depositions	172	169
Stipulation as to taking testimony in deposition form, as to dates when evidence is to be furnished and as to right to call witnesses	173	169
Stipulation as to testimony of Louis C. Smith	173	169
Stipulation as to change of name of defendant and as to testimony of Robert W. Haddock	175	171
Opinion of district court, Hale, J	176	171
Final decree	192	181
Petition for appeal	193	182
Assignment of errors	194	183
Order allowing appeal	195	184
Order suspending injunction	196	184
Order for reproduction of testimony in exact words of witnesses	197	185
Citation and service	197	185
Bond on appeal	198	186
Præcipe for transcript	200	187
Stipulation as to transcript of record	201	188
Order extending time within which to file transcript of record	202	189
Certificate of clerk of district court	205	190
Opinion of circuit court of appeals, Anderson, J	207	191
Hearing	231	207
Final decree	231	207
Stipulation	231	208
Motion for stay of mandate	232	209
Order of court staying mandate	233	209
Certificate of clerk of circuit court of appeals	233	209
Answer in district court of the United States for the district of Maine	1	211

	Original.	Print.
Amended answer	vi	216
Notice of taking depositions *de bene esse*	1	219
Testimony of Cone Barlow	2	220
John A. Devine	14	232
Joseph A. La Valley	28	246
Carl F. Beyerl	37	255
Mike Peter Ludwig	78	296
George Tomske	87	305
Peter R. Thom	105	323
W. H. Ryan	129	347
Noble J. Ross	133	351
Noble J. Ross (recalled)	163	381
Noble J. Ross (recalled)	200	418
Michael Argy	212	430
John T. Cunningham	237	455
Edward M. Bowman	256	474
William F. Hazel	273	491
John D. Bailey	306	524
Clarence E. Kinney	332	530
Joseph Atwood White	379	597
Harry E. Rockwood	412	630
Harry C. Kinne	419	637
H. James Cadwell	421	639
Stuart D. Lansing	428	646
Geo. H. Brown	452	670
John Anderson	473	691
George C. Bayless	483	701
J. H. Machette	501	719
Chas. R. Dickinson	507	725
Fred Philander Hall	525	743
Byron F. Horne	530	748
Charles E. Barrett	550	768
John E. Horne	568	786
Charles E. Barrett (recalled)	582	800
John Newman Davis	594	812
Abiram F. Smith	605	823
John Newman Davis (recalled)	644	862
Henry W. Carter	667	885
Chas. M. Allen	730	948
Joseph P. Livermore	743	961
Stipulation respecting Barrett & Horne drawing	778	996
Defendant's supplemental record	779	997
Stipulation as to affidavits	781	999
Affidavit of James M. Murray	782	1000
A. W. Bronk	783	1001
L. G. Wilson	785	1003
L. G. Wilson	786	1004
Clerk's certificate of district court	788	1006
Clerk's certificate circuit court of appeals for the first circuit	789	1007

	Original.	Print.
United States letters patent	2	1011
Plaintiff's Exhibit Patent in Suit, Eibel 1907 Patent, No. 845,224	2	1011
Plaintiff's Exhibit Barrett & Horne 1899 Patent, No. 634,228	8	1015
Savery 1901 Patent, No. 675,072	14	1020
Kutter 1900 Patent, No. 654,651	26	1028
Kutter 1901 Patent, No. 683,949	30	1031
Moore & White 1906 Patent, No. 809,832	34	1034
Defendant's Exhibit V-18—Eibel 1907 Patent, No. 851,227	42	1039
V-8—Barrett & Horne 1902 patent, No. 691,333	46	1042
T-9—Millard 1909 patent, No. 933,656	56	1048
B—Savery 1903 patent, No. 742,239	62	1052
K—Moore & White 1901 patent, No. 684,081	70	1057
British patents	75	1061
Plaintiff's Exhibit Davidson & Kitchin, No. 14,193 of 1895	75	1061
Johnson, No. 3612 of 1900	79	1063
Craig, No. 24,669 of 1893	85	1066
Stipulation *re* German transcripts	89	1069
German patents	89	1069
Plaintiff's Exhibit Schnitzler, No. 144,508	89	1069
Andres, No. 83,020	95	1071
Seybold, No. 128,826	101	1073
Bruderhaus, No. 146,021	107	1075
Plaintiff's Exhibit Opinion of Court of Appeals, Remington-Martin Case	113	1076
Defendant's Exhibit A—Drawing showing arrangement of blocks under Fourdrinier machines at International Falls	127	1085
D—Blueprints two 154-inch Fourdrinier parts, etc. (in two parts)	131	1085
E—Blueprint inclination of wire and frame of Fourdrinier parts of paper machine	133	1085
R-5—Blueprint No. 2 Northern machine	135	1085
T—Drawing, vertical elevation of machine built for Raymondville Paper Co., June 15, 1904	137	1085
T-1—Blueprint "table bar bracket" shown in Exhibit T	139	1085
T-3—Remington-Martin letter, October 1, 1904	141	1086
T-4—Laurentide Paper Co. letter, October 11, 1904	141	1086
T-5—Laurentide Paper Co. letter, January 28, 1905	142	1087

	Original.	Print.
Defendant's Exhibit T-6—Photostatic reproduction, page 90, "The Paper Mill," February 10, 1906	143	1087
T-7—Advertisement of Bagley & Sewall Co. in "The Paper Mill," February 10, 1906	145	1087
T-8—Table on page 258 of Trautwine's Pocket Book of Civil Engineering.	147	1087
T-13—Letter from Rhinelander Paper Co.	149	1088
U-2—Testimonial letters, folder	151	1089
V-5—Bayless-Austin machine	157	1092
O—Blueprint of Kimberly-Clark machine No. 1	159	1092
W—Set of Carter diagrams, sheets 1, 1-A, 2, 2-A, and 3	161	1092
Blueprint attached to affidavit of A. W. Bronk	171	1092
Clerk's certificate	173	1093
Writ of certiorari and return	174	1093

VOLUME I.

UNITED STATES CIRCUIT COURT OF APPEALS FOR THE FIRST CIRCUIT.

OCTOBER TERM, 1920.

No. 1504.

MINNESOTA & ONTARIO PAPER COMPANY,
DEFENDANT, APPELLANT,

v.

EIBEL PROCESS COMPANY,
PLAINTIFF, APPELLEE.

TRANSCRIPT OF RECORD OF DISTRICT COURT.

[FILED IN CIRCUIT COURT OF APPEALS, FEBRUARY 21, 1921.]

District Court of the United States,

DISTRICT OF MAINE.

IN EQUITY.

No. 769.

EIBEL PROCESS COMPANY, PLAINTIFF,

v.

MINNESOTA AND ONTARIO POWER COMPANY, DEFENDANT.

Eibel Patent No. 845,224.

BILL OF COMPLAINT.

[Filed January 1, 1917.]

Eibel Process Company, a corporation duly organized under the laws of the State of Maine, located at Portland in said State of Maine, brings this bill of complaint against Minnesota and Ontario Power Company, a corporation duly organized under the laws of the State of Maine, and a citizen and inhabitant of said State and District of Maine, having a usual place of business at Portland in said District.

The plaintiff avers: —

1. The incorporation and citizenship of the parties is as above set forth, and this is a suit arising under the patent laws of the United States.

2. On August 22, 1906, William Eibel, of Rhinelander, Wisconsin, being within the meaning of the statutes of the United States then in force the original and first inventor of certain new and useful improvements in Fourdrinier machines, and being entitled to Letters Patent of the United States thereon under the provisions of said statutes, duly filed in the United States Patent Office an application for Letters Patent for said improvements, and by a

valid assignment duly recorded in the office of the Commissioner of Patents of the United States said Eibel assigned to the plaintiff all right, title and interest in and to said inventions and application, and in and to any Letters Patent which might issue thereon to the plaintiff, and requested the Commissioner of Patents to issue such patent to the plaintiff, and thereupon all right, title and interest in said inventions and application and in the patent to issue thereon became vested in the plaintiff.

3. Thereupon, all the requirements of the statutes then in force having been duly complied with, Letters Patent of the United States No. 845,224 were duly issued on February 26, 1907, pursuant to said application and assignment, to the plaintiff as assignee of said Eibel, and thereupon the title in and to said patent and all rights thereunder became vested in the plaintiff, and has since continuously remained vested in the plaintiff, and the plaintiff produces a copy of said Letters Patent and prays that the same may be taken as a part of this bill.

4. The inventions described and claimed in said patent are of great value and utility, and the plaintiff is and has been at all times since the issuance of said patent engaged in the business of promoting the use under license from the plaintiff of Fourdrinier machines embodying the inventions described and claimed in said patent and operated as therein described, and has spent large sums of money in advertising and carrying on said business and in promoting the use of said improvements and making the public acquainted with the advantages thereof, and many machines constructed according to the inventions described and claimed in said patent and operated as therein described and claimed have been and are in use under license from the plaintiff, and said inventions have proved very advantageous and successful, and said business has been and is of great value to the plaintiff.

5. On or about December 16, 1911, the plaintiff filed a bill of complaint in the District Court of the United States for the Northern District of New York against the Remington-Martin Company, said cause being numbered 7309 in equity in said court, alleging infringement by said Remington-Martin Company of said Eibel patent, and

thereupon the said defendant, Remington-Martin Company, filed an answer denying the validity of said patent, and denying infringement thereof, and issue was duly joined, and thereupon proofs were taken at length in behalf of the plaintiff and of the defendant in said cause for final hearing. Subsequently a supplemental bill and a decree thereon were entered in said cause, joining as a party defendant Remington Paper & Power Company, Inc. Upon final hearing his Honor Judge Ray entered a final decree dismissing said bill. From said decree the plaintiff appealed to the United States Circuit Court of Appeals for the Second Circuit, and said appeal came on to be heard before said United States Circuit Court of Appeals for the Second Circuit on March 20 and 21, 1916, and was argued by counsel and considered by the court, and thereupon, on or about April 11, 1916, said United States Circuit Court of Appeals for the Second Circuit handed down an opinion reversing said final decree of the District Court for the Northern District of New York and holding said patent valid and infringed, as to claims 1, 2 and 3 thereof, and on April 22 the mandate of said Court of Appeals to said District Court duly issued ordering, adjudging and decreeing that said final decree dismissing the bill of complaint be reversed, with costs, and the record remanded with directions to enter a decree vacating said final decree and holding said Eibel patent, owned by the plaintiff, valid and infringed by the defendants as to claims 1, 2 and 3 thereof, not passing upon the other claims of said patent, ordering an injunction against said defendants and each of them, ordering that the plaintiff recover from the defendants and each of them profits and damages and for an accounting, and for further proceedings in accordance with the law and in conformity with the opinion of said Court of Appeals, with costs to plaintiff, and thereupon, pursuant to said mandate, a decree comformable to said mandate was entered by said District Court for the Northern District of New York.

6. The plaintiff and all persons making or vending any machines for or under it or its authority embodying the construction described and claimed in Letters Patent have given due notice to the public that the same are patented and have affixed or caused to be affixed

to each such machine so made and used by it or them the word "Patented", together with the day and year the said patent was granted.

7. The plaintiff is informed and believes and therefore avers that the defendant has been since February 26, 1907, and still is, unlawfully and without license of the plaintiff infringing said patent and the rights of the plaintiff thereunder by making, using and operating Fourdrinier machines constructed and operated according to said Letters Patent and embodying the inventions described and claimed in said Letters Patent, in violation and infringement of the plaintiff's rights, and the defendant has been duly notified of its infringement and has continued after such notice to make and use said machines as aforesaid, and threatens to continue said infringement. By reason of said infringement the plaintiff has been greatly damaged and the defendant has made great profits. And the said infringement of the defendant so long as it continues has the effect of encouraging others to believe that they may without license infringe plaintiff's right and of causing others to infringe, all to the irreparable injury of the plaintiff. And the plaintiff has no adequate remedy at law.

Wherefore the plaintiff prays:

1. For a perpetual injunction restraining the defendant, its officers, clerks, attorneys, agents, servants and workmen, from infringing said Letters Patent, and for a preliminary injunction to the like effect pending this suit.

2. That the plaintiff recover the profits realized by defendant and the damages suffered by the plaintiff by reason of said infringement, and that any damages assessed may be tripled, and for an accounting of such profits and damages, and for its costs.

3. For such other and further relief as the circumstances of the case may require.

EIBEL PROCESS COMPANY,
by GARRET SCHENCK, *President.*

FISH, RICHARDSON & NEAVE,
HARRISON F. LYMAN,
Solicitors and of Counsel for Plaintiff.

COMMONWEALTH OF MASSACHUSETTS.

COUNTY OF SUFFOLK, ss.

On this twenty-seventh day of December, 1916, before me came the above-named Garret Schenck, President of Eibel Process Company, the plaintiff named in the foregoing bill, and, being duly sworn, did depose and say that he has read the foregoing bill and that the same is true of his own knowledge except as to the matters therein stated on information and belief, and as to those matters he believes it to be true, and that he verily believes the said William Eibel in the said bill named to be the original and first inventor of the inventions described and patented in the Letters Patent issued on his application as alleged in said bill.

FRED T. DOLBEARE,

[SEAL] *Notary Public.*

MOTION FOR PRELIMINARY INJUNCTION.

[Filed January 1, 1917.]

Now comes the complainant and moves that pending a final decision in this cause a preliminary injunction issue enjoining and restraining the defendant, its officers, directors, attorneys, agents, servants, clerks and workmen from making, using or selling machines embodying or operated according to the inventions described in Letters Patent of the United States to Eibel No. 845,224, and referred to in claims 1, 2 and 3 thereof, and from infringing said Letters Patent or the plaintiff's rights thereunder in any way whatsoever.

By its Solicitors,

FISH, RICHARDSON & NEAVE.

MANDATE.

February 5, 1920.

[L.S.] UNITED STATES OF AMERICA, ss.

THE PRESIDENT OF THE UNITED STATES OF AMERICA

To the Honorable the Judge of the District Court of the United States for the District of Maine, GREETING:

Whereas, lately in the District Court of the United States for the District of Maine, before you, in a cause numbered and entitled,

No. 769, Equity.

Eibel Process Company, Plaintiff,

v.

Minnesota and Ontario Power Company, Defendant,

the following Order for Preliminary Injunction was entered on March 29, 1917: —

ORDER FOR PRELIMINARY INJUNCTION.

March 29, 1917.

This case came on to be heard upon the motion for a preliminary injunction filed in behalf of plaintiff and the affidavits filed in support of said motion by plaintiff and in opposition to said motion by defendant, and was argued by counsel and considered by the court, and thereupon, upon consideration thereof, it is hereby ordered that a writ of injunction issue out of and under the seal of this court on April 14, 1917, directed to the defendant, Minnesota & Ontario Power Company, enjoining and restraining the defendant, its officers, directors, attorneys, agents, servants, clerks and workmen, and each of them, pending a final determination of this cause, from making, using or selling machines embodying or operated according to the invention described in the Letters Patent to Eibel No. 845,224, and referred to in claims 1, 2 and 3 thereof, and from infringing said Letters Patent or the plaintiff's rights thereunder in any way whatsoever.

Clarence Hale, *District Judge.*

Whereas said Minnesota & Ontario Power Company, defendant as aforesaid, appealed from said interlocutory decree to this United States Circuit Court of Appeals for the First Circuit, as by inspection of the transcript of the record in said cause of the said District Court, which was brought into the United States Circuit Court of Appeals for the First Circuit, by virtue of the aforesaid appeal, agreeably to the Act of Congress, in such cases made and provided, fully and at large appears.

And whereas, in the present term of October, in the year of our Lord one thousand nine hundred and sixteen, the said cause came

on to be heard before the said Circuit Court of Appeals, on the said transcript of record, and was argued by counsel:

On consideration whereof, It is now, to wit, on May 28, 1917, here ordered, adjudged and decreed that the aforesaid order of the District Court for the District of Maine, entered March 29, 1917, be modified to permit the defendant to continue the operation and use at its place of business at International Falls, Minnesota, of the four (4) Fourdrinier machines now and heretofore in use at said place of business until final determination of the cause on the question of validity and infringement.

That the defendant pay to the plaintiff from time to time, beginning with the date of this order and continuing until the said final determination of the cause, as follows: —

(a) Two (2) cents per day per inch of width of wire on the total or aggregate widths of all the Fourdrinier wires attached to the aforesaid four (4) machines at the defendant's place of business at International Falls, Minnesota.

(b) The said amount to be paid by the defendant to the plaintiff on the first day of January, April, July and October of each year, the first payment to be made on the first day of July, 1917, the said payments to cover the preceding calendar quarter.

That if the defendant shall succeed at the said final determination of this cause, the final decree shall direct the repayment of, and the plaintiff shall repay to the defendant, all the monies paid by the defendant to the plaintiff, pursuant to the foregoing.

That if the plaintiff shall succeed at the said final determination of this cause, then the monies paid by the defendant to the plaintiff, pursuant to the foregoing, shall be held by the plaintiff to be applied to the satisfaction of any recovery had by the plaintiff against the defendant in the said cause.

That the payment of monies pursuant to the foregoing by the defendant to the plaintiff, and the receipt thereof by the plaintiff, shall not operate to prejudice either the plaintiff or the defendant in the matter of the recovery of damages or profits; but the payment and receipt of said monies shall be made and had solely for

the purpose of security, in view of the modification of the order of injunction.

That in all other respects the order appealed from be and hereby is affirmed.

All questions of costs on this appeal are reserved to await the final decree.

You, therefore, are hereby commanded that such further proceedings be had in said cause, in conformity with the aforesaid decree of this court, as according to right and justice, and the laws of the United States, ought to be had, the said appeal notwithstanding.

Witness, the Honorable EDWARD D. WHITE, Chief Justice of the United States, the fifth day of , in the year of our Lord one thousand nine hundred and twenty.

Costs to await final decree.

ARTHUR I. CHARRON,
Clerk of the United States Circuit Court of Appeals
for the First Circuit.

EVIDENCE FOR PLAINTIFF.

84 State Street, Boston, September 18, 1917.

Met pursuant to agreement.

Present: HECTOR M. HOLMES, Esq., *Notary Public and Special Examiner;*
HARRISON F. LYMAN, Esq., *Counsel for Plaintiff;*
AMASA C. PAUL, Esq., *Counsel for Defendant.*

It is hereby stipulated and agreed by and between the parties that if Patrick Gray, of Millinocket, Maine, were called as a witness in behalf of plaintiff he would testify as follows, and this stipulation is to have the same force and effect as if he had been so called and had so testified, to wit: —

"My name is Patrick Gray; I am of mature age, and I live in Millinocket, Maine. From March, 1913, to December, 1913, I was in the employment of the Minnesota and Ontario Power Company at International Falls, Minnesota; I was a back tender there on No. 4 machine; there were four Fourdrinier machines there at the time I was there; they were Pusey & Jones machines throughout, with the exception of the winder, which was made by Bagley & Sewall; two of the machines were fitted with wires 154 inches wide, and the two others with wires 184 inches wide; the wires on all these machines were about 70 feet long, and they were all inclined downward from the top of the breast roll to the top of the guide roll. On the No. 4 machine the top of the breast roll was between 14 and 15 inches higher than the top of the guide roll; this height is called the 'pitch' of the wire. On all the other machines the pitch of the wire was substantially the same, that is, between 14 and 15 inches.

The depth of the pond on all these machines at the slice was between six or eight inches.

The speed of the machine on the two smaller machines was about 600 feet per minute, and on the two large machines it was nearly the same.

The sheet being formed on the wire was always smooth and glassy from a point not far from the slice.

There were six suction boxes on each of these machines and they were all inclined with the same inclination as the wire.

The paper which was being made when I was there averaged between 62 and 64 pounds for each 500 sheets, 36 inches long by 48 inches wide.

At present I am a back tender at the mill of the Great Northern Paper Company in Millinocket, Maine, where I have been employed ever since I left the employ of the Minnesota and Ontario Power Company."

Plaintiff offers in evidence a copy of the patent in suit to Eibel No. 845,224, and the same is marked "Plaintiff's Exhibit Patent in Suit". Plaintiff also offers in evidence a copy of the record in the case of Eibel Process Company against Remington-Martin Company in the United States Circuit Court of Appeals for the Second Circuit, the same consisting of two volumes, and it is stipulated that the copy of said record filed with this court heretofore in connection with the motion for preliminary injunction is the copy so marked in evidence.

Counsel for defendant objects to the offer of the record of the Remington-Martin case on the ground that the same is irrelevant and immaterial as evidence in this cause.

Plaintiff offers in evidence a printed copy of the opinion of the Circuit Court of Appeals for the Second Circuit in said case of Eibel Process Company against Remington-Martin Company, and it is stipulated that said copy may be used in lieu of a certified copy of said opinion subject to correction if upon examination error should be found. Said copy is marked "Plaintiff's Exhibit Opinion Court of Appeals Remington-Martin Case".

It is stipulated that printed copies of United States and foreign patents may be used in evidence with the same force and effect as duly certified copies subject to correction if error should appear upon inspection.

DEPOSITION OF ELLIOTT F. ALDRICH.

Elliott F. Aldrich, a witness called in behalf of plaintiff, having been duly sworn, deposes and says as follows:—

Direct Examination by Mr. LYMAN.

Q. 1. Please state your name, age, residence and occupation.

A. My name is Elliott F. Aldrich. I am forty-seven years of age and reside at Quincy, Mass. I am agent of the Eibel Process Company, plaintiff in this case.

Q. 2. Please state what education and experience you have that qualify you to testify regarding paper-making machines.

A. I am a graduate of Cornell University in the department of mechanical engineering, and for many years have been doing engineering work in connection with paper machines, not only since my connection with the Eibel Process Company began, but prior to my connection with that company. I have inspected a large number of Fourdrinier machines for the purpose of studying the conditions leading up to the formation of paper on the wire, and have made numerous determinations of the effect of gravity on the stock with machines running at various pitches and at various speeds.

Q. 3. Are you familiar with the Eibel patent in suit No. 845,224?

A. I am familiar with it and I testified as a witness for the plaintiff in the suit on that patent brought by the Eibel Process Company against Remington-Martin Company et al.

Q. 4. Will you please explain the Fourdrinier machine to which this Eibel patent relates and the patent itself, referring particularly to claims 1, 2, 3, 7, 8 and 12?

A. In my description of the Eibel patent and of the Fourdrinier machine to which it relates I shall follow closely the description contained in the deposition of Arthur D. Little in the Remington-Martin Company case.

The Eibel patent relates, as the inventor states at lines 10 to 15, page 1, "to Fourdrinier machines, and has for its object to construct and arrange the machine whereby it may be run at a very much higher speed than heretofore, and produce a more uniform sheet of paper, which is strong, even and well formed".

The Fourdrinier machine was invented something over one hundred years ago, during which period it has been gradually developed to its present size and remarkable efficiency and has gone into very extensive use.

The Fourdrinier machine is an aggregation of several sections, each composed of many parts, and each section performing a function which is in a sense independent, although for the production of a sheet of finished paper all these functions are interdependent and must be co-ordinated. The first section of the machine has for its function the actual formation of the web, which is later to be transformed into the finished paper, and it does this by distributing the wet stock as uniformly as possible upon an endless wire-cloth sieve, to which, as it travels forward, a sidewise motion or "shake" is imparted to insure the felting and interlocking of the fibres as they are deposited upon the wire by the drainage through the wire of the water in which they were suspended, and this portion of the machine is further supplied with mechanical devices known as suction boxes over which the wire passes, and whose function is to compact the sheet by atmospheric pressure, which forces into the box considerable additional water not removable by drainage.

The next great division or section of the Fourdrinier machine has for its purpose the compacting of the wet sheet by mechanical pressure under rollers, and the compacted sheet then passes continuously to the third section of the machine, the function of which is to dry the sheet, the drying being effected by carrying the sheet over the surface of heated metal cylinders or dryers.

The remaining sections of the Fourdrinier machine have for their object the "finishing" of the sheet by improving or smoothing its surface by means of heavy and highly polished steel rolls between which the sheet is passed.

It is primarily with the first section, that is, the sheet-forming section, known as the Fourdrinier part or wet end, of the machine that the Eibel process is concerned, which end of itself strictly, although not always popularly, speaking constitutes the Fourdrinier machine. This consists of:

1. A flow box into which is pumped a constant supply of the paper-making stock consisting usually of fibres of wet pulp with or without added mineral matter, the whole being mixed with from 135 to 200 times its weight of water, and having the appearance of diluted milk.

2. An endless wire sieve woven with 60 or 70 meshes to the inch in common practice and often 70 feet long and 100 inches or more wide, the whole traveling rapidly over the breast roll, which runs on a horizontal axis at the flow box end of the machine, and the couch roll likewise running on a horizontal axis at the further end of the machine from the flow box.

3. A supporting frame bearing a series of parallel horizontal rollers called table rolls between the breast roll and the couch roll, upon which table rolls the top or active portion of the traveling endless wire sieve is supported so as to present a plane but not necessarily horizontal surface for the reception of the stock.

4. An opening connected with the flow box called the "slice" opening through which the mixture of fibre and water called "stuff" or the "stock" flows on to the sieve in a stream the width of the desired sheet of paper. The stock is carried along on the sieve, draining off its water as it goes until before the couch roll is reached at the further end of the wire the greater part of the water has drained away and the paper in the form of a uniformly distributed wet pulp has sufficient strength to hold together and be carried through a series of pressing and drying rolls and calenders from which it is rolled up as complete paper.

5. Deckle straps consisting of endless rubber bands of square or rectangular section traveling at the speed of the wire are placed at each side of the wire in contact with the top of the same. They are supported on wheels above the wire so that their bottom side which is in contact with the wire runs along with it, the strap thus forming a wall which prevents the paper stock from running off at the sides of the wire.

6. About 20 feet from the breast roll a series of suction boxes is placed beneath and in contact with the under surface of the wire. A partial vacuum is maintained within these boxes so that through

the agency of the atmospheric pressure upon the upper surface of the wet pulp a greater part of the water then remaining in the paper stock is forced out of the pulp into these boxes, so that very little free water remains in the wet web of paper after this has passed beyond the suction boxes.

These are the essential features of the Fourdrinier machine properly so-called — that is, the Fourdrinier part of the paper machine. It comprises in addition many supplementary details of construction and equipment. For instance, above the suction boxes in contact with the surface of the paper is a skeleton roller faced with wire cloth and called the "dandy roll" which gives to the paper substantially the same texture as the surface in contact with the paper-making wire.

Under the wire from the breast roll to the suction boxes are shallow boxes or trays for receiving the water which runs through the wire sieve. This water contains a considerable amount of fibre and of mineral matter — provided clay or similar materials have been used for loading; and to prevent waste this water carrying these materials in suspension is caught by these "savealls" as they are called and pumped back again into the paper stock before it reaches the flow box.

The last roller for supporting the wire is larger than the others and is called the guide roll, since it is equipped with a device for automatically varying the position of the axis of this roll as may be necessary to keep the wire running straight. After the wire goes over the guide roll it drops to the couch roll at a different angle.

In addition is the "shake", namely, means for shaking the whole front end of the machine sidewise to promote the interlocking and felting of the fibres during the process of deposition by drainage. The motion of the shake is very rapid, say two or three complete reciprocations a second, and its amplitude may rarely amount to as much as one-half inch.

All the devices above described and their function in the Fourdrinier machine have been well known and understood for a great many years. The Eibel patent in suit No. 845,224 describes them only so far as necessary to explain the modifications necessary or

desirable for the purposes of the Eibel invention. This construction is plainly shown in the drawings so far as is necessary to explain the invention described in the specification to a practical paper-maker.

Paper machines of the Fourdrinier type are very expensive, the cost of a news machine, independent of its housing, often reaching $100,000, so that, in order to earn a proper return upon this heavy investment, the paper-maker is forced to utilize to the utmost the productive capacity of the machine. The machines are constantly operated day and night, and every endeavor is made to run them at the highest speed consistent with the quality of merchantable paper desired under the conditions imposed by the character and quality of stock and the limitations of the particular machine itself. With a given machine, the total cost of labor and overhead charges is approximately the same whether the machine is prodacing forty tons or fifty tons for twenty-four hours, so that if a machine normally rated for, say, forty tons can have its production increased to fifty tons, the additional ten tons of paper thus gained is produced at little more than the cost of the materials entering into its composition.

Returning now to the machine itself, the first element above described, namely, the flow box, is not shown in Eibel's drawing. The flow box would be at the right of the drawing Fig. 1, so that the paper-making stock would flow from it upon the paper-making wire at or about the breast roll *b*.

The endless paper-making wire is shown at *a*, and runs as shown from the breast roll *b* over the suction boxes *d*, *d*, *d*, and the guide roll *e* to the couch roll *c*, and thence back underneath the machine.

The small rollers called the table rolls (not lettered), supporting the wire, are shown immediately under the wire between the breast roll *b* and the suction boxes, and also at other places where support is required. The dandy roll (not lettered) is shown above the wire just before the second suction box *d*. The deckle straps and savealls are not shown in the drawing.

The paper stock in the flow box flows on to the paper-making wire at, or more commonly slightly beyond, the breast roll, the thickness

of the stream flowing on to the wire being governed by a cross-bar extending across the entire width of the sheet of paper to be made, and at a height above the wire corresponding to the amount of stock which it is desired to flow upon the wire. This cross-bar is called the slice, and it holds back the stock from the wire, so that only a stream of the desired thickness can escape from the flow box out under the slice on the wire. The supply of stock is so adjusted that the stock in the flow box behind the slice extends some distance above the bottom of the slice, and therefore the stock flows out on to the wire under the pressure of a hydraulic head, which may be varied within certain limits if the paper-maker so desires. The original purpose of the slice was to keep the froth and chips, if any, upon the surface of the stock from flowing on to the wire and causing breakage of the paper with the loss of production incident thereto; but it has also the effect in so far as it assists in the maintenance of a hydraulic head of giving a substantial speed to the stock as it flows upon the wire. If the head in the flow box is, for example, two and a quarter inches, the speed with which the stock at the bottom of the stream will flow to the wire will be substantially 200 feet per minute. Various mechanical difficulties, which need not be stated here in detail, limit the amount of head which can conveniently be carried in the ordinary Fourdrinier machine, and so limit the initial velocity which can be given to the stock.

Accordingly, if the paper-making wire under these conditions is run at a speed not exceeding 200 feet, the wire has no work to do in the way of causing the stock to attain the speed of the wire, since the stock starts at that speed. If, however, the wire runs at 400 feet a minute, as was occasionally done on news machines, that is, machines making news paper, at the time of Eibel's invention, then the making wire would be moving at a speed twice that of the stock coming on to the wire under a head of two and a quarter inches, and the wire would be drawn out from under the paper stock, causing under these conditions waves and ripples, until the wire had by its friction given to the stock approximately the speed of the wire; that is, as Eibel says, until an equilibrium

has been established. Even when the stock starts at the exact speed of the wire, ripples always occur in the first portions of the flow on the wire of any machine running at any speed which even approximates 200 feet per minute. Many factors prevent an instantaneous quiescence of the sheet of stock, and the quantitative influence of each at the start is difficult to measure. Among these factors are the irregularities caused by the rush of water from under the slice, the variations between the speeds of the top and bottom of the sheet of stock, the effect of the shake, which is greatest near the breast roll, and the effect of the drainage of water through the wire, which is also greatest immediately after the stock comes upon the wire and causes irregularities of flow.

Accordingly, it is recognized by paper makers that the sheet is necessarily more or less rippled for several feet from the slice, and any sheet smoothing out in that distance may be said to do so "at the start". As the machine supposed in the foregoing illustration is speeded up above 200 feet, the wire remaining horizontal, the wavy part extends further and further from the slice, and greater commotion is caused. This establishes a limit to the possible speed of the machine, for while waves and ripples, if confined to the beginning of the wire, have substantially no effect on the sheet, because of the great fluidity of the stock at this point, and the fact that the sheet has hardly begun to form, yet if the disturbed condition is allowed to extend too far down the wire to a point where the viscosity of the stock is increasing so rapidly as to prevent readjustment after an initial disturbance, the paper formed will be irregular or "wild" because that formed at the crest of the waves will be thick and at the hollows very thin, and the proper interlacing of the fibres will be disturbed, or checked. At a further increased speed, the paper, owing to these irregularities in structure, would break on the machine so often, causing so many delays and interruptions, that no gain in production would follow from the increased speed. Eibel recognized that the variation of speed between stock and wire was the chief cause of this long-extending commotion of the stock on the wire, which made the paper uneven in texture and

strength, and caused breaks, and thus limited the increase in machine speeds, and this invention relates to the remedy.

In that portion of the specification beginning at line 80 on page 1 and extending to line 9 on page 2, the inventor states the prior art as follows: —

> "The Fourdrinier wire has usually been arranged to move in a horizontal plane, although I am aware that means have been provided for adjusting the breast-roll end of the wire to different elevations, usually below the level, to provide for running with different grades of stock — as, for instance, with quick stock and slow stock; but so far as I am aware the making-wire has always had to perform the work of drawing along the stock, and as the wire moved much faster than the stock the stock waved or rippled badly near the breast-roll end of the wire, which gradually diminished until an equilibrium was established and a smooth, even, and glassy surface presented, and not until the waving or rippling ceased did the fibres lay down uniformly and produce a well-formed sheet of paper. The machine has been run necessarily at a slow rate of speed to give ample time for the water to escape and for the fibres to lay down so as to make a uniform sheet, and in case the time was insufficient the breast-roll end of the wire has been lowered still further until the desired result was accomplished. In accordance with my invention I operate entirely above the level to cause the stock to travel by gravity at a velocity approximately equal to the speed of the making-wire, which I believe to be a new principle of operation."

This statement is entirely clear throughout to anyone familiar with the operation of a Fourdrinier machine.

Long previous to the date of the Eibel patent it was a common practice in the art to construct paper machines so that the portion of the frame carrying the wire from the breast roll to the suction boxes was capable of a small amount of vertical adjustment at the breast-roll end, by virtue of which it was possible to depress the wire at this point an inch or two below the horizontal, or to raise

it an inch or two above the horizontal, and such adjustments were sometimes made in practice. Their object was directly concerned with the properties of the particular stock used as regards drainage, and was directly connected with the efficient functioning of the dandy roll. This roll has been described as a skeleton roll covered with wire cloth, and resting and turning on the wet pulp at a point on the wire beyond the first suction box, and its object has been defined as that of giving to the upper surface of the paper a texture approximately similar to that imposed upon the lower side of the sheet as a result of its contact with the woven wire cloth constituting the paper-making wire. It also assists in laying down the fibres and smoothing the sheet. The dandy roll, in case of very many papers, though not usually in news paper, perform another important and distinctive function, which is that of watermarking the sheet.

For the proper functioning of the dandy roll, and in order to secure the desired texture over the upper surface of the sheet from the wire-cloth surface of the dandy roll, it is essential that the stock shall be of a proper consistency as it passes under this roll. If it is too fluid, it recovers from the displacement resulting from contact with the roll, while if the stock is too dry the roll will not work properly, and, besides, the formation of the paper is unduly hurried. These points were fully recognized by practical paper-makers long before the Eibel invention, and, as a result, it was a common practice for them when running a very slow stock, from which the water drained away with comparative difficulty, to depress the wire an inch or two at the breast roll, so that it had a slight upward inclination from the breast roll to the suction boxes. This resulted in the formation of a pool of stock upon the wire of somewhat more than the normal thickness, and gave the stock more time to drain, so that by the time it reached the dandy roll it was of the required consistency for receiving the impression desired. In some cases, also, when working with a very quick, free stock, it was the practice to raise the wire, say an inch or two inches, at the breast roll, so that it had a slight downward inclination, the result of which was so to regulate the drainage that this stock also passed

under the dandy roll at the required consistency. There was no recognition or utilization of any gravity effects upon the stock as influencing or concerned with the relative speed of stock and wire, or as bearing upon the speed possibilities of the machine.

The phrase "quick" means a stock which has a low degree of water retentiveness, the fibres parting with the water quickly; by "slow" stock is meant stock having a high degree of water retentiveness, the fibres parting with the water slowly.

The rate at which stock drains depends upon the character of the fibres, the extent to which they are "beaten", the manner in which they are ground, the temperature of the stock, the proportion of water to pulp in the stock, and other conditions; and there are a number of well-known methods of regulating drainage of the stock on the wire so as to bring it to the dandy roll in a proper condition as to fluidity. The simplest and most obvious method, of course, is to regulate the grinding of the stock or the proportion of water in the stock. Another obvious expedient is to increase or decrease the number of suction boxes on the machine or the vacuum in the boxes. Similarly, if it is desired to give the stock a longer time to drain before reaching the dandy roll, a longer wire can be used, or if it is desired to decrease the drainage a shorter wire can be used. The rapidity of the drainage also depends upon the height of the slice opening, since if a given quantity of stock per second is flowed on to the wire in the form of a thicker stream moving at a slower rate it will drain more rapidly than if it be flowed on in the form of a thinner stream moving at a quicker rate, because of the greater pressure, and also because it remains a longer time on the wire. Other expedients for regulating drainage might be mentioned, as, for instance, increasing or decreasing the number of table rolls, but it is unnecessary to mention all of them.

These adjustments of the prior art to which Eibel refers were merely another well-known means of regulating this matter of drainage. They were provided as a rather fine adjustment for drainage. It is not always easy to get perfect conditions as to drainage by any of the expedients mentioned above, and these slight adjustments of the breast roll up or down were provided in order to compensate

for slight differences in the character of the stock, so that "slower" or more highly diluted stock might be kept longer on the wire, and thus be given a greater time for drainage than "quicker" or less diluted stock, and *vice versa*. If the wire were pitched "up hill" slightly from the breast roll, a pool of stock would be formed upon the wire near the breast roll, and by reason of the increased pressure due to the weight of the water in the pool the stock would drain more rapidly, and also would be given a longer time to drain before reaching the dandy roll than if the wire were horizontal. On the other hand, if the wire were given a slight downward inclination from the breast roll it would be on the wire a somewhat shorter time, and therefore have less opportunity to drain before reaching the dandy roll than if the wire were horizontal. For slow stock, therefore, in cases where this adjustment was used, the wire would be made to run slightly up hill from the breast roll. For quick stock, on the other hand, it would be run horizontal or with a slight downward inclination from the breast roll.

The adjustment might also vary somewhat, according to the thickness of the paper desired, since in making a thick paper the stock should be retained on the wire a somewhat longer time than in making a thin paper.

Referring again to the quotation last made from the Eibel specification, it should be noted that although the variation of speed as between stock and wire is readily recognized as a matter of theory when attention is called to it, yet the fact of the variation and the seriousness of its consequences was very far from obvious. It is, I believe, probable that nine machine tenders or superintendents out of ten assumed that the waves and ripples on high-speed machines were principally due to the increased commotion necessarily caused by forcing the stock out under the slice in greatly increased quantities, combined with the effect of the regular side "shake" required on all machines, and the natural racking of the machine due to such high speeds and the rapid drainage at the start. The variation of speed between stock and wire, that is, their relative velocity, was never considered, and, in fact, did not exist to an appreciable extent in low-speed machines on account of the neces-

sary head in the flow box above referred to. In case of high-speed machines the machine tender could readily see that his flowing stock would not smooth out at speeds higher than his customary speed, but the problem of draining off the water in the shorter time the stock was on the wire, while determining the consistency of stock to be used, the proper head in the flow box, the amount of "shake" and the necessity of minimizing the jar of the machine, due to the increased speed, distracted all attention from the speed variation between stock and wire, which the machine tenders would undoubtedly have regarded as a comparatively trivial matter, even if their attention had been drawn to it.

Eibel, however, placed his finger on the vital point of the difficulty, and conceived a method of avoiding it which has been brilliantly successful. He describes his invention as follows (page 1, lines 16 to 41) : —

> "My invention is embodied, essentially, in the first part or element of the machine having the Fourdrinier wire or paper-making wire, and consists in causing the stock to travel by gravity in the direction of movement of the making-wire and approximately as fast as the making-wire moves, thereby resulting in a gravity-feed for the machine. The stock may be and preferably is caused to travel more rapidly than the normal or usual speed of the making-wire for a certain grade of stock, and means are provided for increasing the speed of the machine so as to cause the making-wire to move at a higher rate of speed than usual, being substantially equal to the speed of the rapidly-moving stock. To accomplish this result in a simple manner, the breast-roll end of the paper-making wire is maintained at a substantial elevation above the level, thereby providing a continuous downwardly moving paper-making wire, and the declination thus given to the wire is such that the stock is caused to travel by gravity in the direction of the movement of the wire and substantially as fast as the wires moves."

Page 2, lines 28 to 33 :

"The elevation above the level at which the breast-roll end of the making-wire is maintained will vary according to the grade of stock, but in any event it will be substantial, so as to cause the stock to move rapidly by gravity."

And page 2, lines 39 to 58:

"For the purpose of increasing the speed of the machine to the maximum I maintain the breast-roll end of the making-wire at a high elevation above the level, so that the stock travels by gravity much faster than the making-wire ordinarily runs for a certain grade of stock, and I then increase the speed of the machine to such extent as to bring the rate of speed of the making-wire up to the speed of the rapidly moving stock, and as a result the capacity of the machine is largely increased.

"I find in practice that by providing a gravity-feed operating substantially as herein described the stock runs smoothly and evenly without waiving or rippling, and the fibres are thereby permitted to settle with great uniformity as regards their distribution over the wire, so that the paper in addition to being well formed is very uniform."

The drawing which forms a part of the specification shows the wire with an inclination of about four per cent, or 12 to 13 inches for a wire of ordinary length. Following Eibel's specification, it is only necessary for a paper-maker to reconstruct his machine so that it will have its paper-making wire declined, as shown in the Eibel patent, and then by degrees to speed up his machine, continuing the increase so long as the sheet of stock flowing down the wire retains a glassy surface, free from waves and ripples. The exact speed for any particular pitch was something which could not be accurately determined in advance, owing to the variations in stock used, paper desired and construction of machines. Such determination is not, in fact, necessary. The grade is to be arranged to give a rapid gravity flow of the stock, and the machine then speeded up to meet it as long as the sheet remains smooth. The Eibel invention thus makes it possible to increase greatly the speed of the wire and at the same time to produce a perfect paper.

The equality of speed between stock and paper is maintained, and waves and ripples are avoided over all that portion of the wire where inequality of speed would have any injurious effect upon the paper.

Practically every paper mill was, prior to and at the time of Eibel's invention, using its utmost endeavors to increase its production and yet make commercial paper. Four hundred and fifty feet per minute was regarded as a very high speed, and up to that time had been seldom if ever exceeded and was generally regarded as about the maximum at which paper could be produced conveniently, for the reason that with a greater initial relative velocity between stock and wire than was represented by this speed the sheet would not smooth out in time to make a good paper. The reason for this was that the drag of the wire had little or no effect at the time when the accelerating force is most needed, *i. e.*, when the stock first comes upon the wire, since the stream of stock is then at its deepest and the drag of the wire has almost literally no effect upon anything except the very lowermost part of the stream, because the upper parts of the stream are accelerated not by the drag of the wire directly, but only by the friction of the particles of liquid immediately below them, which particles furnish an almost frictionless surface, because at that point the stock is so highly liquid. Accordingly, during the first few feet of the flow of the liquid, when the fibres are still in suspension, being shaken back and forth, and when the disturbance of the surface does no harm, little or nothing has been accomplished to bring the speed of the paper stock up to the speed of the wire. When, however, the water has been drained off to such an extent that the woody fibres have to some degree laid themselves down on the surface of the wire (thus greatly increasing its friction), and the remaining stock has a large percentage of woody fibres in it, then the friction of the fibres already upon the wire with the fibre-filled water above them has the effect of catching the fibres which are in suspension and dragging them along, and accelerating the other fibres and the liquid so that it acquires quite rapidly the speed of the wire. But, as this acceleration takes place in a very short space on the wire, it causes great

disturbance if the difference in speed of wire and stock is great when this force begins to act effectively. It also "combs out" the fibres so that they do not interlock transversely, which is very detrimental to the strength of the paper against a longitudinal tear.

On the other hand, with a high elevation of the breast-roll end of the wire and a consequent sharp pitch, there is an acceleration of the stock from the moment it leaves the slice practically as great as at any point on the wire. All the liquid, even the topmost particles, although they are practically not at all influenced by the drag of the wire at that point, receive the full acceleration of gravity, and in consequence not only is the acceleration brought about with much less internal friction and surface disturbances, but it is brought about at the most advantageous period; for the speed of the stock is so rapidly accelerated in the early stages of its flow that at the point where the drag of the wire begins to affect the stock very materially the variation between the speed of the stock and wire has become slight, and there is no serious agitation nor "combing out" effect of the stock on the wires at this vital point where the strength or weakness of the paper is irretrievably fixed. This is true, however high the wire speed, if the pitch of the wire is adjusted to give a corresponding degree of acceleration by gravity. On the other hand, if the drag alone were relied upon, this point where the paper first begins to form to a substantial extent, and which is the vital point in determining its strength, is a mass of foam and ripples whenever the attempt is made to run the machine at higher speeds than those mentioned. Furthermore, the fact that gravity is a constant accelerating force gives it a distinct advantage over the drag of the wire as an accelerating force. If the accelerating force is variable, that in itself will have a tendency to set up transverse waves in the stock. An example will explain my meaning more clearly. If we imagine a bucket of water carried upon a railroad train at high speed, even if the track were absolutely even, its surface would be wavy if the engine exerted a varying pull, because the level of the water surface would be different for each change of speed, and the irregularity of surface caused by the waves would be roughly proportional to the

irregularity of speed. If, however, we imagine the accelerating force to be a dropping weight hanging over a pulley, so that the accelerating force would be absolutely constant, the liquid in the bucket would maintain an absolutely fixed inclination and there would be no waves.

Now, on the paper-making wire the drag increases as the water drains from the wire and as the stock becomes felted on to the wire. This drainage cannot be uniform. A great deal of water drains out at the point of contact with each table roll, and comparatively little drains out between these points of contact, and in consequence the friction increases, not uniformly, but with a sudden increase at each interval, giving the effect of the pull of a jerky train. The drag is also greater at the deckles, where there is a side drag in addition to the bottom drag, and there are further variations if there is any irregularity in the settling of the fibres. In consequence the acceleration by drag will always have a tendency to cause waves, which in extreme cases may be seen to break on the surface like ripples on a beach.

But the pull of gravity is constant, and not jerky, and therefore by the use of gravity as the main accelerating force the acceleration is accomplished without causing material disturbance.

In short, gravity is a force which accelerates the stock from the very start throughout its entire mass and at a uniform rate, in a manner which has no tendency to cause waves and ripples; and it is, therefore, as Eibel discovered, the ideal means for acceleration after the stock comes on to the wire.

The specification is addressed not to the general public or to scientists and involves no higher mathematics. It is addressed to those skilled in the art of paper making, that is, primarily to machine tenders and superintendents. To such it furnishes no difficulty, and it has revolutionized the art of making news paper.

A scientist might suggest that if gravity is an accelerating force and the wire has a uniform speed, unity of speed of stock and wire is not possible, as the stock must either go faster than the wire for the greater part of its course, or slower. This reasoning, in which several practical factors are omitted, would have prevented prior

paper-makers from realizing that a machine could be pitched high enough to give the stock a speed so near that of the wire as to smooth out the surface of the flowing sheet near the start, and yet not ultimately outrun the wire and cause new turbulence immediately thereafter, and at the most important point concerned with the formation of the sheet. In point of fact, with a pitched wire and a correspondingly adjusted wire speed, after the stock once reaches the speed of the wire, under the influence of gravity, it does not thereafter overrun the wire, but continues thereafter at the wire speed. The reason for this is that while the friction between wire and stock near the beginning is very slight, because of the high fluidity of the stock, and the drag of the wire in these early stages has little accelerating effect upon the stock, yet, on the other hand, as the water drains out of the stock, leaving it more and more pulpy and viscous, the friction between wire and stock becomes greater and greater, until by the time equality of speed has been reached between wire and stock the drag of the wire becomes the predominating influence and friction so great as to prevent any further increase of speed of stock. Up to the time when equality of speed is reached, the frictional effect, so far as it operates at all, aids gravity in causing acceleration. Thereafter it opposes and overcomes the influence of gravity.

Eibel recognized that gravity will not give the stock a uniform velocity over the whole wire, but that at some point on the wire a maximum stock speed will be reached (page 1, lines 50 to 52), and he directs the reader of his specification so to adjust his wire speed that the stock will not at its maximum speed, under the influence of gravity, outrun the wire, saying that the speed of the making wire is to be brought up to this "*maximum velocity* of the rapidly moving stock".

Eibel's process incidentally results in other important advantages besides the increase in speed which it secures. The drainage of the stock is better, because it is more uniform and accompanied by less disturbance of the formation of the sheet. The "shake" is rendered more effective in interlocking and felting the fibres, while the drag of the wire on the stock being eliminated in the zone of

formation of the sheet, the disturbing influence due to drag is likewise eliminated.

The importance and usefulness of the invention was instantly recognized by paper-makers when they saw Eibel machines in operation, and I have been deeply impressed by the results of it in securing higher speeds in paper manufacture and regard it as the most important contribution to the art of forming a sheet of paper which has ever come to my notice.

Claim 1 of the patent is as follows: —

> "1. A Fourdrinier machine having the breast-roll end of the paper-making wire maintained at a substantial elevation above the level, whereby the stock is caused to travel by gravity, rapidly, in the direction of movement of the wire, and at a speed approximately equal to the speed of the wire, substantially as described."

The word "substantial" elevation called for by this claim is, as the claim says, an elevation such as to cause the stock "to travel by gravity, rapidly". (See, also, specification, page 2, lines 32 and 33.) The word "substantial" is intended to differentiate Eibel's pitch from the slight and unsubstantial adjustments of the prior art referred to at page 1 of the patent (lines 82–85), which were used for wholly different purposes and in which, as he says (p. 1, lines 88, 89), "the making-wire has always had to perform the work of drawing along the stock", gravity having had no substantial accelerating effect, and the stock not having been "caused to travel by gravity, rapidly". An example of a substantial pitch is shown in the drawing of the patent, in which the wire has a grade of about four per cent as indicated by the horizontal dotted lines sketched below the pitched wire. This grade in the drawing corresponds to a pitch of 12 or 13 inches for a 70-foot wire. The wire speed and the pitch must be so related, to conform to the claim, that the stock under the influence of gravity is accelerated until it reaches a speed substantially equal to that of the wire.

The second claim is as follows: —

> "2. A Fourdrinier machine having the breast-roll end of

the paper-making wire maintained at a high elevation, whereby the stock is caused to travel by gravity faster than the normal speed of the wire for a certain grade of stock, and having means for increasing the speed of the machine to cause the wire to travel at substantially the same rate of speed as the rapidly moving stock, substantially as described."

This claim varies from the first in using the somewhat stronger term "high elevation" instead of "substantial elevation". The expression is found at line 41 of page 2 of the specification, and the context refers to machines running at high speed.

The claim emphasizes the utility of the Eibel process in increasing the speed of paper making, specifying that the pitch shall be such as to cause the stock to travel by gravity faster than the normal speed of the wire for a certain grade of stock (*i. e.*, the normal speed with a horizontal wire), and that there shall be "means for increasing the speed of the machine to cause the wire to travel at substantially the same rate of speed as the rapidly moving stock". This "means" might be change-speed devices such as are shown in Fig. 2 of the Eibel patent, or any equivalent means, such as the ordinary governor for controlling the speed of the engine moving the wire.

The third claim is as follows: —

"3. A Fourdrinier machine having the paper-making wire declined from the breast-roll to the guide-roll, the breast-roll end of the wire being maintained at a substantial elevation above the level, whereby the stock is caused to travel by gravity, rapidly, in the direction of movement of the wire and at a speed approximately equal to the speed of the wire, substantially as described."

This claim is specific in that the declination must extend from the breast roll to the guide roll.

Claims 7 and 8 are as follows: —

"7. A Fourdrinier machine having the paper-making wire declined from the breast-roll to the guide-roll, and the suction

boxes supported at a corresponding declination, substantially as described.

"8. A Fourdrinier machine having the paper-making wire declined from the breast-roll to the guide-roll, and the several suction boxes arranged at different elevations, substantially as described."

These claims refer to that characteristic of Eibel's machine which is an element of claim 3, namely, the declination of the paper-making wire from the breast roll to the guide roll, thus including the suction boxes in the declination.

Claim 12 is as follows:—

"12. In a Fourdrinier machine, a downwardly moving paper-making wire, the declination and speed of which are so regulated that the velocity of the stock down the declining wire, caused by gravity, is so related to the velocity of the wire in the same direction, that waves and ripples on the stock are substantially avoided and the fibres deposited with substantial uniformity on the wire, substantially as described."

This claim specifies that the speed of stock and wire shall be so adjusted that waves and ripples on the stock are substantially avoided, and the fibres deposited with substantial uniformity, this being a result attained by the substantial speed equality of claims 1, 2 and 3.

Q. 5. Have you read the deposition of Patrick Gray in this case?

A. Yes.

Q. 6. Please compare the defendant's machine as described by Gray with the invention of the patent in suit and particularly referred to in claims 1, 2, 3, 7, 8 and 12.

A. It appears from the deposition of Patrick Gray filed in this case that the Minnesota and Ontario Power Company operates four Fourdrinier machines in the manufacture of news paper, which machines are of the well-known Pusey & Jones type, and there is nothing about them calling for special attention except the inclination of their wires and the speed at which they are run. Mr. Gray testifies that these machines, instead of running with the wires hori-

zontal, run with the wires downwardly inclined from the breast roll to the guide roll at a high pitch, the top of the breast roll being elevated above the level of the top of the guide roll in each case about 14 or 15 inches. The speed at which the machines are run is said to be about 600 feet per minute, and the head carried at the slice is about six to eight inches. The length of the wires is 70 feet, which means in the case of a Pusey & Jones machine that the distance from the top of the breast roll to the top of the guide roll along the wire is approximately 28 feet. The machine speed of 600 feet per minute mentioned above is the speed at which the finished paper is reeled off, which means that the wire speed is approximately 550 feet per minute. There is close to ten per cent difference between the paper speed and the wire speed, due to the fact that the paper is somewhat extended in passing from the wire through the calenders. This elevation of 14 or 15 inches is not only a substantial elevation but a high elevation, and altogether beyond the experience of paper-makers before the date of the patent, the wires being given a pitch of slightly greater degree even than that shown in the drawing of Eibel's patent, namely, about four per cent.

Knowing the facts given in Mr. Gray's deposition, I am able to determine the speed which the stock has when it enters upon the wire in these machines, the approximate difference in the speed between stock and wire at various points, and the effect of gravity in the flow of the stock. With a seven-inch head at the slice the initial speed of the stock for its average thickness would be about 350 feet per minute, which means that the difference in speed of stock and wire, or the relative speed between the two at the beginning, is about 200 feet per minute. Under the influence of gravity, due to the pitch of the wire, the speed of flow of the stock will be accelerated as it runs down the wire, and since the wire runs at a constant speed, the difference between the speed of stock and speed of wire will become less and less, until at a point about nine or ten feet from the slice the speed of the stock will equal the speed of the wire. With a specially quick stock, that is, one which parts with its water easily, speed equality between stock and wire would occur somewhat earlier than this. The acceleration of the

stock up to speed equality with the wire is produced on defendant's machines primarily by gravity, due to the pitch of the wires, which causes the stock to travel rapidly in the direction of the movement of the wire, and quickly to reach the speed of the wire. Although gravity is a constant force, it will not, under these conditions, cause the stock to continue to increase in speed beyond the point where it attains equality of speed with the wire. The reason for this is that, although the effect of friction, or "drag", between the stock and the wire is slight at the early stages on the wire because of the highly liquid character of the stock at these stages, yet, as the stock drains more and more and becomes felted down, the fibres attaching themselves more and more to the wire, the effect of this friction, or "drag", continually increases, and by the time the stock has reached the point on the wire where in the defendant's machine speed equality is attained, friction, or "drag", has become the predominating influence and prevents any further acceleration of the stock by gravity The speed of the stock is therefore approximately equal to the speed of the making wire, being identical with the speed of the making wire during about two-thirds of the whole forming length of the wire, and throughout all that part of the wire where it makes any difference whether the speeds are identical or not.

The Gray deposition says: —

> "The sheet being formed on the wire was always smooth and glassy from a point not far from the slice."

Although I have not seen the defendant's machines in operation, I know from my experience with many other machines run at about this speed of defendant's that this will be true with a machine arranged like the defendant's machines and operated in the manner in which the defendant's machines are shown to be operated. There will, of course, be some disturbance of the surface near the slice because of the fact that the top of the stream of stock issues under a smaller head than the bottom of the stream and the wire runs faster than either, and also because of the great drainage at the start; but the ripples due to these causes have no deleterious effect upon the

formation of the paper because speed equality is attained on the wire at such an early stage, and these ripples are, therefore, confined to that part of the wire where the stock is near its maximum of fluidity and before active formation of the paper has begun. With a pitch of the wire such as is present in this machine, the stock has been so accelerated by the time active paper formation begins that the surface ripples have disappeared at this point because the cause which originated them no longer exists. Waves and ripples will be substantially avoided on the defendant's machines.

Comparing the defendant's machines with claim 1 of the patent, it will be seen that each of them is, in the language of the claim, "a Fourdrinier machine having the breast-roll end of the paper-making wire maintained at a substantial elevation above the level, whereby the stock is caused to travel by gravity, rapidly, in the direction of movement of the wire, and at a speed approximately equal to the speed of the wire, substantially as described", in the Eibel specification. The elevation of the breast roll employed on these machines is not merely "substantial", but it is a "high" elevation, being slightly greater than that illustrated in the figure of the Eibel patent in suit.

Referring to claim 2, it appears, as I have stated, above, that each of the defendant's machines is a Fourdrinier machine having the breast-roll end of the paper-making wire maintained at a high elevation, whereby the stock is caused to travel by gravity faster than the normal speed of the wire for the grade of stock on which this machine runs, to wit, news paper stock. When Eibel here refers to "the normal speed of the wire" he means the normal speed at which the grade of stock was run on the horizontal wire in use at the time of his invention, and that speed was not customarily if ever over 450 feet per minute paper speed, or approximately 405 feet per minute wire speed, and probably less, this being about the upper limit of speed at which news paper of standard grade could be made upon a horizontal wire on even the fastest machines. The high elevation of the wire in the defendant's machines causes the stock to travel by gravity something like 145 feet per minute

faster than this "normal speed"; and the machines have, in the language of the claim, means for increasing the speed of the machine to cause the wire to travel at substantially the same rate of speed as the rapidly-moving stock. This means presumably consists, as in the Remington-Martin Company's machines, of the governor on the engine which controls the speed of the wire, enabling the defendant to increase its speed so that the wire travels at substantially the same rate of speed as the stock.

Claim 3 is the same as claim 1, except that it contains the specific provision that the wire shall be declined from the breast roll to the guide roll, a feature which is present in the defendant's machines. What was said above as to infringement of claim 1 applies equally as to claim 3.

Claim 7, in addition to specifying that the paper-making wire shall be declined from the breast roll to the guide roll, requires that the suction boxes be supported at a corresponding declination, and claim 8 is the same as claim 7, except that it uses the language "the several suction boxes arranged at different elevations substantially as described" instead of the language "the suction boxes supported at a corresponding declination substantially as described" of claim 7. The defendant's machines, as Mr. Gray testifies, embody this feature, and therefore fall within the requirements of claims 7 and 8.

Referring to claim 12, it appears that each of the defendant's machines has a downwardly moving paper-making wire, the declination and speed of which are so regulated that the velocity of the stock down the declining wire, caused by gravity, is so related to the velocity of the wire in the same direction that waves and ripples on the stock are substantially avoided, and in these machines, operated as described, the fibres will be deposited with substantial uniformity on the wire.

I am therefore of the opinion that each of the defendant's machines embodies the invention described in the Eibel patent, and more particularly referred to in claims 1, 2, 3, 7, 8 and 12, and that they fall exactly within the definition of the invention of this patent as formulated in each of the several claims referred to.

These machines of the defendant are in all substantial respects the same as the machines which were involved in the suit of Eibel Process Company *v.* Remington-Martin Company et al., recently decided by the United States Circuit Court of Appeals for the Second Circuit, and just as truly embody the Eibel invention and infringe the Eibel claims as did those machines.

The speed of the Remington-Martin machines was 550 and 575 feet per minute, while that of the defendant's machines is about 600 feet per minute. The pitch on the defendant's machines while somewhat greater than that shown in the Eibel patent is somewhat less than the pitches carried on the Remington-Martin machines (which were 18 inches and 20 inches respectively), but the head carried in the defendant's flow boxes is about six to eight inches as against about four inches on the Remington-Martin machines; that is to say, the defendant by reason of its higher head starts the stock on its wires at an initial speed somewhat greater than that on the Remington-Martin machines, so that there is not so great an initial relative velocity between stock and wire in defendant's machines as in the Remington-Martin machines. In defendant's machines the pitch is such as to overcome this initial relative velocity and produce speed equality between stock and wire at substantially the same point on the wire where this result is accomplished by the pitch on the Remington-Martin machines. The means by which the pitch is embodied in the defendant's machine, namely, the blocking under the breast-roll end of the frame of the machine, is similar in every way to that which was involved in the Remington-Martin case, and the Remington-Martin machines also having been given a pitch by a blocking placed under the breast-roll ends of those machines.

Q. 7. Please state what proportion of the news paper manufactured in the United States at the present time is made under licenses from the plaintiff under the patent in suit.

A. Of all the news paper manufactured in the United States, about two-thirds, or some 3,400 tons per day, is being made on Fourdrinier machines licensed under the Eibel patent in suit and embodying the Eibel invention and paying royalty to the Eibel

Process Company. I have reason to believe, also, that there are many other news paper manufacturers who use the Eibel invention without license and in infringement of the patent. The licensees under the patent include the largest paper mills in the United States, the names of the licensees being the following: —

Great Northern Paper Company of Millinocket and East Millinocket and Madison, Maine;

International Paper Company of New York, which owns many widely scattered mills;

St. Croix Paper Company of Woodland, Maine;

Berlin Mills Company of Gorham, New Hampshire;

Finch, Pruyn & Company, Inc., of Glens Falls, New York;

Laurentide Paper Company of Grand Mere, Quebec;

West End Paper Company of Carthage, New York;

Oswego Pulp & Paper Company of Fulton, New York;

Remington Paper & Power Company (successor to the Remington-Martin Company) of Norfolk, Raymondville and Norwood, New York;

St. Regis Paper Company of Deferiet, New York;

Gould Paper Company of Lyon Falls, New York;

DeGrasse Paper Company of Pyrites, New York;

Diana Paper Company of Harrisville, New York;

Crown-Willamette Pulp & Paper Company of Oregon City, Oregon, and Camas, Washington, and the

Tidewater Paper Mills Company of Brooklyn, New York.

Q. 8. What has been the practice of the Eibel Process Company as to marking "Patented" the machines licensed under the invention?

A. The company has always furnished to its licensees brass plates giving the date of the patent in suit to Eibel, February 26, 1907, for attachment to the machines, and each licensee has been required to attach the plate to these machines.

Cross Examination by Mr. PAUL.

X-*Q.* 9. Please state what your duties are as agent of the Eibel Process Company, plaintiff in this case.

A. To grant licenses under the Eibel patent to such paper manufacturers as desire them, to look after the collecting of royalties.

X-*Q.* 10. Is that all?

A. That is supposed to be my business; yes.

X-*Q.* 11. What is the business of the Eibel Process Company?

A. The granting of licenses under the Eibel patent.

X-*Q.* 12. It has no other business?

A. That was the original business, the sole business, from the time I became connected with the company.

X-*Q.* 13. How long have you been connected with the Eibel Process Company?

A. Since September, 1909.

X-*Q.* 14. What is the nature of the engineering work that you had been doing in connection with paper machines prior to your connection with the plaintiff?

A. I had been an agent of the Reeves Pulley Company of Columbus, Indiana, and one of the principal applications of a variable speed counter-shaft which I handled was the paper machine, and this necessitated frequent visits to paper mills. After that I was an engineering salesman for Cell-Drier Machine Company of Taunton, Massachusetts, and I visited a considerable number of paper machines with the idea of applying a felt drier to them.

X-*Q.* 15. Is that the extent of your engineering work in connection with paper machines prior to your connection with the plaintiff company?

A. The duties of those two positions represent practically the extent of my experience with the Fourdrinier machine. I had previously had a slight experience with a cylinder machine in an engineering capacity.

X-*Q.* 16. You had had no experience in designing, erecting or operation of Fourdrinier machines prior to your connection with the plaintiff company?

A. None whatsoever.

×-*Q.* 17. Describe the engineering work that you have done in connection with paper machines since your connection with the plaintiff company.

A. I have had but little engineering work to do since becoming agent of the Eibel Process Company apart from experimental work in connection with the formation of paper on the wire.

×-*Q.* 18. Would you really call the work that you have done in connection with paper machines both before and after your connection with the plaintiff company "engineering work"?

A. Most certainly I should.

×-*Q.* 19. In what way was the work that you did in connection with such machines prior to your connection with the plaintiff company engineering work?

A. I had to arrange for the driving of paper machines, a very important part of the engineering work called for in connection with the machines.

×-*Q.* 20. You mean by that that you were given the speed at which it was desired to run a certain machine and you arranged the pulleys, etc., to produce that speed?

A. Yes, sir, I did.

×-*Q.* 21. In what way is the work that you have been doing since your connection with the plaintiff company "engineering work"?

A. I have had calculations to make on the amounts of pitch required for different paper machines.

×-*Q.* 22. What has been the nature of these calculations?

A. They have been mathematical computations.

×-*Q.* 23. For what and of what?

A. For the Fourdrinier machines.

×-*Q.* 24. What did you compute, the speed of the wire, the speed of the stock, or what?

A. The speed of the stock, the amount of pitch required to give them the advantage of the Eibel invention.

×-*Q.* 25. How do you go to work to figure out these matters as

stated in your last answer to give a machine the advantage of the Eibel invention?

A. I am told the head that it is proposed to use and the speed of paper that is desired. With this information I can tell the amount of acceleration required and the angularity of the wire necessary to cause this acceleration.

X-*Q.* 26. How many factors enter into the calculation necessary to obtain in any machine the advantages of the Eibel invention? In other words, do you need to know anything more than the head it is proposed to use and the speed of paper that is desired — if so, what else do you need to know?

A. I need to know the length of the wire and I would ordinarily assume average conditions for the condition of the stock.

X-*Q.* 27. When did you make the numerous determinations of the effect of gravity on the stock with machines running at various pitches and at various speeds, referred to in your answer to Q. 2?

A. In 1911 and 1912.

X-*Q.* 28. With machines running at how many different pitches?

A. From 10 inches up to 18 inches.

X-*Q.* 29. And at what different speeds?

A. Speeds of about 460 to about 600.

X-*Q.* 30. Did you use the same head in all of these determinations?

A. No; the head varied from approximately 4½ inches up to about 7¾ inches.

X-*Q.* 31. What variation in pitch, speed and head did you find you could use and still get the advantages of the Eibel invention?

A. I do not look upon the amount of head carried as a part of the Eibel invention, the invention of Mr. Eibel being concerned with the speed of the stock after it enters upon the wire, and the velocity with which it is necessary to accelerate it by gravity due to the pitched wire.

X-*Q.* 32. What variations in pitch and speed can be employed and still obtain the advantages of the Eibel invention?

A. I don't think any exact amount of variation can be stated. The pitch must be sufficient to bring about a correlation between

the speed of the stock and the speed of the wire before the drainage has proceeded so far that the fibres have lost their freedom of movement.

×-*Q.* 33. What do you mean by correlation between the speed of the stock and the speed of the wire?

A. I mean the equality of speed between the two.

×-*Q.* 34. Then do I understand that to obtain the advantages of the Eibel invention there must be an exact equality between the speed of the stock and the speed of the wire before the fibres have lost their freedom of movement?

A. The stock and wire must be going at practically an identical speed at that time in order that a good formation may be obtained.

×-*Q.* 35. What do you mean by "practically an identical speed"; that is, how much may the variation between the speeds of the stock and the wire be and fall within your definition of "practically an identical speed"?

A. The fibres become attached to the wire and travel at the identical speed of the wire. If at any time during the course of the stock down the wire it attains a speed in excess of the wire it indicates that the pitch of the wire was too great. If the stock does not smooth out until the web is well down toward the suction boxes, it indicates that the pitch was too little for the head of the stock that was carried.

×-*Q.* 36. What I am trying to get at, Mr. Aldrich, is to ascertain from what amount of variation there may be between the speed of the stock and the speed of the wire, and have the same come within this correlation that you speak about.

A. Of course the speed equality must be obtained somehow. If not obtained by head on the slice and pitch of the wire, it is left for the drag of the wire upon the stock to bring this about. Now, if the acceleration of the stock from the time it leaves the slice to the time it reaches the speed of the wire has been substantially brought about by the declining wire, I would consider that the Eibel invention has been made use of.

×-*Q.* 37. But I would like to know how much variation there may be between the speed of the stock and the speed of the wire

down to the point where the fibres lose their freedom of movement, and the operation still be within the Eibel patent.

A. The making of paper is not an exact science as the stocks that are employed vary a great deal and it would be impossible to say just how much variation could be allowed.

X-*Q.* 38. You understand, however, that there may be considerable difference between the speed of the stock and the speed of the wire down to the point where the fibres lose their freedom of movement and all the advantages of the Eibel invention may still be obtained; is that right?

A. Quite right. In the employment of the Eibel invention there is always this difference in speeds between the movement of the stock and of the wire at the beginning of the travel of the stock down the wire. There would be no Eibel invention if this were not so.

X *Q.* 39. Either my question is not clear or you do not understand it. I am not asking about the difference in speed at the beginning of the downward movement of the stock, but my question relates to the difference in speed at the point where the fibres lose their freedom of movement or immediately prior to that point, and I desired to know whether this correlation between stock and wire that you speak of means that the stock before the fibres lose their freedom of movement must attain exactly the same speed of the wire in order that you may have the advantages of the Eibel invention.

A. It would be impossible to say exactly how much difference in speed there would have to be to cause a visible wave of the stock down the wire, but if waves extend close down to the suction boxes it is certain that the sheet is unevenly formed and poorly put together.

X-*Q.* 40. You concede, then, that a sheet may be well formed with some difference in speed between the stock and the wire, do you not?

A. No; the sheet is never well formed as long as there is any difference of speed between the two.

X-*Q.* 41. Then, as I understand you, the stock before the fibres lose their freedom of motion must attain the exact speed of the wire in order to have the sheet well formed; is that correct?

A. Absolute freedom of motion; yes.

×-*Q.* 42. Did you find that with machines running anywhere from a 10-inch pitch up to an 18-inch pitch and at speeds from 460 to about 600 you obtained in every case the advantages of the Eibel invention?

A. Yes.

×-*Q.* 43. Have you ever made any determination with machines having less than the nine-inch pitch as to whether the advantages of the Eibel invention were obtained?

A. I never have.

×-*Q.* 44. Then you do not know whether the advantages of the so-called Eibel invention would be obtained if a machine were used with less than a nine-inch pitch?

A. Yes, I do, because I can tell about how much acceleration can be expected with lesser pitches. Other conditions being right, a smaller pitch than nine inches can constitute the Eibel invention as well as nine inches or above.

×-*Q.* 45. How small?

A. I should say six inches might be the Eibel invention.

×-*Q.* 46. Is six inches the limit?

A. I would not say that less than five inches would constitute the Eibel invention because something approximating that has been shown to have been in use previously, but for the different purpose of drainage.

×-*Q.* 47. How great a pitch had been used before the Eibel invention that you refer to in your last answer?

A. I do not know, but two or three inches have been claimed to have been used. Since such pitches might possibly have been reached with the adjustable breast rolls that have been used, I have no reason to dispute those claims.

×-*Q.* 48. Is it your understanding that a five-inch pitch would constitute the Eibel invention?

A. Not necessarily, but it might be on the border line.

×-*Q.* 49. What about a four-inch pitch?

A. I would hardly say so. In a pitch as small as that the drag of the wire on the stock might be nearly as effective in increasing

the acceleration as a pitch as small as that, unless the wire were a very short one.

X-*Q.* 50. You base that answer upon a matter of speculation upon your part, do you not?

A. I have never observed the effects of a four-inch pitch on the wire.

X-*Q.* 51. What is the smallest pitch on the wire that you have ever observed?

A. I really could not say.

X-*Q.* 52. What is the smallest that you recall at this time?

A. I do not seem to have any clear recollection so that I am able to state where I have seen the machine where the pitch has been smaller than the 10 inches which I have experimented with, although I probably have seen such machines.

X-*Q.* 53. You do not know that the drag of the wire on the stock with a five-inch pitch would be as effective in increasing the acceleration as the pitch of the wire, do you?

A. Of course, the drag of the wire is a varying force increasing as the water drains from the stock. I would say that at the beginning of the stock down the wire a five-inch pitch would have more effect in acceleration than the drag of the wire, but the difference is not so marked further down.

X-*Q.* 54. You would have an acceleration of the stock as it travelled down the wire with a five-inch pitch, would you not?

A. Certainly; you would have it with a two-inch pitch also.

X-*Q.* 55. And the difference in the acceleration with a five-inch pitch and a six-inch pitch would be merely one of degree, would it not?

A. Yes.

X-*Q.* 56. And that would be true, also, of a two-inch pitch and a six-inch pitch?

A. Gravity would certainly act the same with a one or two-inch pitch as with a six-inch pitch.

X-*Q.* 57. Did you not see the two machines at the Kimberley-Clark mill at Neenah in the latter part of May?

A. I did.

×-*Q.* 58. They were operating with less than a nine-inch pitch, were they not?

A. They were.

×-*Q.* 59. What was the pitch on those machines; do you remember?

A. Subject to the notes which I made which I have not with me, I should say it was about five and three-quarters inches; that is my recollection.

×-*Q.* 60. Do you remember the speed at which they were running?

A. My recollection is about 340 or 350 feet, but I am not sure.

×-*Q.* 61. Assuming that your recollection as to the speed and pitch is correct, were they using the Eibel invention?

A. I could not state; I do not recollect the head on the slice; the length of the wire; I would not want to say.

×-*Q.* 62. What would you need to know more than the pitch and speed to determine whether they were using the Eibel invention?

A. I would need to know the head on the slice and if the stock is smoothing out properly on the wire.

×-*Q.* 63. Why would you need to know the head on the slice to determine whether these machines were using the Eibel invention?

A. If the head on the slice was sufficient to cause the stock to issue at the speed of the wire, I should know at the outset that they were not.

×-*Q.* 64. If the head on the slice was insufficient to cause the stock to issue at the speed of the wire, then would you say that the machines were constructed in accordance with and embodied the Eibel invention?

A. I have stated that five or six inches might constitute the Eibel invention, and that if this pitch is the predominating factor in getting the stock as it issues upon the wire to the speed of the wire it would seem to be the Eibel principle.

×-*Q.* 65. It wouldn't make any difference in determining whether these Kimberley-Clark machines embodied the Eibel invention that they ran only at 340 or 350 feet per minute, would it?

A. No; if all other conditions were right to bring about speed equality early on the wire.

×-*Q.* 66. And what other conditions do you refer to?

A. The pitch and the head.

×-*Q.* 67. What does the head have to do with the Eibel invention?

A. The lower the head the more pitch is required.

×-*Q.* 68. How small a pitch do you think might be used on machines of the kind you are considering if a sufficiently large head were employed?

A. No pitch at all.

×-*Q.* 69. You could get the same result without any pitch if you have a sufficiently high head; is that right?

A. As far as speed equality is concerned you could, but I would consider that the effect upon the formation of the paper would be different.

×-*Q.* 70. Did you ever see a machine used with a very high head and no pitch at all?

A. I do not recollect seeing at any time a higher head used than seven and three-quarters inches.

×-*Q.* 71. And what amount of pitch was used with that head?

A. No pitch.

×-*Q.* 72. Did the machine make paper?

A. No, it did not, because I ran it at too high a speed to make paper. It made paper, but a poor paper, one that was constantly breaking down on the machine.

×-*Q.* 73. At what speed did you run it?

A. 580 feet a minute. It was unmarketable paper.

×-*Q.* 74. Do you think it entirely feasible to use a three or four-inch pitch on a Fourdrinier machine if you use sufficiently high head?

A. What do you mean by high head?

×-*Q.* 75. I leave it to you to determine whether you would get a sufficiently high head that would be practicable.

A. I see no reason why a three or four-inch pitch on the wire would do any harm in connection with a high head.

×-*Q.* 76. That would be a perfectly practical way of making paper, would it not?

A. It might satisfy some paper-makers.

×-*Q.* 77. Do you know whether you could make satisfactory paper with that amount of pitch if you used a sufficient amount of head?

A. I should not expect the paper to be so strong in a transverse direction.

×-*Q.* 78. If you were going to use a six-inch pitch, what amount of head would you use with it?

A. It would depend upon how fast I wanted to run my machine.

×-*Q.* 79. Assume that you wanted it to run at 500 feet per minute.

A. I am not a paper-maker and I would not say in advance how much head I should use, but I would use enough of a head in connection with a six-inch pitch and the drag on the wire to cause the stock to smooth out early upon the wire without waves and ripples being formed.

×-*Q.* 80. As I understand your testimony, the numerous determinations of the effect of gravity on the stock with machines running at various pitches and at various speeds that were made by you were all confined to pitches between 10 and 18 inches and speeds between 460 and about 600; that is correct, is it not?

A. Yes.

×-*Q.* 81. Did you find any difference between the 10-inch pitch and the 18-inch pitch in the operation of the machine?

A. Yes; I found that with the 10-inch pitch and 460-feet speed the point of speed equality was brought about a little earlier on the wire than in the case of the 18-inch pitch and 580-feet speed.

×-*Q.* 82. Did you try the 10-inch pitch and the 18-inch pitch both with the same speed of wire?

A. No; they were different machines and in different mills at different times.

×-*Q.* 83. What about the amount of head; was it the same?

A. My recollection is that in the case of the 10-inch pitch the head was about four and a half or four and three-quarters inches,

and in the case of the 18-inch pitch machine it was six inches. There was quite a difference in the dilution of the stock, however. In the former case it was about 135 pounds of water to one pound of stock, and in the latter case about 200 pounds of water to one pound of stock. This would account partially at least for the speed equality being brought about at an earlier point on the wire.

X-*Q*. 84. What are the limits in the position on the wire at which it is practicable to bring about speed equality between the stock and the wire and have the machine do satisfactory work?

A. In the case of the 70-foot wire I would say that about 9 or 10 feet would be all right, or a little earlier would do no harm.

X-*Q*. 85. How much earlier?

A. Well, I have seen it eight feet or so with good results in the case of 70-foot wires.

X-*Q*. 86. And how late may it be, how far down the wire?

A. I do not know just how late it might be. I know that results were very bad at 16 feet down the wire.

X-*Q*. 87. How do you know that?

A. From an experiment which I conducted.

X-*Q*. 88. How do you determine that the speed with which the stock will flow to the wire will be substantially 200 feet per minute with a head in the flow-box of two and one-quarter inches?

A. From the well-known formula in hydraulics.

X-*Q*. 89. You get that figure from some engineering book and not by measurements made by yourself personally?

A. I have checked it up by measurements made by myself personally, not with a two and one-quarter inch head, but with a higher head.

X-*Q*. 90. What is the amount of head that is generally used for news print machines according to your observation at the present time?

A. I would say about five or six inches head. That is, I think I have seen a head of five or six inches more frequently than any other, but I am not satisfied that that is always the best head to carry.

X-*Q*. 91. Which do you think would be better, more or less?

A. I would say a low head, which gives a slower, thicker stream of stock upon the wire.

×-*Q.* 92. With a five or six inch head what would be the speed at which the stock enters upon the wire?

A. You mean for the bottom layer of stock or the average thickness of stock on the wire?

×-*Q.* 93. Whatever you considered when you gave this speed of 200 feet for a two and one-quarter inch head, which I find on referring to your testimony was the bottom of the stream.

A. A six-inch head would be about 325 or 330 feet per minute, a five-inch head about 300 feet per minute.

×-*Q.* 94. With the six-inch head, a 14-inch pitch and a wire speed of 600 feet a minute, at what point on the wire would you get speed equality between the stock and the wire?

A. Probably not far from 10 feet below the slice.

×-*Q.* 95. With a six-inch pitch, a six-inch head and speed of 600 feet a minute, at what point would you get speed equality between the stock and the wire?

A. I couldn't say offhand. In the case of a 14-inch pitch with a quick stock or one with the dilution not great I think the point of equality might often be found at about eight feet from the slice.

×-*Q.* 96. But if the point of equality were found eight feet from the slice would not the stock go faster than the wire at some point below the eight feet?

A. I think not.

×-*Q.* 97. Why not?

A. It would be no more likely to in one case than the other because of the difference in stock.

×-*Q.* 98. You say that gravity would accelerate the speed of the stock from about 300 feet per minute where it came on the wire to 600 feet per minute in a travel of eight feet.

A. No, I didn't say that, because the wire would not travel at the rate of 600 feet per minute.

×-*Q.* 99. I thought my question assumed a speed of 600 feet per minute.

A. I understood you to say the speed of the paper.

X-Q. 100. Have you answered all of the questions on the assumption of the speed of the paper at the calender rolls?

A. Yes.

X-Q. 101. And the speed of the wire would be about 10 per cent less.

A. Possibly eight per cent would be nearer; eight or 10 per cent.

X-Q. 102. Then you have assumed in answering X-Q. 94 and 95 a wire speed of practically 550 feet per minute?

A. Yes.

X-Q. 103. And a paper speed of 600 feet?

A. Yes.

X-Q. 104. Then, as I understand you now, with a six-inch head the stock would come upon the wire at a speed of about 325 or 330 feet per minute, and with a pitch of 14 inches and a wire speed of 550 feet per minute the point of equality of speed between the stock and the wire would be found at about eight feet from the slice?

A. In some cases I think it would be as little as eight feet, but I think it would be as much as 10 in other cases, and perhaps in other cases it would exceed even this slightly.

X-Q. 105. But you are unable to state where it would be found if the pitch were decreased to six inches, the head and other conditions remaining as before?

A. No one could say in advance absolutely. I could, however, make computations that would probably give a close approximation, but it would necessitate a good deal of figuring which I am not able to do in my head at this time.

X-Q. 106. Do you think it would come at some point between the slice and the suction boxes?

A. If I had good luck.

X-Q. 107. And on a machine such as you have been considering in answering these last few questions what is the usual distance between the slice and the first suction box?

A. About 18 or 19 feet.

X-Q. 108. Now I would like to have you state why, when you employ a six-inch head, a wire speed of 550 feet, a 14-inch pitch and get a speed equality between the stock and the wire at eight

feet from the slice, gravity does not continue to accelerate the speed of the stock and cause it to travel faster down the wire below the eight-foot point.

A. Because at that point the wire itself instead of gravity predominates in the control of the velocity of the stock on the wire.

×-*Q.* 109. How do you know that?

A. I found it so by experiment.

×-*Q.* 110. Experiment made with the speed, head and pitches stated in X-Q. 108?

A. Yes, I have.

×-*Q.* 111. How did you make that experiment?

A. By a machine having a pitch of 14 inches and paper speed of about 590 feet per minute, with a head as I recollect it of about six inches.

×-*Q.* 112. Well, how did you determime the speed below the eight-foot point?

A. By photography.

×-*Q.* 113. Explain how you did it.

A. I had a special camera with two lenses, a stereoscopic camera, with especially quick lenses, and then by dropping light paper targets on the stock and having equally spaced spots painted on the edge of the wire beyond the deckle strap a series of photographs was taken by the targets coming along the wire in pairs of observations a small fraction of a second apart, which I could do with the special camera. I also had a wooden scale with one-foot divisions upon it clamped to the table rails so that in each photograph I could see the distance travelled by the paper targets and the spots on the wire. Then, knowing the fixed speed at which the wire was traveling, I could tell at any instant the speed at which the targets were traveling by comparison.

×-*Q.* 114. You found for a distance of eight feet the speed of the stock was accelerated and after eight feet it was constant?

A. I did, for that particular machine.

×-*Q.* 115. Are you able to produce those photographs?

A. I could of a machine very similar having an 18-inch pitch and with speed equality about nine or ten feet down from the slice.

X-*Q.* 116. Will you produce them?

A. I will produce them, but cannot at this moment.

X-*Q.* 117. Will you produce them tomorrow morning?

A. I think so.

X-*Q.* 118. You say in your direct examination that —

> "Long previous to the date of the Eibel patent it was a common practice in the art to construct paper machines so that the portion of the frame carrying the wire from the breast-roll to the suction boxes was capable of a small of vertical adjustment at the breast-roll end by virtue of which it was possible to depress the wire at this point an inch or two below the horizontal or to raise it an inch or two above the horizontal and such adjustments were sometimes made in practice."

Wasn't it common to construct machines that were capable of vertical adjustment at the breast-roll end of considerably more than one or two inches?

A. I don't think it was designed for much more than that. I think in some cases a little more might be obtained.

X-*Q.* 119. How much more?

A. Where there would be a difference of opinion as to how much of a thread should remain in the nut when adjusted to the limit.

X-*Q.* 120. How much more?

A. I could not say. Bagley & Sewell, Pusey & Jones, Beloit Iron Works seem to have constructed them with adjustments of about one and one-half and one and three-quarters inches above and below the level. I am unable to say by actual experience myself as to the degree of adjustment.

X-*Q.* 121. Upon what do you base your statement in the direct examination which I have quoted in X-Q. 118?

A. I have heard statements of machine builders themselves in regard to the Bagley & Sewall and Beloit machines and have seen specifications of Pusey & Jones.

X-*Q.* 122. Then these questions quoted in X-Q. 118 are not based upon any matter of personal knowledge in the practice of the art?

A. Not from actually having made the machine adjustments myself.

×-*Q.* 123. Or seen them in operation for the purpose stated?

A. Not that I recall.

[Adjourned to 9.30, September 19, 1917.]

BOSTON, MASS., September 19, 1917.

×-*Q.* 124. The statement in your direct examination that I have copied in X-Q. 118 relating to the prior art is quoted by you from Mr. Little's deposition in the Remington-Martin suit, is it not?

A. Yes.

×-*Q.* 125. As a matter of fact, some of those earlier machines were constructed so as to be capable of an adjustment of at least three or four inches above the horizontal, were they not?

A. Not to my knowledge. I examined a considerable number of patent drawings and it did not seem as though as much as that was contemplated.

×-*Q.* 126. In those machines that you examined what change would be required to permit an adjustment of three or four inches above the horizontal?

A. There would have to be changes in the dimensions of the adjusting apparatus, and provision would have to be made for adjustment of the suction boxes.

×-*Q.* 127. Can the advantages of the Eibel invention be obtained in any machine without adjusting the suction boxes?

A. The advantages could be obtained if the suction boxes were on a permanent decline of sufficient amount instead of being in a horizontal position.

×-*Q.* 128. But assume that the breast roll of such a machine as we are considering were adjusted five inches above the level and the suction boxes remained horizontal, could the machine be operated so as to obtain the advantages of the Eibel invention?

A. As far as the Eibel invention is concerned it would make no difference what position the suction boxes were in, but I do not believe that this would work in practice.

×-*Q.* 129. The suction boxes could remain horizontal and the

breast roll be adjusted above the horizontal so as to pitch the wire and the machine work practically so long as the wire did not leave the suction boxes — that is correct, is it not?

A. Well, the Eibel invention is not concerned with that portion of the making wire where the suction box is located.

X-*Q.* 130. And the Eibel invention might be found in a machine in which the suction boxes remained horizontal and the wire from the breast roll to the suction boxes was pitched?

A. As far as the pitch is concerned it could be; yes.

X-*Q.* 131. And I think you have testified that the Eibel invention might be found in a machine having a pitch not to exceed five inches, a five-inch elevation at the breast roll?

A. I have testified that all other conditions being right that perhaps the five inches might be on the border line of where the Eibel invention commenced, as this point was considerably beyond what had been attempted before.

X-*Q.* 132. Do you think that a four-inch elevation would not give the advantages of the Eibel invention?

A. I would say that four inches as a rule would not be an advantageous application of the Eibel invention.

X-*Q.* 133. But you might operate the Eibel invention with a four-inch elevation of the breast roll?

A. I hardly think that four inches could be considered as a substantial pitch.

X-*Q.* 134. Why not?

A. Because Eibel in his specifications attempts to differentiate the pitch that he has in mind from what had been previously used when he specifies that it is to be substantial.

X-*Q.* 135. Now assume that you have a machine with a five-inch pitch in which you are operating and using the Eibel invention. As I understand you, the speed of the stock would be accelerated and you would in operating the machine according to the Eibel method get a speed equality between the stock and the wire at some point between the breast roll and the suction boxes. That is correct, is it not?

A. Always between the breast roll and suction boxes regardless of whether there is any pitch at all on the wire or not.

×-*Q.* 136. Now, assuming that you are operating this machine in accordance with the Eibel invention with a five-inch pitch, you would then get speed equally between stock and wire at some point between the breast roll and the suction box?

A. Yes; and you would get it also with a horizontal wire.

×-*Q.* 137. Suppose that in that same machine the breast roll were dropped one inch, thus decreasing by one inch the amount of pitch, maintaining the same head and the same speed of wire, what would be the effect on the point at which you would obtain speed equality between the stock and the wire; would it carry it nearer the suction boxes?

A. It would carry the point nearer the suction boxes.

×-*Q.*138. Can you say how much nearer?

A. No; I wouldn't want to attempt to say; I have never experimented with it.

×-*Q.* 139. In both cases, that is with either a five-inch pitch or a four-inch pitch, then there would be an acceleration in the travel of the stock due to gravity as it passed down the wire, would there not?

A. Yes; or even with a one-inch pitch.

×-*Q.* 140. And in every case you could operate the machine so as to give the wire a speed that would bring about speed equality between the stock and the wire at some point between the breast roll and the suction boxes, could you not?

A. I think that this is so, if the slight advantage which this would give had been appreciated.

×-*Q.* 141. In your direct examination you say: —

> "There was no recognition or utilization of any gravity effects upon the stock as influencing or concerned with the relative speed of stock and wire, or as bearing upon the speed possibilities of the machine";

that statement is also quoted from Mr. Little's deposition, is it not?

A. Yes.

×-*Q.* 142. You don't mean to suggest that there were not the same gravity effects upon the stock when a pitched wire was used,

do you; that is, when a pitched wire was used in machines prior to the date of the Eibel invention?

A. The effect of gravity was always there regardless of how small the pitch was.

X-*Q.* 143. And accelerated the stock in just the same way?

A. In a small degree it did; yes.

X-*Q.* 144. Do you not think that in the earlier machines, that is machines prior to Eibel, where they had a pitch to the wire, they got some increase in speed of the machine?

A. What do you mean?

X-*Q.* 145. Don't you think they were able to operate the machines faster where they had some pitch to the wire than where the machines were run with the wire horizontal?

A. I think if this fact had been recognized that perhaps a slight increase would have been possible because of it.

X-*Q.* 146. Don't you think they actually did run the machines faster when they used the pitch than had been the practice previously when no pitch was used?

A. Going how far back in years?

X-*Q.* 147. Going back any number of years — just prior to the date of the so-called Eibel invention.

A. I have no reason for thinking so, because apparently there were cases of running just as high speed with a horizontal wire as there were with the insignificant pitches which were in effect on some machines.

X-*Q.* 148. But it is a fact that when these insignificant pitches, as you call them, were used they got a better formation of the sheet than they did when the wire was horizontal; is that not so?

A. I don't see how I can answer that question.

X-*Q.* 149. Was it not recognized that prior to the Eibel invention that there was a relation between speed and the amount of pitch to be given to the wire in a Fourdrinier machine?

A. No; I don't think so.

X-*Q.* 150. Are you familiar with a book entitled "Practical Paper Making", by George Clapperton, published in London by Crosby, Lockwood & Sons, 7 Stationers Hall Court, Ludgate Hill, Edition

1896, page 93, of which I show you a photostatic reproduction of pages 92 and 93?

By Mr. LYMAN. Question objected to as calling for subject-matter not referred to in the direct examination, and counsel is warned that in pursuing this line of inquiry he makes the witness his own.

By Mr. PAUL. Attention is called to the fact that the witness has in his direct examination discussed the adjustments of the prior art and the results obtained from such adjustments. Particular attention is called to pages 11 and 12.

A. I recollect having read this many years ago.

×-*Q.* 151. And you find this statement "The speed must also determine the amount of pitch to be given to the wire" on page 93 of this book, do you not?

A. Yes.

By Mr. LYMAN. I ask that Mr. Paul read the sentence in the book following that one which he has put upon the record.

By Mr. PAUL. The portion of the text referred to by counsel for plaintiff reads as follows: —

"A 40-foot wire, travelling up to 100 feet a minute, will require a pitch of about ¾ of an inch from the breast-roll to the first guide-roll, while if driven at a speed of 200 feet a minute a 1¼ inch pitch will be necessary."

×-*Q.* 152. You say in your direct examination:

"Eibel, however, placed his finger on the vital point of the difficulty, and conceived a method of avoiding it which has been brilliantly successful."

What do you mean by "method" of avoiding it as you use the word "method" in this part of your statement?

A. Giving the wire a substantial pitch.

×-*Q.* 153. And by substantial pitch you mean a pitch of how much?

A. I mean beyond what had been known in the art previously.

×-*Q.* 154. Would you make the definition of a substantial pitch depend upon what had been used before? For instance, if five

inches had been used before would you say that a substantial pitch was something over five inches?

A. I think Eibel had in mind something beyond what had been used before.

X-*Q.* 155. Regardless of what that was?

A. Yes; even if that amount had ever been used, Mr. Eibel was unacquainted with the fact.

X-*Q.* 156. If you can get the same result by the same mode of operation with a four-inch pitch, then you would consider that a substantial pitch, would you not?

A. No; in that case there would be no point of application for the Eibel invention.

X-*Q.* 157. We have spoken in this examination of the amount of pitch in terms of inches, and you have understood this referred to the amount of elevation of the breast-roll end of the wire, have you not?

A. I have.

X-*Q.* 158. When you have spoken of an amount of pitch in inches of elevation at the breast roll what length of wire have you had in mind?

By Mr. LYMAN. I think the witness' attention ought to be called to particular portions of his testimony rather than asking him an indefinite question like this.

By Mr. PAUL. I call your attention first to that portion of your direct examination found at page 17 where you say: —

"The drawing which forms a part of the specification shows the wire with an inclination of about four per cent or 12 to 13 inches for a wire of ordinary length."

And to X-Qs. 28, 42 to 46, 53 to 56, 80 to 83.

A. I would refer to wires of a length between 60 feet and 70 feet. A 70-foot wire was the extreme length in the days of the Eibel invention. There were lots of wires 60 and 65 feet long. In the machine to which I refer having a 10-inch pitch I think the wire was either 60 or 65 feet long. The one having an 18-inch pitch had a wire 70 feet long.

×-*Q.* 159. When you speak in your direct examination of the earlier machines in which it was the practice to raise the wire "say an inch or two" at the breast roll, what was the length of the wire in the machines there referred to?

A. I know very little about the length of wires in use previous to 1905 or 1906, but I have no doubt that lots of machines had 55-foot wires.

×-*Q.* 160. Many of the earlier machines had wires not exceeding 40 to 48 or 50 feet, did they not?

A. I think about the shortest wire that I ever heard of was 40 feet long.

×-*Q.* 161. Now, you have stated, I think, that a machine having a five-inch pitch would be about on the border line of the Eibel invention, have you not?

A. Yes, sir.

×-*Q.* 162. And you had in mind a five-inch elevation at the breast roll on the 65 or 70-foot wire?

A. I don't know that I had in mind any particular length of wire when I made that statement.

×-*Q.* 163. Would you limit it to any particular length of wire?

A. I would limit it to the longer lengths, say 55 to 70 feet. Perhaps even less than 55 feet.

×-*Q.* 164. The pitch of the wire is determined by the elevation at the breast roll and the length of the wire, is it not?

A. Yes.

×-*Q.* 165. With the same elevation you get a steeper pitch with a short wire than you do with a long wire?

A. Yes, sir.

×-*Q.* 166. Can you state the limit of pitch of wire required for the Eibel method in degress of inclination of the wire, or the extent of the angle of elevation at the breast roll?

A. I think it would figure out roughly at about one degree.

×-*Q.* 167. In your testimony in the Remington-Martin suit as appears in the record which has been furnished me by counsel for plaintiff I find this testimony:

"*Cross-Int.* 61. Would a paper-making machine embody the invention of the Eibel patent if the angle of declination of the wire were 60 minutes or one degree? *A.* It might, but it would not have any substantial effect in carrying out the Eibel principle if the machine were, for instance, running 700 or 800 feet per minute."

That is a correct report of your testimony, is it not?

A. Yes, sir.

X-*Q.* 168. What elevation in inches of the wire did you have in mind as corresponding to the 60 minutes or one degree declination?

A. I think it was about five inches.

X-*Q.* 169. You also testified, as appears from the same record, as follows: —

"*Cross-Int.* 65. Would a paper-making machine embody the invention of the Eibel patent if the angle of declination of the wire were 42 minutes? *A.* I would say not."

That is a correct report of your testimony, is it not?

A. Yes.

X-*Q.* 170. What elevation in inches of the making wire did you have in mind in giving this answer?

A. About three-quarters as much as before.

X-*Q.* 171. And in both instances what length of wire did you have in mind?

A. I must have had at least a 70-foot wire in mind if I were speaking of speeds of 700 or 800 feet a minute.

X-*Q.* 172. You frequently refer in your direct examination to the Eibel process. What do you mean by the Eibel process?

A. I mean a method of paper making whereby gravity by means of a declining wire is called into play as the substantial factor in correlating the speed between stock and wire.

X-*Q.* 173. And you consider that this process is used in any Fourdrinier machine when the making wire is given a pitch produced by substantially a five-inch elevation at the breast-roll end of a 65 or 70-foot wire, do you?

A. I think sometimes that amount of pitch might have been used

without having any decidedly beneficial effect. If that amount of pitch should cause an increase of relative velocity between stock and wire instead of a decrease, it would certainly not be the Eibel invention.

×-*Q.* 174. Under what circumstances do you think that amount of pitch might cause an increase of relative velocity between stock and wire?

A. Where the head was so high and speed of wire so low that it was not necessary.

×-*Q.* 175. Then I take it that you consider that the Eibel invention consists in the particular manner in which a Fourdrinier machine is operated and not in the construction of the machine itself; is that right?

By Mr. LYMAN. Question objected to as it calls for a construction of the claims of the patent by the witness.

A. It depends on whether it is accomplishing the purpose for which it was intended.

×-*Q.* 176. In other words, one might have a Fourdrinier machine arranged with a wire having the necessary pitch, and that machine might or might not be operated to embody the Eibel invention?

Mr. LYMAN. Same objection.

A. That is the idea.

×-*Q.* 177. So that invention does not consist, according to your idea, in the way or manner in which the machine is operated?

Mr. LYMAN. Same objection.

A. Invention, according to my way of thinking, consists in exactly the way I stated when I answered your question as to what the Eibel process really is.

×-*Q.* 178. That is, in substance that it consists in the manner of operating a Fourdrinier machine; is that not so?

A. That is involved.

×-*Q.* 179. You may have a Fourdrinier machine arranged so as to by its operation carry out the Eibel invention, or you may use the same machine so as not to carry out the invention?

A. Yes, sir; I would say so.

X-*Q.* 180. So that the invention is not in the machine, but in the way in which it is operated?

Mr. LYMAN. Same objection.

A. It is in both.

X-*Q.* 181. But it does not depend upon the machine, but upon the way in which you operate the machine?

Mr. LYMAN. Same objection.

A. I don't know how to answer that any differently than to say it is in both.

X-*Q.* 182. And the reason that these earlier machines that you refer to in your direct examination did not embody the Eibel invention was not because of their construction but because of the manner in which they were operated. That is right, is it not?

A. Both; they were not constructed with a substantial pitch, and I have no reason to think that they were operated in such a manner as to embody the Eibel invention.

X-*Q.* 183. But I understood you to say that some of those earlier machines even if they had a five-inch pitch were not operated for the purpose of carrying out the Eibel invention. Didn't you so testify?

A. Very likely I did.

X-*Q.* 184. Then if they were constructed with a five-inch pitch they were capable of carrying out the Eibel invention if they had been operated for that purpose, were they not?

A. Some of them might have been so operated if they had any substantial pitch.

X-*Q.* 185. Well, as I understand it, any Fourdrinier machine that is capable of having the breast-roll end of the wire given a five-inch elevation can be operated in accordance with the Eibel invention; is that right?

A. Why, if the machine is an operative machine and the Eibel invention commences at five or six inches and the machine is capable of that much elevation, of course it could operate on the Eibel principle.

X-*Q.* 186. And anyone prior to Eibel who had an ordinary Fourdrinier machine capable of a five-inch elevation of the making

wire at the breast-roll end if he had understood the Eibel invention could have practiced that invention with such machine, could he not?

A. If he had understood the principle of the Eibel invention, I think he could have obtained some benefit.

×-*Q.* 187. And he could have carried out the Eibel process, as you call it, with such machine without any reorganization or change in the machine, could he not?

A. Not to the full, but he could have realized some advantage.

×-*Q.* 188. And that advantage would have been due to the Eibel invention or Eibel process, would it not?

A. That advantage would have been due to the pitch of the wire.

×-*Q.* 189. It would have been due to what you call the Eibel process, would it not?

A. If he had understood what Eibel understood, he might have commenced to get the advantages of the Eibel invention. Whether he did understand it or not would depend on the intelligent way in which he handled the machine.

×-*Q.* 190. Upon what do you base the statement in your direct examination that prior to and at the time of Eibel's invention 450 feet per minute was regarded as a very high speed, referring, I understand, to the Fourdrinier machines?

A. My own experience and what I have heard from superintendents and boss machine tenders.

×-*Q.* 191. Had you ever timed any of the machines that were modern machines between 1900 and 1905 or 1906?

A. No. I was not interested at all in the subject of paper making on the Fourdrinier wire until 1905.

×-*Q.* 192. Then you have no personal knowledge as to the speed at which machines constructed after about 1898 or 1899 were being operated prior to the date of the Eibel invention?

A. I have no personal knowledge of the speed of machines previous to 1905.

×-*Q.* 193. You have never seen the defendant's machines, have you?

A. I never have.

X-*Q.* 194. You understand that those are Pusey & Jones machines, do you not?

A. Yes, sir.

X-*Q.* 195. And you understand, also, that they are machines like those that were being constructed by Pusey & Jones Company prior to 1905, and that the inclination of pitch of the wire is obtained by placing inclined blocks under the machine standards?

A. I understand that.

X-*Q.* 196. As far as the machines themselves are concerned, it is your understanding that they are just the same as were being constructed by Pusey & Jones prior to the date of the Eibel invention, is it not?

A. I understand that this is so.

X-*Q.* 197. It is your understanding, is it not, that it was common to get a pitch to the wire of a Fourdrinier machine such as is referred to in your direct examination prior to the Eibel invention by placing inclined blocks under the standards of the machine?

A. I know that it has been claimed to have been done. I do not recollect ever having seen it.

X-*Q.* 198. And the difference between the arrangement of defendant's machine and these earlier machines having blocks under the standards, if any, is brought about by the difference in size of the blocks. That is true, is it not?

By Mr. LYMAN. The question is objected to as calling upon the witness to compare the defendant's construction with structures which are not proved nor even described in the case.

A. If all that is claimed to have been done is correct, why the pitch is accomplished in the same way.

X-*Q.* 199. You don't know personally whether the pitch that was given to the wire of such Fourdrinier machines prior to the Eibel invention that is referred to in your direct examination was obtained in any instances by the use of blocking under the standards of the machines?

A. No, I have no personal knowledge of it.

X-*Q.* 200. You say in your direct examination that it was the practice to raise the wire an inch or two at the breast roll so that

it had a slight downward inclination. What means for raising the wire did you there refer to?

A. The different methods as illustrated in patent drawings.

×-*Q.* 201. Your information from which this statement was based was obtained from the patent drawings?

A. Yes, and probably from remarks that I heard by superintendents and machine tenders.

×-*Q.* 202. Not from personal knowledge of the machines?

A. No, not from personal knowledge. I have heard a great deal of testimony indicating that it was a very common practice to have the wires run slightly up hill instead of down hill at the times referred to.

By Mr. PAUL. The last statement of the witness is objected to as volunteered and not responsive to the question.

×-*Q.* 203. You speak in your direct examination of paper being "wild" under certain conditions of operation of machines. Can you state a little more specifically what you meant by that?

A. Cloudy, uneven, and having a bad look-through, as the papermaker would call it.

×-*Q.* 204. Will you look at the sample of paper which I now hold up before you and state whether you consider that this paper is "wild" as you have used the term in your direct examination?

By Mr. LYMAN. The question is objected to on the ground that it relates in no way to the subject-matter of the direct examination, and the witness is instructed not to answer the question unless so ordered by the Court. The sample of paper which counsel offers may at some later stage of the case become material and in that event questions relating to it and its character will become material, but at the present time that sample of paper is not in evidence in the case and there is no reason in the direct examination for bringing it in.

A. I refuse to answer by advice of counsel.

×-*Q.* 205. Have you any other reason for refusing to answer?

A. No, except that I am not and do not claim to be a papermaker and I do not care to pass upon the quality of the paper.

By Mr. PAUL. Counsel for defendant objects to the instruc-

tion given to the witness on the ground that the question is in view of the direct examination of the witness entirely proper as cross-examination.

Mr. PAUL. I assume that *in view of the instruction* given on that question that if I should ask witness in regard to other samples of paper it might be considered that your statement would prevent the witness from answering other questions of the same character.

Mr. LYMAN. Yes, sir.

Counsel for defendant desires to have noted on the record that the sample of paper shown the witness is "Defendant's Exhibit J".

X-*Q*. 206. You have testified on direct examination that the defendant's machines, assuming them to have the pitch of wire and otherwise arranged as stated in the deposition of Mr. Gray, embodied the Eibel invention, as I understand your testimony?

A. Yes, I have.

X-*Q*. 207. Do I understand that you would be unable to tell from an examination of a sample of paper whether or not it had been produced on a machine using the Eibel invention?

A. I probably could not always tell from an examination of the paper how it was made, whether on a pitched wire or on a level wire.

X-*Q*. 208. And you couldn't tell from an examination of a paper whether it was wild or otherwise?

A. I could tell the difference between a well-formed paper and a poorly formed one.

X-*Q*. 209. If you had inspected the sample paper that I placed before you, could you have told whether it was well formed on not?

A. I think I could.

X-*Q*. 210. And if you had been informed of the speed at which the machine was running when that paper was produced could you have told whether or not the Eibel process had been employed in the production of the paper?

A. I probably could have told whether it had been successfully employed or not.

By Mr. PAUL. In view of this further testimony of the wit-

ness, counsel for defendant renews his request that the witness examine the sample of paper referred to as "Defendant's Exhibit J".

By Mr. LYMAN. Please tell him what the sample is.

By Mr. PAUL. I have stated that it is "Defendant's Exhibit J". I would like to have the witness examine it and state whether he considers that it is or is not well formed, if he can do so without being told anything further about it.

By Mr. LYMAN. I do not propose to have the witness called upon to pass judgment upon a lot of samples of paper which had nothing to do with his direct examination. If counsel wishes to have his opinion of this particular sample, I have no serious objection.

By Mr. PAUL. I would not care to limit it to one sample. I might want to ask him about more than one.

By Mr. LYMAN. Then my objection stands.

×-*Q*. 211. As I understand your testimony, if a paper manufacturer takes an ordinary Fourdrinier machine such as was in common use prior to the date of the so-called invention and places the same on an inclined floor or foundation, so as to give the making wire a pitch of not less that five inches, and operates the machine in the usual way he will practice the Eibel invention?

A. He will not be using the Eibel process if the pitch is not working in the direction of bringing the stock up to the speed of the wire.

×-*Q*. 212. What do you mean by that exactly?

A. I mean that it would be very easy for him to have a pitch, even though it was wholly unnecessary to carry out the process, even though the head on the slice was sufficient to produce a speed equal to that of the wire.

×-*Q*. 213. Well, assume that a paper manufacturer did have an ordinary Fourdrinier machine such as was in common use prior to the Eibel invention and the same was located on an inclined floor with a five-inch pitch to the making wire, under what conditions of operation would he employ the Eibel invention and under what conditions would he not employ such invention?

A. I thought I just answered that. I do not know how I can answer it any differently.

X-*Q.* 214. Will you answer it again?

A. He would not be using the Eibel principle if he is not working with a pitch along the line of a co-ordinate speed of stock with the speed of wire.

X-*Q.* 215. You mean by that that with the arrangement of machine as specified in my last question the wire must be operated at such a speed as to cause its speed and the speed of the stock to be exactly equal at some point between the breast roll and the suction boxes, do you?

A. That speed equality must be obtained between those two points in order to form a sheet of paper.

X-*Q.* 216. And if it is obtained at any place between those two points the machine will then operate in accordance with the Eibel invention; that is correct, is it not?

A. Not necessarily, because the pitch of the wire might have caused overrunning of the stock on the wire, and the negative drag of the wire has brought about equality of speed.

X-*Q.* 217. I understood you to say that you could not have an overrunning of speed of stock?

A. Oh, no, not at all.

X-*Q.* 218. If the stock had a lower speed than the wire is running, there must be some point where the two speeds are equal before there is any overrunning.

A. They must first reach the point of equality.

X-*Q.* 219. Then I understand there can be no overrunning after that?

A. No; I never intended to give you that idea.

X-*Q.* 220. Under what conditions might there be an overrunning after speed equality has been reached?

A. If the pitch is so excessive that the point of equality is reached while the stock is still in a very fluid condition, it is quite possible for the speed to overrun.

X-*Q.* 221. You wouldn't expect to find that with a five-inch pitch which I have assumed in these questions?

A. Not with a high-speed machine. Well, that would be possible, too, if the head was so great on the slice that the stock came on to the wire at substantially the speed of the wire.

×-Q. 222. Then, let me put the question in this way: If a paper manufacturer having one of the Fourdrinier machines that was in common use prior to the Eibel invention placed the same on a side hill or an inclined floor, anywhere he obtained a five-inch pitch of the wire, and used a head which gave an initial velocity of the stock less than the speed of the wire and operated the machine so that the wire and the stock would have speed equality at any point between the breast roll and suction boxes he would then practice the Eibel invention; is that correct?

A. Yes; if the amount of increase in speed of the stock has been substantially made up by the pitch of the wire, I would say the Eibel principle has been employed.

×-Q. 223. And, as I understand you, referring to claim 1 of the Eibel patent, "a substantial elevation above the level" for the paper-making wire means an elevation of five inches or more?

By Mr. Lyman. The question is objected to as obviously calling upon the witness for a construction of the claim as a function of the court.

By Mr. Paul. The witness has defined the word "substantially" as used in this claim, and it seems to be proper cross-examination.

A. Yes.

×-Q. 224. And the speed of the stock is recited in the claim—what must that be to comply with the requirement that the stock shall "travel by gravity, rapidly"?

Mr. Lyman. Same objection.

A. Why, a rapid travel would necessarily be the result of a substantial or high head.

×-Q. 225. You mean a high head or a high pitch to the wire?

A. I meant to say a high pitch; a high or substantial pitch.

×-Q. 226. Then it might be any speed that would be produced by a pitch of five inches or more?

A. I should say so.

X-*Q.* 227. And that might be as low as 350 feet per minute, might it not, depending upon the initial velocity with which the stock entered upon the wire?

A. I don't think it is to be thought of in connection with the head at all.

X-*Q.* 228. Then it might be as low as 350 feet per minute, might it not?

A. If caused by the pitch alone?

Mr. PAUL. Yes.

A. If caused by the pitch alone it would be as low as 350 feet a minute.

X-*Q.* 229. Could it be lower than that?

A. If the wire that was pitched but five inches with no head at all on the machine it would be lower than 350 feet.

X-*Q.* 230. And it would still embody the Eibel principle?

A. If it had no head, yes. In other words, the Eibel invention can be employed without any head at all.

X-*Q.* 231. You have given in answer to direct question 7 a list of the licensees from the plaintiff under the patent in suit. Will you please look at this list and state how many of these licensees are stockholders in the plaintiff company?

A. Five of that list.

X-*Q.* 232. Will you name them?

A. Great Northern Paper Company, International Paper Company, St. Croix Paper Company, Berlin Mills Company and the Laurentide Paper Company.

X-*Q.* 233. Of the 3,400 tons of news paper manufactured today by the licensees under the Eibel patent, what amount is manufactured by the five companies named in your last answer?

A. I couldn't tell off-hand; I would have to do some figuring on it.

X-*Q.* 234. Can you tell approximately?

A. I cannot with absolute accuracy tell. I don't know, for instance, just how much the International Paper Company manufactured.

×-*Q.* 235. You must be able to produce it as accurately as you can tell the 3,400 — as you can produce the total?

A. Yes, sir.

×-*Q.* 236. How long would it take you to do that?

A. I think I could come pretty near to it in a few minutes.

×-*Q.* 237. Will you make that computation or estimate and add it to your deposition before the same is closed?

A. I will.

×-*Q.* 238. Did your company to your knowledge bring a suit against the West End Paper Company of Carthage, New York?

A. No.

×-*Q.* 239. Are you sure about that?

A. Yes, sir.

×-*Q.* 240. Didn't you bring a suit against some company located at Carthage, New York, in the United States District Court at Syracuse, New York?

A. We did.

×-*Q.* 241. What was the name of that company?

A. Champion Paper Company.

×-*Q.* 242. That is not listed among the licensees?

A. No.

×-*Q.* 243. Has that company a license?

A. No; it is under a perpetual injunction against using the Eibel process.

×-*Q.* 244. Is it using the Eibel process?

A. Not to my knowledge. I never heard so.

×-*Q.* 245. Settlement was made between your company and the Champion Paper Company, was it not?

By Mr. Lyman. What relation has that line of inquiry to the direct examination?

By Mr. Paul. The witness has testified that so many tons a day was being made under a license.

By Mr. Lyman. There is no shadow of ground in the direct examination for that question. The question is objected to as entirely outside the scope of the direct examination and the witness is instructed not to answer unless so directed by the court.

A. I refuse to answer by advice of counsel.

X-*Q.* 246. Have you any reason for refusing to answer except the instruction of counsel?

A. I don't know that I have.

[Recess taken while witness prepares figures in answer to X-Q. 233.]

X-*Q.* 247. Have you now the figures giving the production of the licensees named by you — if so, will you state them?

A. I would say that the production of the stockholder licensees of the Eibel Process Company amounts to about 2,200 tons per day and about 1,200 tons for the others.

[Cross-examination closed.]

Redirect Examination by Mr. Lyman.

Q. 248. In your answer to X-Qs. 11 and 12 you stated that the Eibel Process Company has no other business than the granting of licenses under the Eibel patent; is that literally true?

A. From the beginning they have had two or three other things in which they were interested, but none of them has ever brought a dollar of return. For instance, the company had the rights at one time to manufacture a suction-box cover, but their rights were suspended.

By the Witness. I find that I was in error in stating that the Eibel Process Company had not brought a suit against the West End Paper Company at Carthage, New York. Such a suit was brought in the summer of 1916, but no proceedings were had in the case beyond the filing of the bill and motion papers, for the reason that the West End Paper Company took a license under the patent and paid damages for past infringement.

[Deposition closed.

Signature waived.

Plaintiff rests.]

CERTIFICATE OF NOTARY.

COMMONWEALTH OF MASSACHUSETTS,

COUNTY OF SUFFOLK.

I, Hector M. Holmes, Notary Public in and for said county and State, hereby certify that the foregoing deposition of Elliot F. Aldrich was taken before me on behalf of complainant at the office of Fish, Richardson & Neave, 84 State Street, Boston, on September 18th and 19th, 1917; that both parties were represented by counsel; that said witness before giving his deposition was duly sworn by me; and that I am not related to or of counsel for either of the parties or in any way interested in the result of said suit.

In witness whereof, I have hereunto set my hand and affixed my notarial seal this fifteenth day of November, 1919.

HECTOR M. HOLMES,

[SEAL] *Notary Public.*

EVIDENCE FOR PLAINTIFF IN REBUTTAL.

MINNEAPOLIS, MINN., September 13, 1919.

Testimony taken pursuant to notice before F. H. Ford, Notary Public.

Present: A. C. PAUL, Esq., *Counsel for Defendant;*
HARRISON F. LYMAN, Esq., *Counsel for Plaintiff.*

DEPOSITION OF O. L. E. WEBER.

O. L. E. Weber, a witness called on behalf of plaintiff, being first duly sworn, deposes and says as follows: —

Direct Examination by Mr. LYMAN.

Q. 1. Please state your name, age, residence and occupation.

A. O. L. E. Weber; fifty-two; manager Watab Pulp & Paper Company; residence, St. Cloud, Minnesota.

Q. 2. The Watab Pulp & Paper Company is located at Sartell, Minnesota?

A. Yes, sir.

Q. 3. You appear here in response to subpoena, do you not?

A. Yes.

Q. 4. Are you acquainted with a so-called committee of paper manufacturers, organized to invalidate the alleged patent of Eibel Process Company?

Mr. PAUL. Will counsel please state the purpose of this testimony?

Mr. LYMAN. I understand that there is in existence such a committee as I have referred to; that its membership includes a considerable number of paper manufacturers; that its purpose is to participate in the defense of the present suit on the Eibel patent in suit by contributions of money and otherwise and that its members have contributed in these ways to the defense of this suit. I think that it is proper and only fair that the facts regarding this organization and its connection with this litigation be brought out on the record, in order that it may be apparent who the parties in the case defending it really are.

Mr. PAUL. In view of the statement of counsel, the question is objected to as irrelevant and immaterial and not rebuttal of any evidence produced by the defendant, and the witness is instructed and advised not to answer the question.

A. Under advice of counsel, I refuse to answer the question.

Mr. LYMAN. I protest against this refusal to answer and against the instruction of counsel, and give notice that the matter will be brought before the District Court of the United States in this district for decision as soon as counsel can be ready.

Q. 5. You are the treasurer of the committee referred to, are you not?

[Same instruction, answer and notice.]

Q. 6. The purpose of this committee I understand to be to aid in the defense of the present suit of Eibel Process Company against the Minnesota & Ontario Power Company; is that correct?

[Same instruction, answer and notice.]

Q. 7. Have the members of this association contributed money to be used in the defense of this case?

[Same instruction, answer and notice.]

Q. 8. Has this committee engaged and does it pay the counsel who are conducting the case for the defense?

[Same instruction, answer and notice.]

Q. 9. Please name all the members of this committee and all concerns which have contributed to it.

[Same instruction, answer and notice.]

Q. 10. Has this committee assumed the conduct of the defense in this case?

[Same instruction, answer and notice.]

Q. 11. I show you what purports to be a copy of a circular letter sent out by this committee to various paper manufacturers under date of November 14, 1917, and ask you whether such a circular as this was, in fact, sent out by this committee on or about the date?

[Same instruction, answer and notice.]

Q. 12. Please submit copies of any circular letters which this committee has sent out from time to time to paper manufacturers.

[Same instruction, answer and notice.]

Q. 13. When was this committee formed?

[Same instruction, answer and notice.]

Q. 14. Are you aware that one of the four machines of the Minnesota & Ontario Power Company, the defendant in this case, has, while this case has been pending, had the Fourdrinier wire dropped from a pitch of about 14 inches to a pitch of about six inches?

[Same instruction, answer and notice.]

Q. 15. Has this committee any understanding with the Minnesota & Ontario Power Company as to reimbursing the Minnesota & Ontario Power Company for expenses or losses incurred in the experimentation with and operation of said machine with the lowered wire?

[Same instruction, answer and notice.]

Q. 16. Who called together the meeting at which said committee was organized?

[Same instruction, answer and notice.]

Q. 17. To whom were the circulars like the one previously shown you sent?

[Same instruction, answer and notice.]

Mr. LYMAN. It is noted that the circular shown the witness is one which was previously marked for identification in the case, "Exhibit X".

[Deposition suspended to await the ruling of the Court.]

I certify that the foregoing is a true copy of proceedings had before me September 13, 1919.

F. H. FORD,
Notary Public.

Mr. LYMAN. It is stipulated that, following the taking of the proceedings above noted, counsel for plaintiff and counsel for defendant appeared before his Honor Judge Booth, of the District Court of the United States for the District of Minnesota, Fourth Division, sitting at Minneapolis, on the thirteenth day of

September, 1919; and that thereupon a petition was presented by plaintiff to compel answers to the foregoing questions, which petition was in form as follows:

> "Now comes Eibel Process Company, plaintiff in a suit pending in the United States District Court for the District of Maine, against Minnesota & Ontario Power Company, both being corporations organized under the laws of Maine, and represents that said suit which is numbered 769 is a suit alleging infringement of patent to Eibel 845,224, issued February 26, 1907, for improvement relating to Fourdrinier machines. A copy of the Bill of Complaint and Answer in said case is annexed hereto as Exhibit A.
>
> "Petitioner further represents that on Saturday, September 13, 1919, a subpoena having been duly served upon O. L. E. Weber, of St. Cloud, Minnesota, to testify as a witness for plaintiff in said cause, said Weber appeared and was asked by counsel for the plaintiff certain questions which said witness declined to answer under advice of counsel, as appeared from the copy of said deposition duly certified by F. H. Ford, the notary public before whom said deposition was taken, hereto annexed and marked 'Exhibit B'.
>
> "Petitioner further represents that each and all of said questions are proper and material, and petitions that said Court make its order directing the witness to answer said questions and any other questions relating to kindred subject matter which may be proper and material."

That upon argument Judge Booth withheld action upon said petition until the question had been passed upon by the District Court for the District of Maine, Judge Booth's opinion in the matter having been rendered in the following words: —

The COURT. I have no doubt that if, in putting in the case in chief or taking depositions in chief, the plaintiff had gone into this inquiry, that it would be perfectly justified in doing so. It has a right to ascertain who the real defendant is. While a simple contribution in money may not be sufficient to estop some

third party, contribution in money and the exercise of controlling management may be sufficient to estop him; and I take it this inquiry would probably be along those lines. So that if this application to compel the witness to testify in the case in chief were in court, I would have no hesitancy in saying that the witness ought to be compelled to testify. But I am somewhat in doubt on the other point raised by Mr. Paul, the taking of depositions on the part of the plaintiff in chief after its case is brought to a close and defendant has brought its case to a close, and plaintiff is now taking depositions in rebuttal. Certainly if the plaintiff undertook to reopen its case and put in testimony that should have gone in in chief, objection might be raised. If plaintiff wants to do that, by reason of the line of facts brought out subsequently to the taking of the depositions in chief, I am inclined to think it would require an application to the court for leave to reopen the case in chief and take the additional testimony. Now, that being the case, the question would arise, where the application should be made. This court of course has no control over a case pending in Maine. It simply has power to compel witnesses to testify when there is no ground such as this shown why they should not testify. If, for instance, the deposition was being taken in chief, and this inquiry was put to the witness and he refused to testify, and an application were made to this court, I am inclined to think I should grant the application.

I suppose I might do this, I might hold this motion open, with the understanding that when necessary an application will be made in Maine to reopen the case, and if the court of Maine does reopen the case, I will grant the motion.

I will hold the motion open and not make any order at the present time, until the application has been made to the home court in Maine, and the result made known to me.

Mr. LYMAN. Deposition is suspended until a motion can be made before the District Court of the United States for the District of Maine.

Adjourned to meet at International Falls, Minnesota, Monday, September 15, 1919.

INTERNATIONAL FALLS, MINN., September 15, 1919.

Met pursuant to adjournment at Rex Hotel, International Falls, Minnesota, three o'clock P. M.

Present — counsel as before.

DEPOSITION OF RICHARD F. CREAMER.

Richard F. Creamer, a witness called on behalf of plaintiff, being first duly sworn, deposes and says as follows: —

Direct Examination by Mr. LYMAN.

Q. 1. How old are you, Mr. Creamer?

A. Thirty-two.

Q. 2. You live at International Falls?

A. Yes.

Q. 3. You are employed by the Minnesota & Ontario Power Company?

A. Yes.

Q. 4. What is your job?

A. Running a machine.

Q. 5. What machine?

A. No. 2 machine.

Q. 6. How long have you worked for the Minnesota & Ontario Power Company?

A. From a year ago last January.

Q. 7. That would be January, 1918?

A. A year ago last July.

Q. 8. That would be July, 1918?

A. Yes.

Q. 9. You have only worked for them a year?

A. A year and a month or two; yes.

Q. 10. Whom did you work for before?

A. The Great Northern, at Madison, Maine.

Q. 11. When was it you left the Great Northern?

A. In July.

Q. 12. 1918?

A. Yes, 1918.

Q. 13. Who worked on the No. 2 machine before you did, do you know?

A. Why, no, I don't just know.

Q. 14. Have you worked on the No. 1 machine at all?

A. No, not any more than merely extra, you see.

Q. 15. Do you know what the amount of pitch on the wire of No. 2 machine is now?

A. No, I don't just know it in inches.

Q. 16. Has it been the same all the time you have been with the company?

A. Yes.

Q. 17. Do you know what the pitch is on the No. 1 machine?

A. I couldn't say that in inches, either.

Q. 18. Do you know what the speed of the No. 1 machine is now?

A. Why, it is over 600; that is all I know.

Q. 19. Paper speed?

A. Yes; over 600 feet.

Q. 20. Do you know whether the speed on the No. 2 machine is the same as that on the No. 1 machine?

A. About.

Q. 21. Have you more breakages in the No. 2 or the No. 1 machines?

A. Well, that is a very peculiar question, because circumstances doesn't always cover all those things, you see. The production would show that.

Q. 22. What is your impression?

A. Well, as I say, circumstances alter cases on paper machines. Since I have been here No. 2 machine has been doing very well; that is, in production.

Q. 23. What about the quality of the paper that is made on it?

A. You see, I haven't much to do to look after the quality, any more than breaks and likewise, to know the quality tests. All I have to do is to keep the paper over.

Q. 24. Do you ever measure the depth of the pond behind the slices in that machine?

A. No; you see most practical paper-makers are not sliding rule

men; they don't measure things like that; they get what they want on the machine, and that is enough.

[No cross-examination.
By agreement of counsel, signature waived.]

DEPOSITION OF LEON LAVALLEY.

Leon LaValley, a witness called on behalf of plaintiff, being first duly sworn, deposes and says as follows: —

Direct Examination by Mr. LYMAN.

Q. 1. What is your age, Mr. LaValley?

A. Thirty-two.

Q. 2. Where do you live?

A. International Falls, right now.

Q. 3. You work for the Minnesota & Ontario Power Company?

A. Yes.

Q. 4. What is your job there?

A. Machine tender.

Q. 5. On what machine do you work?

A. No. 6.

Q. 6. That is at Fort Frances?

A. Fort Frances; yes.

Q. 7. Have you ever worked at International Falls mill?

A. Yes.

Q. 8. When did you work there?

A. I left there a year ago the 8th of May.

Q. 9. That would be May 8th, 1918?

A. Yes.

Q. 10. When did you start in there?

A. Seven years ago since a year ago; I started the 11th of May seven years ago; that will be eight years ago last May.

Q. 11. That would be May 11th, 1911; that was pretty soon after the mill was started?

A. Yes.

Q. 12. What machine did you work on during the time you were there?

A. I was back tender first on No. 1, and then went as back tender on No. 3.

Q. 13. Did you ever work on the No. 2 machine?

A. I run No. 2 machine; I back tended three years out of the seven; went on No. 2, running that machine.

Q. 14. Were you running No. 2 in 1917?

A. I couldn't tell you; I back tended three years. What year was that you named?

Q. 15. 1917; that would be two years ago?

A. Let's see; I made a kind of change there — I think it was 1917 — from No. 2 to No. 3, running; I don't know exactly when it was; I can remember the time that Devine and Killaway were let out; that is the time I made the change.

Q. 16. Up to that time you were on No. 2?

A. Yes, up to that time I was on No. 2; they were both let out at the same time; they had a little trouble; that is the time I made the change.

Q. 17. Up to that time you had been machine tender on No. 2?

A. From the time I was set up until Divine and Killaway were through I was on No. 2.

Q. 18. At the time you left No. 2 to take No. 3 what pitch did the wire have?

A. I know it was lowered when I went over there, but I couldn't exactly tell you what the pitch was; that I couldn't tell you what pitch it was; between 4 and 6.

Q. 19. Inches?

A. Yes.

Q. 20. Now, it was subsequently raised again, wasn't it?

A. After I left?

Q. 21. Yes.

A. Yes.

Q. 22. While you were working on No. 3?

A. While I was working on No. 3.

Q. 23. Raised up to 14 inches again?

A. Yes, sir.

Q. 24. What had it been before?

A. I told you I didn't know; it was between four and six.

Q. 25. Then it was raised to 14?

A. Yes, the pitch it was before.

Q. 26. Why was it raised to 14?

A. That I wouldn't know either; I suppose that it was what they wanted it to be.

Q. 27. How long was it run at 14 inches after that?

A. After that?

Q. 28. Yes.

A. I don't remember.

Q. 29. It is now down to about —

A. [Interrupting.] I didn't take much interest in it, because I wasn't on it then; I think it was lowered until I got out of the mill; I am pretty sure it was.

Q. 30. It was subsequently lowered for a second time?

A. Yes.

Q. 31. To what it is now?

A. Yes.

Q. 32. Do you know when it was that it was lowered the second time to what it is now?

A. That was between the time I was on No. 3 and the time I went out of there.

Q. 33. Now, the summer of 1917 was it that Devine left, two years ago this summer?

A. That I couldn't tell you; I didn't pay much attention to it.

Q. 34. Do you remember the time when the pitch of No. 2 was first dropped from 14 inches to about six?

A. Yes.

Q. 35. Do you know why it was dropped about that time?

A. I don't know exactly why it was, but I had knowledge why it was.

Q. 36. Why was it?

A. They were fighting a case.

Q. 37. Then it was subsequently raised up, after they had taken testimony, to 14 inches?

A. Yes.

Q. 38. Do you know why it was raised then?

A. No.

Q. 39. You don't know why it was subsequently dropped down to where it is?

A. Not to tell the truth about it.

Q. 40. Have you knowledge about that?

A. Oh, different talk.

Q. 41. What was the talk?

A. What they generally would do; they said that Eibel was fighting this case through; that they had to lower the pitch down at once; they lowered it down; then I supposed that they had won the case — was the reason for raising it up again.

Mr. PAUL. Objected to as a matter of hearsay.

Q. 42. That was the common talk around there?

A. Yes.

Mr. PAUL. Same objection.

Q. 43. Do you know anything about the head that was carried on that No. 2 machine? By that, I mean the depth of the pond behind the slice.

A. No; I never measured it. I don't believe there is a machine tender around the mill ever measured the depth of the head. They just get a pretty fair sheet on the wire and let it go at that; keep it where it runs the best.

Q. 44. Have there ever been any changes in the speed of those machines while you have been familiar with them?

A. I guess they slowed them down and speeded them up. They do with all of them. They generally run around the same, the whole four.

Q. 45. What is the regular speed?

A. When I was there, between 6 and 625, all the time.

Q. 46. That would be paper speed?

A. Paper speed; yes. But I guess they speeded it up since I left there.

Q. 47. Do you know whether the head on No. 2 is greater than on the other machines? The depth of the pond behind the slice, is that greater than on the others?

A. Well, I don't know; that all depends on how a fellow feels. He can raise his head to suit himself. He can't raise it any higher than above the slice. You can run your head to suit yourself. If you want to run it low, you can.

Q. 48. What is your opinion of the quality of paper on No. 2 machine with the low pitch, as compared with the quality made on the same machine with the 14-inch pitch?

A. That is a question I wouldn't answer at all.

Q. 49. Perhaps you could say as to whether there was more trouble from breakages or not.

A. No; I wouldn't say yes or no on that question. There are too many different things can make a machine break without that.

Q. 50. Who took your place on No. 2 machine when you went to No. 3?

A. Bill LaValley.

Q. 51. Is he here now?

A. Yes.

Q. 52. He is your brother?

A. Yes.

Q. 53. Is he on that machine now?

A. No; he is on No. 4 now.

Q. 54. How long did he work on No. 2?

A. He took my place when I left here; that's a year ago last May.

Q. 55. Does he work down there now?

A. He worked from the time Divine got through until a year ago last May.

Q. 56. Can you say how much below the top of slice bar the top of the pond is usually carried on that No. 2 machine?

A. Well, the way I used to average it, we used to have some little nuts an inch and a half from the top of the slice; that is where I generally carried it. Another guy might come along, and he probably would carry it higher.

Q. 57. When you were on the No. 3 machine, how far from the top of the slice did you carry the pond?

A. I think I carried it a little bit higher there.

Q. 58. The nuts are about the same distance?

A. Just about.

Q. 59. Was that slice bar the same size — thickness on No. 2 as on No. 3?

A. That I couldn't say.

Q. 60. You wouldn't know whether you carried a deeper pond on the No. 3 or the No. 2?

A. No.

Cross Examination by Mr. Paul.

×-*Q.* 61. Mr. LaValley, do you know just what day it was that you changed from No. 2 to No. 3?

A. No, I don't know.

×-*Q.* 62. In 1917?

A. I don't know exactly what day it was.

×-*Q.* 63. Did you change before Divine left the mill?

A. Just at the time.

×-*Q.* 64. The same day?

A. Well, that was the — there was one week's trouble, and I think I started on a Monday, at four o'clock.

×-*Q.* 65. Did you go out at the time Divine did?

A. Yes.

×-*Q.* 66. How long were you out?

A. I think I went out on Tuesday; about four days.

×-*Q.* 67. It was a sort of a strike; you went out on a strike at that time?

A. Well, it wasn't exactly a strike.

×-*Q.* 68. You left the mill?

A. I left the mill.

×-*Q.* 69. Didn't work for a week?

A. I didn't work for a few days.

×-*Q.* 70. That was at the time Divine left?

A. Yes.

×-*Q.* 71. Was this time you changed from No. 2 to No. 3 when you went back?

A. Well, I worked on No. 4 a short time, but my regular job was on No. 3.

×-*Q.* 72. But you didn't work on No. 2 after you were absent four or five days?

A. I didn't work on No. 2 after I left No. 2.

×-*Q.* 73. When you left it was when you stopped work at the time Divine left the mill?

A. Yes.

×-*Q.* 74. You never worked on No. 2 since?

A. I never worked on No. 2 since.

×-*Q.* 75. You left the mill in May, 1918; you left the company?

A. A year ago last May?

×-*Q.* 76. Yes.

A. Yes.

×-*Q.* 77. Where did you go then?

A. Rhinelander, Wisconsin.

×-*Q.* 78. Whom did you work for there?

A. On a farm three months.

×-*Q.* 79. How did you happen to go to Rhinelander?

A. That is where my woman's folks live.

×-*Q.* 80. Your wife's people live there?

A. Yes.

×-*Q.* 81. Did Mr. Eibel communicate with you before you went down there?

A. Not before.

×-*Q.* 82. Did you see him while you were down there?

A. I didn't see him to speak to while I was there. I worked for him three months after I left the farm.

×-*Q.* 83. You worked on the farm three months?

A. Yes.

×-*Q.* 84. Then you went to the Rhinelander mill?

A. Yes; three months.

×-*Q.* 85. And worked for Eibel three months?

A. Yes.

×-*Q.* 86. Then you came back here?

A. I went to Brainerd.

×-*Q.* 87. How long were you at Brainerd?

A. About six months.

X-*Q.* 88. Then you came here?

A. Then I came here.

X-*Q.* 89. When did you come here?

A. I think it was the 11th of May I started to work here; either the 8th or the 11th.

X-*Q.* 90. This yerr?

A. Yes.

X-*Q.* 91. Did you have any talk with Eibel about this No. 2 machine while you were working for him?

A. No.

X-*Q.* 92. Or before?

A. Not before either.

X-*Q.* 93. At any time after you left the mill here?

A. I did; just before I came up here, when I was at Brainerd.

X-*Q.* 94. When you were at Brainerd?

A. Yes.

X-*Q.* 95. Did you go back to Rhinelander?

A. Not to work; I was called back.

X-*Q.* 96. By whom?

A. Eibel.

X-*Q.* 97. You went back there to talk with him?

A. Yes.

X-*Q.* 98. And then how did you happen to leave Brainerd?

A. I got a job here.

X-*Q.* 99. Did you get a job here before you talked with Eibel or after?

A. Just about two days before I got the job — I got the job here two days before I got the letter from Eibel.

X-*Q.* 100. You haven't that letter?

A. From Eibel?

X-*Q.* 101. Yes.

A. I don't think so; I think I threw it away. I carried it around a couple of days, however.

X-*Q.* 102. Then you came back here and went into the Fort Francis mill?

A. Yes.

Redirect Examination by Mr. LYMAN.

Q. 103. You appear under subpoena?

A. What?

Q. 104. You had a subpoena served on you to appear here today?

A. Yes.

DEPOSITION OF FREDERICK BELLILE.

Frederick Bellile, a witness called on behalf of the plaintiff, being first duly sworn, deposes and says as follows: —

Direct Examination by Mr. LYMAN.

Q. 1. How old are you?

A. Thirty-seven.

Q. 2. You work for the Minnesota & Ontario Power Company?

A. Yes, sir.

Q. 3. What is your job?

A. At the present time, now, it is construction superintendent.

Q. 4. How long have you been construction superintendent?

A. Two weeks.

Q. 5. Before that what was your work?

A. Master mechanic.

Q. 6. How long were you master mechanic?

A. Six years.

Q. 7. Continuously?

A. Yes, sir.

Q. 8. Do you remember when the No. 2 machine was dropped from a pitch of about 14 inches to a pitch of six inches, the first time?

A. I think it was 1917; about April, 1917.

Q. 9. About April, 1917?

A. Yes, sir, somewhere in that neighborhood.

Q. 10. Did you help about that work?

A. I set it down myself.

Q. 11. It ran for some time at six inches and then it was raised again to 14 inches, wasn't it?

A. It was raised to its height.

Q. 12. To its original height?

A. To its original height; I wouldn't say how much that was.

Q. 13. It was the same as the other machines?

A. Yes.

Q. 14. When was that change made; when was it raised up?

A. When was it raised up?

Q. 15. Yes.

A. Early in the fall it was raised up, the same year.

Q. 16. Of 1917?

A. Yes.

Q. 17. Did you do the work of raising it up?

A. Yes, sir.

Q. 18. Why was it raised up?

A. I don't know.

Q. 19. Who gave you instructions to raise it up?

A. The superintendent.

Q. 20. Who was the superintendent at that time?

A. There was such a mixed up mess there, I couldn't tell you whether it was the superintendent or whether it was Seymour Backus' orders; whether it came from the vice-president. I don't remember.

Q. 21. Was it after Divine left?

A. I couldn't say whether it was after Divine left or before Divine left.

Q. 22. Do you know when it was Divine left?

A. Divine — he left along in the spring of the year some time.

Q. 23. Of 1917?

A. Of 1917; I am not positive.

Q. 24. Now, after this raise up again to 14 inches, or thereabouts, that pitch was subsequently, at some time, dropped again to what it is now, wasn't it?

A. Dropped again to what it is now?

Q. 25. To about six inches, wasn't it?

A. It was dropped again.

Q. 26. When was it dropped again for the second time?

A. By jinks, I don't know; I didn't keep tab on it at all; I couldn't say.

Q. 27. Well, was it as much as a year after it had been raised?

A. I couldn't say whether it was a year or how long it was.

Q. 28. Did you do the work of dropping it the second time?

A. Yes.

Q. 29. Drop it to the same position it had before when it was at its low point?

A. Yes; I think we dropped it a half or three-quarters of an inch lower than it was this last drop.

Q. 30. Is there any adjustment on that machine so you can put the breast roll higher or lower by turning a screw?

A. Yes, sir.

Q. 31. There is?

A. For leveling purposes only.

Q. 32. For leveling purposes — for leveling the wire?

A. Yes; and getting the wire running straight; that is all I know of.

Q. 33. Why was it that machine was dropped the second time to this low pitch — comparatively low pitch?

A. I don't know.

Q. 34. Who gave you orders to do it at that time?

A. Let me think. [Pause.] I think it was Jack Wiener.

Q. 35. Who was he?

A. He was kind of a head engineer around here; he looked after the operating for the company entirely.

Q. 36. Was it Wiener that gave you instructions to raise the wire from six inches to a 14-inch pitch? You said a little while ago there was a mixup at that time?

A. No; it wasn't Wiener. I don't think he was here at that time; I don't think it was Wiener; no.

Q. 37. Do you know where Wiener is now?

A. At Wausau, Wisconsin, somewhere.

Q. 38. Do you know anything about the quality of paper made on those machines, Mr. Bellile; does that come within your province?

A. No; I never bother my head about that at all.

Q. 39. Do you know whether they use the same stock on No. 2 as on the other machines?

A. No; I couldn't say that.

Cross Examination by Mr. PAUL.

X-*Q.* 40. You don't profess to say, Mr. Bellile, just when that No. 2 machine was first raised, do you?

A. First raised?

X-*Q.* 41. Yes.

A. No, I don't.

X-*Q.* 42. You haven't anything to fix those dates when you lowered it the first time or raised it or lowered it the second time?

A. No, sir.

X-*Q.* 43. You think that was all in the year 1917?

A. I think it was; I wouldn't swear to it.

X-*Q.* 44. You haven't any way of fixing the month, even?

A. No, I haven't. I might have a way if I looked my back records all up; but that is about the only way, if I could find them.

X-*Q.* 45. You haven't any definite recollection as to how long a time it was between when it was first lowered and when it was raised and between the time when it was raised and lowered the second time?

A. No, sir, I haven't.

Redirect Examination by Mr. LYMAN.

Q. 46. You come here today in response to a subpoena, don't you?

A. Yes, sir.

[By agreement of counsel signature waived.]

DEPOSITION OF ROBERT W. HADDOCK.

Robert W. Haddock, a witness called on behalf of plaintiff, being first duly sworn, deposes and says as follows: —

Direct Examination by Mr. LYMAN.

Q. 1. How old are you?

A. Forty-three.

Q. 2. You work for the Minnesota & Ontario Power Company?

A. Yes.

Q. 3. You are boss machine tender there?

A. No; I am day foreman.

Q. 4. You have charge of the four machines that are there?

A. The four machines, the beater room and the paper department generally.

Q. 5. How long have you worked for the Minnesota & Ontario Company?

A. Nine years.

Q. 6. You started in when the machines were first put up, then?

A. Yes.

Q. 7. When did you become day foreman?

A. In 1917.

Q. 8. Before that what were you?

A. Boss machine tender.

Q. 9. When did you become boss machine tender?

A. Somewhere around 1914.

Q. 10. As boss machine tender you had supervision over the four machines?

A. Yes.

Q. 11. Whose place did you take when you became day foreman?

A. Well, it was Jack Killaway.

Q. 12. What part of the year 1917 was it when you became day foreman?

A. The twenty-seventh day of June.

Q. 13. Do you remember the time when the No. 2 machine had its wire dropped from a pitch of about 14 inches to a pitch of six inches?

A. Yes.

Q. 14. That was about April, 1917?

A. Yes, March or April; I wouldn't be sure which.

Q. 15. What was the reason it was dropped at that time?

A. Well, I don't know; I never asked.

Q. 16. What?

A. I never asked the reason.

Q. 17. But it was generally understood it was because of the pendency of a suit on the Eibel patent?

A. Well, that was generally understood; but —

Q. 18. Now, a few months later it was raised again to its original height of 14 inches, wasn't it?

A. Yes.

Q. 19. When was that done?

A. Well, I haven't the dates; it was done not very long after I had charge of the thing.

Q. 20. That would be soon after June, 1917?

A. Some time in July; the latter part of July, I should say.

Q. 21. Why was it raised up at that time?

A. Well, it was raised up because the rest were raised up, to have them all the same.

Q. 22. Did that have anything to do with the Eibel case? Was it because it was understood at the mill the case had been won?

A. No; I think not; I don't know.

Q. 23. There was general talk there that that had something to do with it?

A. Not to my knowledge.

Q. 24. Was it raised up again to its original height because you thought you could make better paper at the higher level than at the lower level?

A. That is what I thought.

Q. 25. Was it done on your orders?

A. I wanted it up and they put it up.

Q. 26. At that time had you been informed that the injunction had been suspended in the case?

A. No.

Q. 27. You didn't know what the status of the case was at that time?

A. No.

Q. 28. Now, at the present time, it is down again to a pitch of something like six inches, or thereabouts?

A. Five and one-half.

Q. 29. Or thereabouts?

A. Yes.

Q. 30. When was it dropped for the second time?

A. Well, now, I couldn't say; it wasn't up so very long. But if the fellow that was in here, Bellile, acting as master mechanic, if he remembers those dates he would be the one that could tell.

Q. 31. He didn't remember what that date was.

A. If there is any work done on a machine, like clothing, I have a record of it, but the repair crew works under Bellile, and I don't keep track of that work.

Q. 32. At whose order was it dropped again, at yours?

A. No; they ordered it dropped. I don't just remember who it was.

Q. 33. From the head office?

A. Yes.

Q. 34. Without consulting you about it?

A. They said they were going to put it down again.

Q. 35. Do you know why they put it down?

A. No.

Q. 36. Did they say that had anything to do with this Eibel case?

A. Well, of course, I can't say that they said anything like that; but of course I thought perhaps it did.

Mr. PAUL. That part of the answer is objected to as immaterial; not evidence.

Q. 37. Do you know whether the slice bar on the No. 1 machine is the same width as the slice bar on the No. 3 machine?

A. Well, I will tell you there isn't very much difference, although I think No. 1 is a little narrower. It isn't quite as deep as the rest of them. In fact we made kraft on that machine. When Meyers was here, acting general superintendent, we tried out a great many experiments — ran a pond a foot deep and over 14 inches. We put an extension on that slice; when we done that we had to cut into the slice and had to take it off and plane off considerable. But the rest of the slices should be about the same, but No. 1, I should say, was some narrower than the rest.

Q. 38. Do you ever measure the depth of the pond on those machines behind the slice?

A. Do I?

Q. 39. Yes.

A. Yes, sometimes.

Q. 40. Do you remember measuring it this morning?

A. Yes.

Q. 41. Was it about the same that you usually have carried it this morning on No. 1 machine?

A. Just about the same; they vary. There is three machine tenders; not one wants that pond exactly the same; but as long as they get the paper I don't care where they carry it. One wants it higher, one lower. If they change it and make paper, I don't care.

Q. 42. This morning was about a typical place?

A. Yes; I have seen them vary an inch or two. If the cycles are down, the pumps don't throw even, and you will get a little variation.

Q. 43. It was a little over eight inches this morning, was it not, on the No. 1 machine?

A. I just don't remember now.

Q. 44. Do you remember what it was on the No. 2, or didn't you measure that this morning?

A. I measured that.

Q. 45. What was it?

A. I don't remember. I measured the slice and subtracted the difference — I don't remember just what it was — I measured the slice from the top roll and from the top to the bottom, and subtracted to find out the opening. You want to find out the opening beneath the slice?

Q. 46. Has it been the practice to carry a deeper pond on the No. 2 than on the others, would you say?

A. Yes; as a rule we have carried a little deeper there.

Q. 47. How much; a couple of inches deeper?

A. No; we have a higher head on No. 1 machine than any other machine, but as a rule we have it a little higher on No. 2. The machine tenders seem to think it runs better to have the same head carried on the others.

Q. 48. What do you think as to the quality of paper that is made

on the No. 2 machine as compared with the quality on the No. 1— as No. 2 machine is now?

A. I will tell you: the sheet is a little more open on No. 2, but the Pop test is better; the Mullan test there is better.

Q. 49. What do you mean by saying the paper is more open?

A. It isn't closed up so much.

Q. 50. You mean it has a wild look-through?

A. Yes.

Q. 51. What about drying; is the drying more regular on the No. 1 than it is on the No. 2?

A. No, it is more regular on the No. 2.

Q. 52. What about drainage?

A. You mean the retention of water?

Q. 53. Yes.

A. The water leaves it a little sooner on No. 2.

Q. 54. Was the slice opening this morning about what it has been customary to carry it?

A. Just about, I should think. I will tell you: it didn't come out just right the way I measured it, because I measured from the front of the slice down to the water. There is a slope there, and it is pretty hard to get that accurate. There ought to be more than an inch opening; it measures a little over an inch. I measure those Sundays sometimes when they shut down. We intend to have it about an inch and a half.

Q. 55. It was running this morning at 78 turns a minute to the lower couch roll. Is that about the normal speed?

A. I have that somewhere; I should say that is nearly right. However, all the machines slowed down last week. I don't think No. 2 is quite up to speed. No. 4 isn't, I know. I don't know whether I have that here or not. It seems to me I had 79 here.

Q. 56. Do you know how the weights of paper on those machines run?

A. The weights?

Q. 57. Yes.

A. I haven't checked them up for the last two weeks.

Q. 58. But what has it been usually?

A. There is a monthly statement made out that I get.

Q. 59. I don't mean the total production. I mean the weight per ream.

A. I know; that is what I mean. That is the way it is figured out each month and how it averages per day and per month.

Q. 60. How does it average?

A. No. 2 compared with the other machines?

Q. 61. Yes.

A. I never noticed it that way. If the whole thing doesn't average over half a pound over weight, I don't say anything. If it is above that, I call their attention to it.

Q. 62. What is the weight you are trying to get?

A. Sixty-four — double sheet.

Q. 63. Do you use the same stock on No. 2 as on the other machines?

A. Exactly.

Q. 64. Have you more trouble with breakages on No. 2?

A. No; I am awfully surprised on that; we do not. We haven't had as much trouble as on No. 1. It was a surprise to me, but it is a fact. The production will show that, I think.

Q. 65. Who has been in charge of the No. 2 since you became day foreman?

A. Who has been in charge of it?

Q. 66. Yes; who has been the machine tender on that machine?

A. We have three.

Q. 67. Three shifts; who are the three?

A. We have had different men.

Q. 68. Who is in charge now?

A. A fellow by the name of Gendron.

Q. 69. Can you give the other names, Mr. Haddock? *A.* Creamer and Malody.

Q. 70. Do you use any more water in the stock for No. 2 machine than the others, or less, or is there any difference?

A. We use all the water we can get from the pumps on all the machines. We are handicapped.

Q. 71. Do you use more or less on No. 2 than the others?

A. We can use more on No. 2.

Q. 72. As a matter of fact, do you use more on the other machines?

A. We do if we can get it.

Q. 73. Why?

A. We use all the water we can get, and those pumps probably throw more. We use more water on No. 4 than any other, because Mr. Ross put on a larger pump and speeded it up. We get more water on No. 4 than any other machine. But of the three machines 2 and 3 get more than No. 1 does.

Cross Examination by Mr. PAUL.

×-*Q.* 74. You haven't any way of fixing the day when that No. 2 machine was lowered the second time here?

A. Well, I don't know; I don't believe there is any record of that. Bellile ought to have a record of it, because that is an all day's job.

×-*Q.* 75. Would you think the 4th of August might be the correct date that it was lowered?

A. That it was lowered?

×-*Q.* 76. Yes, the second time.

A. No, I don't think it was; I think it was lowered later on than that.

×-*Q.* 77. But you are not sure of that?

A. I think it was later than that; I wouldn't be absolutely sure.

×-*Q.* 78. If that is the date that there is a record at the office, you wouldn't have anything to contradict it?

A. No.

×-*Q.* 79. I have been given the first Sunday in August, 1917, when it was lowered the second time.

A. Well, it may have been; that is quite a while ago, and I have been out a good deal since. If it was anything in the line of clothing or rolls, I keep a record of that, but this work Bellile does; he is supposed to keep a record of that.

Redirect Examination by Mr. LYMAN.

Q. 80. You come in response to a subpoena?

A. Yes.

Q. 81. Which do you regard as more important, the Pop test or looking through the paper, Mr. Haddock?

A. Well, it is the Pop test and the tear we generally look to; if the formation is good enough so the paper sells all right, the Pop test and the tear is the thing that counts.

Q. 82. What is the difference between the Pop test and the tear?

A. Well, there is some difference.

Q. 83. What do the two things show?

A. The Pop test — for instance, it might test very good; the Pop test might be pretty good, and it might tear good one way and not the other; that is so with the very high pitch machine, because the fibers are laying one way; with the lower pitch it is webbed in better, although it is a freer wilder looking sheet; that is something I don't know until I try it out.

Recross Examination by Mr. PAUL.

X-*Q.* 84. Will you just explain how that Pop test is made; what do you mean by that; is it done by an instrument?

A. Yes; the Mullan people put out a little tester; there is a little rubber diaphragm filled with glycerine underneath, and with a little press; it presses the sheet down on that with a little lever; you screw that up and the rubber comes up — it has a little oval piece of rubber, and gives a steady strain on that, pressing up there; it registers how much it is, how many pounds, and finally breaks the paper, the breaking strain.

X-*Q.* 85. It finally breaks the paper?

A. Yes.

X-*Q.* 86. You didn't know, when you directed that No. 2 machine to be raised, as I understand you, that the paper would be stronger at the lower pitch?

A. No, I didn't know it, because naturally if you have four machines running a certain pitch, all running alike, you think it is better that way.

X-*Q.* 87. You wanted them all alike; that is why you had them raised?

A. Yes; if you get four machines alike, using stock out of one

chest, you can regulate your stock; if you have one machine different, you can't do that.

×-*Q.* 88. So you have run this No. 2 machine ever since it has been lowered from the same stock, have you?

A. Yes.

×-*Q.* 89. The stock all comes out of the same chest?

A. Yes; but one thing I have noticed; the boss machine tenders have noticed it and called my attention to it; if the stock gets what we call soft and spongy — it isn't what we call ash free stock — if it is short free stuff, it seems to run better on No. 2 than on the other machines; the production shows it; if they have a hard night, No. 2 comes out with the best runs.

×-*Q.* 90. No. 2 makes a little more paper than No. 1?

A. Yes; and we put in new tube rolls on No. 1; they are all perfect — and the breast rolls.

×-*Q.* 91. And you still find that that change does not — with that change of No. 1, that No. 2 still makes more paper?

A. The last time I looked at the production it was higher on No. 2 than No. 1; there are days it doesn't make as much, but on the average I think it is a little higher on No. 2.

Re-redirect Examination by Mr. Lyman.

Q. 92. You said if you had all your machines running at the same pitch you could regulate the stock for them all alike?

A. Yes.

Q. 93. And that you couldn't if one was a different pitch. What do you mean by that?

A. I mean if you get the stock right for three machines it might not be just right for the other machine if the pitch was different.

Q. 94. Well, would you want it different for the No. 2 machine from what you have it for the 1, 3 and 4?

A. We make little changes in setting our Jordans up; sometimes we can make a change that would suit one machine better than another, you see; if they were all just the same, then they would all run nearer alike.

Q. 95. Have you always used the same stock on No. 2 as on the others?

A. Yes, sir, we have have always used the same stock on No. 2 as on the others.

Q. 96. Ground the same way?

A. Yes.

Q. 97. The same amount of sulphite in it?

A. Yes, the same in all of them; it has got to be.

Q. 98. And the same amount of water?

A. Well — the water, No. 4 gets more water than any of them. I wanted some changes on some of those, but No. 4 is the only one you can get a lot of water; but I think No. 2 and No. 3 get more than No. 1.

Q. 99. I wish you would give me, if you can, an illustration of what you mean by saying that it would be advantageous to have all the machines running the same pitch, because you can regulate the stock to suit them all, because you might want to regulate it differently for one with a lower pitch or a higher pitch. I don't quite see what you mean by that. I wish you would explain it a little more fully.

A. Simply this: if you don't have the machines all alike, it is hard to get the — they won't all run alike.

[By agreement of counsel signature waived.
Depositions at International Falls closed.]

NOTARY'S CERTIFICATE.

STATE OF MINNESOTA,
COUNTY OF RAMSEY, ss.

I, F. H. Ford, Notary Public in and for said County and State, hereby certify that the foregoing depositions of O. L. E. Weber, Richard F. Creamer, Leon LaValley, Frederic Bellile and Robert W. Haddock were taken on behalf of plaintiff in the suit of Eibel Process Company against the Minnesota & Ontario Power Company, pending in the United States District Court for the District of Maine, before me as Notary Public. The depositiou of said O. L. E. Weber was taken at Minneapolis, Minnesota, beginning at ten A. M., September 13, 1919; and the depositions of said Richard F. Creamer,

Leon LaValley, Frederick Bellile and Robert W. Haddock were taken at International Falls, Minnesota, beginning at three o'clock P. M., September 15, 1919. Said witnesses were duly sworn by me before the commencement of their testimony; that both parties were represented by counsel; that the testimony was taken stenographically by me and thereafter reduced to typewriting; that I am not of counsel for either of the parties or interested in the event of the cause; nor connected by blood or marriage with either of the parties.

In witness whereof I have hereunto set my hand and affixed my notarial seal, at St. Paul, Ramsey County, Minnesota, this sixteenth day of September, 1919.

F. H. FORD,

Notary Public, Ramsey County, Minnesota.

BOSTON, MASS., November 4, 1919.

Met pursuant to agreement at the office of Fish, Richardson & Neave, 84 State Street, at 2 P. M.

Present: HECTOR M. HOLMES, Esq., *Notary Public;*
A. C. PAUL, Esq., *Counsel for Defendant;*
HARRISON F. LYMAN, Esq., *Counsel for Plaintiff.*

DEPOSITION OF JOHN GLENN.

John Glenn, a witness called on behalf of the plaintiff, having been first duly sworn, deposes and says as follows: —

Direct Examination by Mr. LYMAN.

Q. 1. Please state your name, age, residence and occupation.

A. John Glenn; forty-five; Grand Mere, Canada; paper-maker.

Q. 2. By what concern are you employed?

A. Laurentide Paper Company.

Q. 3. What is your position in that company?

A. Foreman over the paper machines.

Q. 4. And how long have you been employed by the Laurentide Company?

A. Between 16 and 17 years.

Q. 5. That is to say, you entered their employ about 1902?

A. Somewhere along there.

Q. 6. What was your occupation during the first part of the time?

A. I went up there as a machine tender.

Q. 7. Then you became boss machine tender, and then finally foreman?

A. Yes.

Q. 8. It has appeared in evidence that the Bagley & Sewell Company put a new Fourdrinier machine in the Laurentide Mill about 1903 or 1904. Are you familiar with that machine?

A. I worked side of it.

Q. 9. What is the number of that machine?

A. No. 7.

Q. 10. And what is the width of it?

A. One hundred inch. That is, it takes a 99-inch wire.

Q. 11. A statement has been made that this machine was run in 1905 at a speed of 553 feet per minute, or thereabouts. Please tell us what the facts are as to the speed of that machine when it was first put in and thereafter.

A. When we started it up we started it, as near as I can remember, around 550, and it ran for a short time, and then we slowed it down.

Q. 12. Why did you slow it down?

A. The paper was not satisfactory.

Q. 13. And to what speed did you slow it down?

A. Well, I am not sure of that; I think it was around 475 or 500.

Q. 14. Have you any records of that machine which indicate the speed at which it ran in 1905 and 1906?

A. I think there is some here.

[Witness produces two bunches of records.]

Q. 15. What are these records?

A. Well, they are daily and monthly records that they make out, — keep a record of there; and are some that I fetched along with me when I was told to come down here.

Q. 16. These are the original records of the company, are they?

A. Yes.

Q. 17. What did you have to do with these records, Mr. Glenn?

A. I had nothing to do with them. They have a man in the office that does that, by the name of Matt. He makes out the records every day and we get the machine reports.

[The records are shown to Mr. Paul, counsel for the defendant.]

Q. 18. Do you see the reports when they are made out?

A. We see that they get a daily report every day of the running of the machines, an hour or two afterwards.

Q. 19. But do you see these records as they are made out?

A. We see these every few days; and every month we always get one.

Q. 20. Mr. Glenn, there does not appear to be in these records

anything prior to 1905, and during 1905 there is only the months beginning with August, except for January. Were there any records before this?

A. We tore down the office and moved everything over in the new office, and that is all they could find.

[It is noted that the records produced by the witness contain, among other details with reference to machine No. 7, daily speeds which are averaged at the end of each month, and that those speeds as shown are as follows: —

January, 1905	518
September, 1905	518
October, 1905	518
November, 1905	518
December, 1905	518
February, 1906	495
March, 1906	474
April, 1906	480
May, 1906	475
June, 1906	475
July, 1906	475
August, 1906	475
September, 1906	483
October, 1906	497
November, 1906	500
December, 1906	481

The records for 1905 are marked for identification "Laurentide 1905 records", and those for 1906 are marked "Laurentide 1906 records". It is stipulated that the foregoing extracts from these records, or any part thereof, may be given the same force and effect as if the records themselves were introduced in evidence, and that the records shall be produced at the trial of the case and at any time upon notice for inspection by counsel for defendant, and that if counsel for defendant requests they will be put in evidence.]

Q. 21. Is this No. 7 machine at the present time running with a pitch on the wire from the breast roll to the guide roll?

A. Yes.

Q. 22. What is that pitch; that is to say, how much higher is the top of the breast roll than the top of the guide roll?

A. Between 11 and 14 inches, something like that.

Q. 23. And at what rate of speed is the machine running?

A. Run 618 and 620 feet per minute.

Q. 24. And making good paper?

A. Good paper.

Q. 25. I understand you do not know exactly when that pitch was put in?

A. No, I cannot remember just when the pitch was put in on the machine.

Q. 26. Do you know how it happened to be put in?

A. Well, I heard that they were doing it other places, and I talked it into the company to start it there.

Q. 27. All the other machines are also given substantial pitches, are they?

[Question objected to as leading.]

A. Yes.

Q. 28. Was this increased rate of speed obtained after and as a result of the putting in of the pitch?

A. It was.

[Answer objected to as stating a conclusion of witness.]

Q. 29. How did this speed that you maintained in 1905 and 1906 and before that on this No. 7 machine compare with the speeds on your machine?

A. Why, there wasn't a great deal of difference. It might have been a little mite faster than the rest.

Q. 30. These records would show?

A. The records would show; yes.

Cross Examination by Mr. Paul.

×-*Q.* 31. What was the speed on the other machines, Mr. Glenn?

A. Now at the present time?

×-*Q.* 32. No; in 1905.

A. They were down pretty low; 450. It might have been a little higher. We never run very fast.

X-*Q.* 33. Didn't try to run very fast?

A. Well, we tried to run as fast as we could, but we could go so far and no farther.

X-*Q.* 34. All the other machines run about 450?

A. About what there is on there. Of course there is one machine at that time only run about 350 or something like that; a slow running machine downstairs. It only runs 550 now. It only runs heavy weight paper. We never speeded that up. The driers would not stand it.

X-*Q.* 35. Have you made any change in your driers since 1906?

A. No.

X-*Q.* 36. Any additional drier capacity since 1906?

A. No; that is, not on the driers. We have put on one press on No. 6 machine.

X-*Q.* 37. Any change in any of the drying devices in connection with No. 7?

A. No, nothing at all. We were getting ready to; we were going to do it this summer, but haven't got around to it yet. We put another press in and more driers on.

X-*Q.* 38. How many presses have you on the No. 7?

A. Two.

X-*Q.* 39. How many driers?

A. Twenty-eight.

X-*Q.* 40. What is the size?

A. Six-foot driers.

X-*Q.* 41. Things just the same as when the No. 7 was installed?

A. Yes.

X-*Q.* 42. Now, how fast did you run it when it was first put in, the No. 7 I mean?

A. Well, as far as I can recollect, around 550 when we first started it.

X-*Q.* 43. You didn't make any records at that time as to how fast it was running?

A. Well, if they did I didn't see any at that time; I wasn't foreman at that time; I was on the machine.

×-*Q.* 44. When you say around 550, what do you base that on — what you heard about it? I am speaking of the No. 7 machine.

A. 550, that is what was understood; I never really timed it; I understood it was running 550 when it started up.

×-*Q.* 45. That was the general understanding, running 550?

A. Yes.

×-*Q.* 46. Has there been any change in the flow through this machine since it was put in?

A. Why, no; everything is mostly the same; the new pulp mill, that is all.

×-*Q.* 47. You have a new pulp mill?

A. Yes.

×-*Q.* 48. Does that have any effect on the operation of the mill as a whole?

A. A benefit to the stock, in a way.

×-*Q.* 49. Was this the last machine put in?

A. Nos. 6 and 7 together; No. 7 started up a week or two before No. 6; 6 was a Pusey & Jones.

×-*Q.* 50. This was a Pusey & Jones, No. 6?

A. Yes.

×-*Q.* 51. What was the speed on the No. 6 when it was first put in?

A. As near as I can remember, 450 or 475; around there.

×-*Q.* 52. Did the No. 7 have any pitch to the wire when it was put in?

A. No.

×-*Q.* 53. Run level?

A. Yes.

×-*Q.* 54. Not uphill any?

A. No.

×-*Q.* 55. Just on the level?

A. Level.

×-*Q.* 56. And did it run on a level up to the time when you raised it to between 11 and 14 inches?

A. The first time we raised it we raised it six or eight inches.

×-*Q.* 57. When was that?

A. Well, I don't remember just what year it was.

×-*Q.* 58. How long was it after it was put in?

A. It must have been three or four years or more, I should think, I am not just positive on that.

×-*Q.* 59. Were you foreman then?

A. No; I was machine tender; I went on shortly after that.

×-*Q.* 60. When did you become boss machine tender?

A. When I first went there I ran one machine for eight months, and then I went on another one for four months until they put in No. 6 and No. 7; and then I went over and started up No. 6; I ran that for a year or two; I don't remember exactly.

×-*Q.* 61. You don't remember just when you became boss machine tender?

A. No; in a year or so.

×-*Q.* 62. How long did you run No. 7 with the six or eight-inch pitch?

A. I couldn't say how long we ran it at that pitch.

×-*Q.* 63. Haven't you any definite recollection about that?

A. No.

×-*Q.* 64. Did you get as good results with the six or eight-inch pitch as you did with the 11 or 14?

A. Far from it.

×-*Q.* 65. But you have no idea as to how long you ran it with the six or eight-inch pitch before you changed it to 11 or 14?

A. No; I couldn't say definitely.

×-*Q.* 66. Do you know whether it was a six or eight-inch pitch?

A. No; I couldn't say that.

×-*Q.* 67. Do you know whether you raised it to 11 or 14?

A. Between the two.

×-*Q.* 68. Then you don't know what is was?

A. Not within three inches.

×-*Q.* 69. Did you make any change in the amount of head that you carried at any time after you put in that machine?

A. No; we might have lowered the head a little bit.

×-*Q.* 70. Lowered it when you raised the pitch?

A. A little bit. We vary that on changing around a little bit.

×-*Q.* 71. How much?

A. Sometimes an inch or two; we vary the head; different machine tenders will come and change their machines some.

×-*Q.* 72. What is about the average head that you carry?

A. Five or six inches.

×-*Q.* 73. Did you raise all the machines to the six and eight-inch pitch at the same time?

A. No; No. 2 machine was the first machine with pitch in the mill.

×-*Q.* 74. They were all level until that time?

A. All but No. 4 machine; that was running uphill.

×-*Q.* 75. Do you know when you gave No. 2 the first pitch?

A. No; I couldn't swear just when we pitched it.

×-*Q.* 76. You don't know how much pitch you gave it at first?

A. Around eight inches.

×-*Q.* 77. All the machines run at the same speed now?

A. Pretty near.

×-*Q.* 78. Why was it that No. 2, back in 1905, was running at an average of 450, while No. 7 was running at an average of 521?

A. Well, No. 7 was the newer machine; No. 2 was one of the oldest machines in the mill.

×-*Q.* 79. You say that your understanding is that they lowered the speed of No. 7 a short time after it was put in because it was not giving satisfaction?

A. The paper was not satisfactory. I was working right side of it on No. 6, and they had to throw away a lot of the paper because it was not right, and work it over.

×-*Q.* 80. What was the matter with it?

A. It wasn't formed up properly.

×-*Q.* 81. What speed was it running at then?

A. The speed they started it at, 550.

×-*Q.* 82. And how much did they drop it?

A. Well, I couldn't say. I should call it between 475 and 500 they dropped it down.

×-*Q.* 83. Then how did they get it up to 521 again?

A. We changed the speed. We were running water power wheels, and the speed varies up and down.

X-*Q*. 84. Then the difference between 480 and 521 was due to the change in the water power?

A. When we run water power the speed was up and down, never was steady.

X-*Q*. 85. That made a difference of 40 or 50 per minute?

A. At times, and then some other machine tenders would come in and speed the machine up; they would want to make more than other men.

X-*Q*. 86. Others would want to cut them down?

A. Yes, others would come in and slow them down.

X-*Q*. 87. Do you know how fast you ran the No. 7 machine at six or eight-inch pitch?

A. Well, I should think around 500 somewhere: I couldn't say just what it was.

X-*Q*. 88. You don't know whether you increased the speed or not?

A. It wasn't up to where it is now.

X-*Q*. 89. Now, as I understand you, during all the time covered by these records that have been produced here, 1905 and 1906, all these machines were running with the flat wire except No. 4, which was running uphill?

A. All were flat except No. 4, which was running uphill, two and three-quarters inches or one and three-quarters inches; I forget which; something like that.

X-*Q*. 90. Have you worked in any paper mill making news print except the Laurentide?

A. I worked at the Glens Falls International Mills for seven years.

X-*Q*. 91. When was that?

A. Before I went to the Laurentide. Then I worked in Hudson Falls about four years for the Allen Brothers, but they made wall paper.

X-*Q*. 92. You made news paper all the time you have been at the Laurentide?

A. Yes.

X-*Q*. 93. I wish you would explain just a little more fully what you mean by the change in your water power making a difference in the speed of the machine.

A. Well, we couldn't keep the governors steady in a way; and as I told you the machine tenders would try to make a little more than the others. We got jacked up for it and we tried to keep it down. I have done the same thing myself,—try to make a little more production than the other men.

[Cross-examination closed.

Signature waived.]

DEPOSITION OF PETER TALBOT.

Peter Talbot, a witness called on behalf of plaintiff, having been first duly sworn, deposes and says as follows:—

Direct Examination by Mr. LYMAN.

Q. 1. Please state your name, age, residence and occupation.

A. Peter Talbot; age, forty-three; Woodland, Maine; superintendent of the paper department and sulphite department of the St. Croix Paper Company.

Q. 2. How long have you been employed by the St. Croix Paper Company?

A. Fourteen years.

Q. 3. When you began to work for them had their mill been completed?

A. No, it wasn't.

Q. 4. It was being built, was it?

A. It was in construction.

Q. 5. How many machines were put in when it was built?

A. Two.

Q. 6. Both of them Pusey & Jones machines?

A. Yes, sir.

Q. 7. And they are known as the No. 1 and No. 2 machines, are they?

A. Yes, sir.

Q. 8. And when did these machines start up?

A. The first one started up on the 22d of September, 1906, and the second on October 6, 1906.

Q. 9. Did you help install these machines?

A. Yes, sir.

Q. 10. After the machines were installed what was your work there?

A. Running one of them.

Q. 11. That is, machine tender?

A. Yes, sir.

Q. 12. After you finished as machine tender, what was your work?

A. I was boss machine tender, day foreman.

Q. 13. And after that you became superintendent of the paper and sulphite department?

A. Yes, sir.

Q. 14. Was there a No. 3 machine put in subsequently to that?

A. Later on; yes; in 1908.

Q. 15. And these are the three machines that are there now?

A. Yes.

Q. 16. In these Pusey & Jones machines, was there any adjustment provided for the breast roll?

A. Well, there was a screw on the breast roll to elevate them either a one and one-half inch pitch or to run it uphill an inch and a half. That was when the machine was built.

Q. 17. Both machines were alike in that respect?

A. Both were alike; yes, sir.

Q. 18. Now when these machines started up, at what speed did they run?

A. Four hundred twenty feet.

Q. 19. After that they were speeded up somewhat, weren't they?

A. They were speeded up as high as 535 feet.

Q. 20. With the wire running level?

A. Well, it was one and one-half inch pitch; the top part of the screw pitched one and one-half inches.

Q. 21. Did you pay any attention to that adjustment, by the way?

A. No, we didn't pay any attention to it at all; that wasn't to be considered at all, whether it was pitched or wasn't pitched.

Q. 22. Now, at some time subsequently a blocking was put under these breast-roll ends and high pitches put in, were they?

A. Yes.

Q. 23. What was the extent of these pitches?

A. Twelve inches.

Q. 24. Do you know when these pitches were put in?

A. These pitches were put in between May and August, I couldn't say just what month, of the following year, 1907.

Q. 25. How did these pitches happen to be put in?

A. Mr. Ross, who was superintendent at that time, heard that over in Rhinelander, Wisconsin, they had pitched the wires and were getting a good sheet of paper by running faster, so he decided to pitch his.

[Answer objected to, as apparently the witness is stating something of which he has no personal knowledge, therefore hearsay.]

Q. 26. When these pitches were put in in 1907 was the speed increased?

A. Yes, sir.

Q. 27. How much were these first pitches?

A. How many inches?

Q. 28. Yes.

A. Twelve inches.

Q. 29. And what speed were they run at after the pitches were put in?

A. They run as high as 600 feet.

Q. 30. What are they running now?

A. They run at 650 feet.

Q. 31. Are they making good paper at that speed?

A. Yes, sir.

Q. 32. Why did you say first that they run up as high as 600 feet and then that they are running now at 650; was there some change made in the machinery thereafter?

A. We pitched them a little more and made other improvements to make a formation of the sheet so we could run them faster.

Q. 33. Did you change the engine or the pulleys?

A. Yes; we had to change the pulleys on the main line, because when they were up 600 feet the engine was at its full capacity with regard to the speed of the fly wheel, and we put bigger pulleys on

the main line to slow the engine down and get more speed out of the machines.

Q. 34. When these machines were originally installed were the suction boxes level?

A. Yes, sir.

Q. 35. Prior to your work with the St. Croix Paper Company, what other paper mills did you work in?

A. I worked in Berlin, New Hampshire, for the International Mills, and worked for the International Paper Company in Niagara Falls; and I also worked in Bellows Falls for the International, the Great Northern at Millinocket, and worked in Sturgeon Falls, Ontario.

Q. 36. When did you begin work in the paper mills?

A. I began work in the paper mills in 1890.

Q. 37. When you were how old?

A. I was fifteen years old.

Q. 38. Prior to the time when these pitches were put in because of the example that had been set at Rhinelander, had you ever seen any wires having a downward pitch at all?

A. No, sir.

Q. 39. The regular practice was to run level, was it?

A. Yes, run it level; all the machines I ever worked on previous to that one in the St. Croix Paper Company were all level.

Cross Examination by Mr. Paul.

X-*Q.* 40. Where is the St. Croix Paper Company located?

A. Woodland, Maine.

X-*Q.* 41. Who is the present superintendent of the company?

A. The general superintendent is Mr. Parant; L. J. Parant.

X-*Q.* 42. You have nothing to do with the running of the paper machines now?

A. I have all to do with them; what I mean by that, I supervise all the machines.

X-*Q.* 43. You have charge of the machines?

A. Yes, sir.

X-*Q.* 44. How many machines have you?

A. Three.

×-*Q.* 45. You said No. 1 and No. 2 were Pusey & Jones machines. Did you say what No. 3 is?

A. No. 3 is Rice, Barton & Fales machine.

×-*Q.* 46. They all have the same pitch now?

A. No; No. 3 has got 14 inches.

×-*Q.* 47. And what are the others?

A. Eighteen.

×-*Q.* 48. All run at the same speed?

A. No; the No. 3 runs a little slower.

×-*Q.* 49. How much slower?

A. About 35 or 40 feet.

×-*Q.* 50. What is the speed of Nos. 1 and 2?

A. Six hundred and fifty.

×-*Q.* 51. Were they level before they were given the 18-inch pitch?

A. No; there was 12-inch pitch first put on them.

×-*Q.* 52. How long did they run at 12-inch pitch?

A. They ran at 12-inch pitch about — I pitched them four years ago; I put them up from 14 to 18 four years ago, and they ran from 1907 to four years ago, when they were put up to 18 inches.

×-*Q.* 53. At what pitch did they run from 1907 to four years ago?

A. Twelve inches.

×-*Q.* 54. These were the only pitches at which you ever ran them, 12 and 18?

A. Twelve and 18; yes, sir.

×-*Q.* 55. Did you say that when they were first put in they were run level?

A. There was about one and one-half inches on the screw; there was an adjustment screw on it.

×-*Q.* 56. And how fast were they running at that time?

A. They ran up as high as 535.

×-*Q.* 57. You never tried any intermediate pitch, anything between one and one-half inches and 12 inches?

A. No, sir, not on those machines.

×-*Q.* 58. Did you make any change in the machine except to raise the pitch?

A. Oh, yes, made some changes.

×-*Q.* 59. What changes?

A. Made changes in flow of the stock, such as the head box.

×-*Q.* 60. Did you make any improvements in pulp since 1906 or 1907?

A. Yes, sir.

×-*Q.* 61. What improvements?

A. We experimented on the pulp by getting it more suitable to making paper.

×-*Q.* 62. When did you begin to make improvements?

A. We kept doing that right along. We change conditions at a certain time of the year. We continue changing the pulp at different periods of the year. In the summer months we run the pulp slower, not grind it quite so long and to meet conditions of the warm weather; and in the fall of the year we change again. In the spring of the year, too. We change four or five times a year, the condition of the stock to meet other conditions.

×-*Q.* 63. Do you make any change in the speed of the machines?

A. No; we run it just as fast as we can — as fast as the engine will drive it; at the present time 650.

×-*Q.* 64. Made any change in the engine since 1906?

A. No; we made a change on the pulleys on the main line.

×-*Q.* 65. You can run the machine faster now than you could in 1906?

A. Oh, yes.

×-*Q.* 66. What was the fastest at which you could run in 1906?

A. Six hundred.

×-*Q.* 67. How fast can you run them now?

A. Six hundred and fifty is as fast as I can run them now.

×-*Q.* 68. Always the same kind of paper?

A. Yes, sir.

×-*Q.* 69. Have you worked in any other mills than those which you have named in direct examination?

A. No; those are the only mills I ever worked in.

Redirect Examination by Mr. LYMAN.

Q. 70. When you said a moment ago that the highest speed at which you could run in 1906 was 600, you meant that as far as the engine was concerned it could be driven at 600?

A. Yes, sir.

Q. 71. You also said that 535 feet was the highest that you could get on account of the other conditions on the machine?

A. Yes; in 1906 when we ran 535 per minute; we got them as high as that, but we didn't make paper as satisfactory. Consequently we had to run them down to 500 feet to make paper good enough for the market.

Q. 72. Now, the change in the pulleys came after they were blocked up to 12 inches and before you blocked them up to 18 inches?

A. Yes, sir.

Q. 73. In order to make that paper at 500 on these machines without any blocking, did you have to make paper heavier than you otherwise would have?

A. Yes.

Q. 74. How did that enable you to run faster?

A. When we ran paper, say, for instance, the regular weight was 32 pounds, if we ran it up to 34 or 35 the machine would run more successfully, because the more stock it would fill out better, spread the sheet better.

Q. 75. What does the purchaser have to say if you get paper up to 35 pounds?

A. We did get it up, but they complained so much about having to pay for extra weight of paper that we had to do something to get it down to 32 pounds or around 32 pounds; consequently we had to reduce the speed of the machine at that time.

Q. 76. Why does the user of the paper kick if you get paper weighing 35?

A. Because they buy paper by the pound, and if it is overweight they don't get the number of copies out. It is sold by the ream or pound, and if the roll weighs 1,200 pounds and consists of 35-pound

paper, they won't get as many copies as out of a similar roll that will weigh 32 pounds.

[Deposition closed.

Signature waived.

Adjourned to Wednesday at 10 o'clock.]

Boston, Mass., November 5, 1919.

Met pursuant to adjournment. Counsel present as before.

DEPOSITION OF ELLIOT F. ALDRICH.

Elliot F. Aldrich, a witness called in behalf of the plaintiff, having been duly sworn, deposes and says as follows: —

Direct Examination by Mr. Lyman.

Q. 1. You are the same Elliot F. Aldrich who has given a previous deposition in this case, are you not?

A. I am.

Q. 2. Have you recently made an inspection of the defendant's machines at its plant at International Falls, Minnesota?

A. I saw them for a short time in September.

Q. 3. On what date?

A. September 15th, 1919.

Q. 4. Referring to the No. 1 machine, what did you find the fact to be as to the amount of head that was carried in the pond behind the slices?

A. I found it to be just about seven and seven-eighths inches.

Q. 5. What was the width of the slice opening?

A. I was not able to measure the slice opening on the No. 1 machine, but the No. 3 machine happened to be down while I was there and I did measure it on this machine and found it to be approximately one and one-half inches.

Q. 6. Did you also ascertain the speed at which this machine was making paper?

A. I found that the machine was making paper at the rate of about 622 feet a minute, or 85 revolutions of the 28-inch lower calender roll.

Q. 7. You mean that was a 28-inch diameter?

A. Yes.

Q. 8. And it was 85 revolutions per minute?

A. Yes.

Q. 9. And did you also ascertain the wire speed on that machine?

A. I did.

Q. 10. What was that, and how did you ascertain it?

A. I ascertained it by counting the revolutions of the lower couch roll, which I found to be 78 per minute. And this roll being 28 inches in diameter I found that the speed of the wire was 572 feet per minute.

Q. 11. What means did you take to measure the depth of the pond?

A. When I arrived there I measured the distance from the top of the slice to the surface of the stock in the pond, which I found to be just about two and one-half inches. Then I measured the distance from the top of the slice to the wire, which I found to be ten and three-eighths inches. Subtracting the two to arrive at the head on the slice, was seven and seven-eighths inches.

Q. 12. Did you also examine the No. 3 and No. 4 machines?

A. I did not make a careful examination of them, but I roughly figured the pitch of the wire, and as stated before this machine being down at the time I measured the slice opening.

Q. 13. Did these machines appear to be running under substantially the same conditions as the No. 1?

A. No. 4 machine was; No. 3 as I said was not running.

Q. 14. Mr. Carter, defendant's expert, has produced certain diagrams and done certain figuring with relation to conditions prevailing upon defendant's machines Nos. 1, 3 and 4. Do you understand the method by which he arrived at his figures?

A. I do.

Q. 15. Taking that same method of computation which Mr. Carter used, will you figure out the relative proportions of the total speed of the stock on the wire on the No. 1 machine, which are due respectively to head, to pitch on the wire, and to drag, assuming the conditions as you saw them operating,— that is to say, assuming a head of seven and seven-eighths inches, instead of the six or seven inches assumed by Mr. Carter, assuming a slice opening of one and one-half inches instead of one inch as assumed by Mr.

Carter, assuming a wire speed of 572 feet per minute instead of the 585 feet per minute assumed by Mr. Carter, and assuming all other conditions as assumed by Mr. Carter,— that is to say, a "net pitch" of four and one-half inches and a total pitch of thirteen and one-half inches, and basing your figuring upon the velocities shown in Defendant's Exhibit T-8?

A. With a total depth of pond of seven and seven-eighths inches and a slice opening of one and one-half inches, the average head on the slice would be seven and one-eighth inches. A head of seven and one-eighth inches according to the table would produce a velocity of just about 370 feet per minute. This would be the average velocity of the stock as it comes on to the wire. When the stock has reached a point on the wire represented by four and one-half inches net drop, or one-third the distance down to the guide roll, its total fall has been seven and seven-eighths inches plus four and one-half inches, or twelve and three-eighths inches total. The velocity corresponding to twelve and three-eighths head is 489 feet per minute. The difference between 489 feet per minute and 370 feet per minute equals 119 feet per minute, due to pitch. The difference between 572 feet per minute and 489 feet per minute equals 83 feet per minute, due to the wire.

Q. 16. Now, will you make a similar computation assuming the same conditions as before except that you assume a wire speed of 585 feet per minnte as assumed by Mr. Carter instead of the 572 feet per minute which you found to be the true wire speed.

A. This would not change the computation due to the pitch of the wire and would add simply 13 feet on to the effect of the wire itself, making 96 feet per minute.

Q. 17. Did you carefully count the revolutions of the lower couch roll so as to get an accurate and sure measurement of the wire speed?

A. I did, and for two and three minutes at a stretch in order to get greater accuracy.

Q. 18. Does the ratio between wire speed and paper speed which you found to exist on this machine tally with the results of your other experience in similar measurements?

A. It does.

Q. 19. Mr. Carter appears to think that in your previous testimony you asserted that a head of two and one-quarter inches was common practice on paper machines at the time of and prior to the date of Eibel's application for patent? Did you intend to make any such statement?

A. I had no such intention. The common practice on news machines at that time was from two and one-half to three times that amount. While on a slow speed machine two and one-quarter inches head might often be a proper one, on a high speed news machine a head of two and one-quarter inches would not cause sufficient stock to come on to the wire.

Q. 20. Mr. Carter states it as his opinion that the Eibel patent evidently contemplates the use of as nearly no head at all as is possible; that is to say, that as nearly zero velocity as can be attained. What have you to say as to that?

A. I think there is no justification in the patent for such an opinion, and that if Eibel had contemplated making such a radical step as that over the existing practice he would have made some mention of it in his patent specifications.

Q. 21. In this connection Mr. Carter refers to your answer in your previous deposition to X-Q. 230, in which you said that the Eibel invention can be employed without any head at all. What did you mean by that answer?

A. What I meant, of course, was no static head on the slice, or in such a case that the slice might be dispensed with and still use the Eibel invention. In such a case, of course, a considerable velocity head would have been required to get the requisite amount of stock on the wire.

Q. 22. What have you to say as to whether Mr. Carter's method of computation provides a true test as to whether or not a given machine embodies the invention disclosed by Eibel?

A. I think that Mr. Carter is quite unwarranted in including the computation due to the head, it being immaterial what head is employed in the operation of the Eibel invention except that upon it depends the amount of pitch which is necessary; everything else

being equal, a smaller head calling for a higher pitch or a higher head a smaller pitch, the head of course always being small enough so that the speed of the stock is less than that of the wire. It is plain to me that when Eibel speaks of the stock running by gravity he is referring to the gravity of the declining wire. In an ideal Eibel installation the effect of the pitch of the wire will easily preponderate over the accelerating effect of the wire itself. Drag must still be a factor, as it is impossible to dispense with it as long as any relative velocity exists between the stock and the wire. Eibel adds a new accelerating factor and puts his emphasis upon this. There is no question in my mind but that substantial benefits may ensue where a substantial pitch is employed, and yet the effect of the pitch expressed in feet per minute does not preponderate over the effect due to the wire. This numerical preponderance does not tell the whole story, as gravity might be a really more important factor than the wire, even though numerical preponderance did not exist. The wire itself is ill-adapted for any considerable amount of acceleration, but gravity is an ideal means as it causes equal acceleration for the whole depth of the stream, the bottom being affected equally with the top, and is a constant acceleration as well, as the stock proceeds down the wire. As the stock emerges from the slice, gravity commences immediately to act vigorously upon the stock to bring about its acceleration, amounting in the case of the Minnesota & Ontario machine in its accelerating effect to very many times that due to the drag of the wire, as the drag is very insignificant at that time. The ratio of course gets less and less as drainage proceeds and the stock becomes more and more concentrated, but the difference would not be very marked in this ratio for some little distance down the wire. Later the fibres lose their freedom of motion quite rapidly and active formation sets in. Up to this time the acceleration accomplished by gravity greatly exceeds that by the wire itself, and this is a critical stage in the formation of the paper. During the period when the stock is getting up to the speed of the wire, gravity greatly predominates for the greater portion of the distance. During the last foot or so the wire quite suddenly causes the stock to take the speed of the

wire, the fibres adhering to the wire on account of the greater concentration of the stock. If this were not so, the stock would tend to overrun the wire as soon as it had reached the speed of the wire, and this would be a detriment. Where the great importance of the speed of the wire comes in is, that where the stage has been reached when the active formation commences and the fibres lose freedom of movement gravity shall have brought the stock up to the approximate speed of the wire, a great relative velocity at this point such as would be present with a horizontal wire being very objectionable, tending to cause agitation of the stock when the fibres should be disturbed as little as possible.

Q. 23. Is the question of the substantial pitch or lack of pitch of particular importance at those stages of the wire before the period of active formation or after the period of active formation?

A. It is very important indeed preceding formation; while considerable relative velocity may exist at the beginning without detriment to the paper, it is very important that active acceleration should commence immediately when the stock emerges from the slice.

Q. 24. On those stages of the wire after formation is practically complete does it make any difference whether the wire is pitched or not?

A. I would say not; there is no necessity of pitching the wire all the way to the guide roll except as a matter of convenience, and because it is difficult to do otherwise.

Q. 25. Mr. Carter says that it is his understanding that the Eibel patent proposes to eliminate altogether the effect of friction or drag of the wire on the stock and to depend solely upon the pitch of the wire to bring about the acceleration of the stock. What have you to say as to that?

A. It would be an impossibility.

Q. 26. Mr. Carter says that in order to come within this patent the accelerating effect due to pitch must exceed the acceleration due to the other factors of head and drag of the wire. Judged by this test, would the machines of the Remington-Martin Company that were held by the Court of Appeals in the Second Circuit to infringe

this patent have been within the patent? In answering please state with reference to each of those two machines what the effect due to pitch was and what the effect due to the other factors was, computed in accordance with Mr. Carter's methods.

A. In the case of the large Remington-Martin machine figured according to Mr. Carter's method, the pitch would accomplish about 194 feet, while the other factors would contribute about 311 feet; in the case of the small machine with 20 inches pitch the pitch would accomplish about 207 feet and the other factors 318 feet.

Q. 27. Defendant has put in evidence an extract from Clapperton on practical paper making, reading as follows:—

> "A 40 ft. wire, travelling up to 100 ft. a minute, will require a pitch of about 3/4 of an inch from the breast roll to the first guide roll, while if driven at a speed of 200 ft. a minute a 1-1/4 inch pitch will be necessary. It is the custom with some engineers to put in very heavy breast-rolls, though for what purpose it is difficult to see."

Do you understand this quotation to be referring to an uphill pitch or a downhill pitch?

A. I read this years ago, and am unable to say what the author had in mind; previous to making the statement the author seems to be dealing principally with high-grade papers and slow stocks, slow speeds of running and short wires; it looks reasonable to me to think that the author had the question of drainage in mind, and that he intended the wire to run uphill, uphill pitch being very common on slow speed machines. Whatever his object, it is very apparent that he did not have the Eibel idea in mind, as even a one-inch head on the slice would have caused a higher stock velocity than the speed of the wire at 100 feet per minute, and a head as low as two inches would have caused a stock speed of close to 200 feet per minute. In these instructions I do not see a shadow of the Eibel idea, and it looks more reasonable to me that the author had an uphill pitch in mind.

Q. 28. In Mr. Carter's diagram No. 2 and No. 3 he has in each case assumed a point of speed equality between stock and wire one-

third of the distance from breast roll to guide roll. In his diagram No. 2 he is assuming conditions on the defendant's machines "operating as per plaintiff's testimony", and I understand it to have been your testimony in your previous deposition that under those conditions the point of speed equality would have occurred at the point assumed by him. If, however, the conditions assumed by him in his diagram No. 3, namely, a lower head, a smaller net pitch and a greater velocity of wire were assumed, would the point of speed equality have occurred at that distance?

A. Both of these factors, the lower head and the increased wire speed, increase the distance from the slice to the point where speed equality is reached.

Q. 29. Mr. Argy, a witness for the defendant, testifying about the machine known as No. 8 at the Palmers Falls Mills, testified that it ran at a speed of 506 feet per minute. He also produced records showing that this machine produced in July, 1900, 805,639 pounds of paper; and that it produced in August 930,098 pounds. He said that these machines ran 22 hours a day six days a week. The No. 8 machine was a 90-inch machine. With these facts are you able to figure out what actual paper speed this machine must have maintained in order to get those productions?

A. I could do that, or I could take the 506 feet and figure out what the production should have been.

Q. 30. Suppose you figure it out either way.

A. According to those tonnages, there were produced in July about 16 tons per day and in August 17 tons per day from this 90-inch machine. Mr. Argy does not state what the trim of the paper was, but it would be very safe to assume that it was at least 72 inches. He does not state, either, the weight of paper, but assuming it to be of standard weight of 31½ pounds per ream, a speed of 506 feet per minute running only 22 hours per day (which was very conservative) the production would have been 21 tons. If it was only 16 and 17 tons the deduction would be either that the machine did not maintain a speed of 506 feet per minute while it did run, or else that the paper was breaking down very frequently, due to the high speed.

Q. 31. What speed consistently maintained would produce those 16 or 17 tons?

A. Taking the average production of 16½ tons, a maintained speed of 398 feet per minute under the conditions assumed would have produced 16½ tons.

By Mr. Lyman. I offer in evidence the following patents: —

United States Patents.

Barrett & Horne . .	No. 634,228
Savery	No. 675,072
Kutter	No. 654,651
Kutter	No. 683,949
Moore & White . .	No. 684,081
Savery	No. 742,239
Moore & White . .	No. 809,832

British Patents.

Craig . . .	No. 24,669 of 1893
Johnson . .	No. 3,612 of 1900
Davidson & Kitchin	No. 14,193 of 1895

German Patents.

Seybold	No. 128,626
Fuellnar . . .	No. 99,603
Stapf	No. 149,841
Voith	No. 102,809
Schnitzler . . .	No. 144,508
Bruderhaus . . .	No. 146,021
Andres	No. 83,020

[Counsel for defendant objects to the offer for the reason that patents No. 765,072 and 742,239 (Savery) have already been made a part of the record and the other patents enumerated in the offer are not proper rebuttal evidence and are immaterial.]

Q. 32. Will you consider the patents just put in evidence and explain what, if any, bearing they have upon the novelty of the invention disclosed in the Eibel patent in suit?

[Same objection by Mr. Paul.]

A. I have read all of these patents and, in my opinion, they disclose no knowledge of the principles brought out in Mr. Eibel's invention. In the Eibel specification Mr. Eibel states that he is "aware that means have been provided for adjusting the breast-roll end of the wire to different elevations, usually below the level, to provide for running with different grades of stock,—as, for instance, with quick stock and slow stock" (page 1, lines 82 to 86). This statement, while accurate, fails to state the extent of pitch known to the prior art, and accordingly the patents and other examples of pitched wires in evidence in this case are very instructive as proving that any substantial pitch of the wire was unknown to the prior art. Speaking generally of these patents, I would say that the object of the adjustment is plainly stated by the inventors as being to provide means for dealing with stock of various grades, *i. e.*, of different degrees of water retentivity, a slight downhill pitch being given to the wire where it is desired to hasten the stock slightly to prevent a loss of the water too early on the wire, and an uphill pitch being given where it is desired to give the stock a longer time on the wire in which to part with the water.

As I pointed out in my deposition given in connection with complainant's *prima facie* testimony in this case, it is essential that the stock shall have a fairly definite consistency when it reaches the dandy roll, since the stock varies in "quickness", *i. e.*, its retentivity of water or in its dilution (depending upon the character of paper to be made) recognized as desirable to compensate for these differences in its character by making a slight adjustment in the pitch on the wire, so that slow or highly diluted stock may be kept longer on the wire before reaching the dandy roll, and may thus be given a greater time for drainage than quick or less diluted stock and *vice versa*. The patents referred to, showing a pitch of the wire from the breast roll, are merely illustrations of this drainage adjustment, which is referred to on the face of Eibel's specifications and described at length in my previous deposition. In many cases the patentees definitely and clearly describe this as being the purpose of the adjustment, and in no case does any one of them give any intimation that the adjustment is for the reduction of the rela-

tive velocity of stock and wire. In most cases the whole adjustment provided is from a position in which the breast roll is below the level of the guide roll, upward to a horizontal position of the wire, and in no case is an adjustment provided such as to give the wire any material pitch even when the breast roll is raised to the utmost possible extent, the adjustment evidently being limited to a possible inch or two above or below the level in all cases.

The movement of the breast roll is always referred to as an adjustment, and the mechanism is in every case only such as would be expected to be used for a slight movement of the making wire. In the case of each one of these patents the suction boxes remain horizontal as the breast roll is adjusted, and consequently any elevation of the roll greater, I would say, than two or three inches at the most would cause the making wire to leave the suction boxes, and would thus defeat their function of extracting the water from the web of paper. The patents cover different specific forms of mechanism for making this adjustment.

In no case is there any hint that the adjustment is for the purpose of reducing the relative velocity of stock and wire by giving the stock a "gravity feed" or acceleration, and thus doing away with the waves and ripples caused by excessive relative velocity, which has hitherto been the limiting factor in the speed of production of light papers on the Fourdrinier wire.

Before discussing these patents, I wish to remark that in practice there was very little, if any, use ever made by paper manufacturers of these adjustments, although I have no doubt that they were supplied with machines by the machine makers in some instances. The liability of the adjusting mechanism to rust and get out of repair by reason of its constant exposure to moisture was doubtless one reason for not using it. So far as I can recollect, I never saw a machine in which the wire was running with any appreciable downward pitch prior to the date of the Eibel patent.

I will briefly refer to each of the patents in evidence.

BARRETT AND HORNE, No. 634,228.

This patent shows a specific mechanism for accomplishing the vertical adjustment of the breast-roll end, which Eibel says in his patent was old in the art and which I have mentioned above. This is accomplished by means of cams c, on which the breast-roll end of the machine rests and which are operated by a hand wheel d^3. Referring to Fig. 1, the Fourdrinier wire D is seen passing over the breast roll (unlettered) at the right, and thence over the table rolls C. The "shake frame" is supported on a frame or support comprising longitudinal beams a and transverse beams b, which support is provided with wheels or other anti-frictional devices a^5 at the breast-roll end and a^2 at the suction-box end. The wheels a^5 at the breast-roll end are supported on cams c, c (Fig. 2), mounted on a shaft c^2, which is supported by the pillars c^4, c^4. By rotating through the hand wheel d^3, the worm d, and therefore the gear wheel c^5 attached to the shaft c^2, the rotation of these cams c, c can be effected, and by this means the wheels a^5, a^5, and, with them, the whole breast-roll end of the machine can be raised or lowered slightly. The purpose of this adjustment is clearly set forth by the patentees in the following language (page 1, lines 16 to 30):—

> "In certain kinds of pulp, notably the wood-pulp which is now largely used in making paper, the water drains away very rapidly, so that the pulp may become nearly dry, before it leaves the shake-frame, and thus not be properly laid when it reaches the rollers. This tendency may be obviated to a considerable extent by downwardly inclining the shake-frame toward the rollers so that the water tends to travel along with the pulp, and will not, therefore, drain out through the wire so rapidly. It is further desirable that the amount of inclination or slope should be variable, so as to adapt the machine for pulp of different kinds of grades."

Accordingly, the invention consists of means whereby the breast-roll end of the machine is arranged to be raised or lowered, so that the shake frame can be inclined at an angle to the permanent rails, or, if desired, retained level.

It thus appears definitely and clearly that the adjustment provided in this Barrett and Horne machine was merely the adjustment for drainage purposes to deal with different grades of stock, which Eibel refers to in his specifications as the prior art. The whole possible adjustment in both directions is the extent of eccentricity of the cams c, c, which is obviously very slight, from the fact that cams are employed for the purpose. Besides, the patentees indicate this when they say that the distance through which the breast roll is to be moved is "relatively small" (page 2, lines 17, 18). The fact that only a very slight movement of the breast roll is contemplated is also proved by the fact that the adjustment affects only the shake frame end of the machine and does not extend to that part of the frame which carries the suction boxes, the shake frame being pivoted on the column a^4 by means of the roll or wheel a^3 (Fig. 1).

There is not a hint in this patent that the slight pitch which the mechanism makes possible is intended for or that it can be used for diminishing the relative velocity between stock and wire, or for the purpose of smoothing out the sheet; on the contrary, the only intimation that the patent contains as to the use for which the adjustment is intended, and that which is to be inferred from the patent, is that with a "slow" stock the wire would have a horizontal, or perhaps an uphill, position, while with a "quick" stock it might have a slightly downhill pitch. Following the instructions of this patent, a paper-maker would run his machine with a downwardly-pitched wire while working at a low speed, and with the wire on the level, or with an upward pitch, when working at a higher speed, provided that the stock in the first case was "quick" and in the second case "slow". This procedure is, of course, diametrically opposite to Eibel's instructions. This patent contains no hint of any relation between speed of the wire and pitch of the wire, and the trivial pitch which is possible in the machine it describes might, following its instructions, be used under such conditions that it would actually increase the relative velocity between stock and wire, and cause increased disturbance on the sheet. This well illustrates

the difference between the theory of these adjustments and that of Eibel.

PATENT TO SAVERY NO. 675,072.

This is a patent the main purpose of which is to improve the construction of the shake frame so as to better perform the function required of it in felting the fibres together. Incidentally, there is provided a slight breast roll adjustment. Fig. 1 shows a side elevation of a Fourdrinier machine embodying the improvements, the wire *w* passing over the breast roll 19, table rolls 35, suction boxes 5 and guide roll (unnumbered), to the lower couch 1. The table rolls, form the upper members of the trussed shake frames. This frame has shake pivots 13, and pivots for vertical adjustment 9, which are located just in front of the first suction box 5. A U-frame 14 (Fig. 5) extends across the front end of the machine, and to the tops of the legs of this frame are bolted the table rails 6, while near the bottom of these legs the lower truss members 27 are secured. Brackets 26 projecting from these legs carry set screws 25 for the accurate adjustment of the breast roll with reference to the table rolls, and to these legs are also bolted the bearings 20 (Fig. 4) for the breast roll. The U-frame is supported by projecting ears 44, through which pass set screws 45, which rest directly upon cap pieces 37, which in turn rest upon vertical supports 36 (Figs. 3, 14, 15). These supports carry the weight of the shake-frame end. A slight vertical adjustment for the breast roll is secured by means of the set screws 45. The connection for the shake attachment is made at point 47 of the U-frame 14, shown in Fig. 3.

After enumerating the advantages which result from this method of construction, the patentee calls attention at line 75, page 1, to the desirability of providing for a vertical adjustment of the breast roll, so that the shaking section may lie in a horizontal plane, or above or below such plane, according to the stock which is being handled and the character of the product desired; this lowering and raising is always referred to in the specifications and claims as an adjustment, and is to be used as explained at line 107, page 3, "according to the character of the stock employed". Fig. 1 shows the wire as absolutely horizontal, which is presumably its normal

position. The amount of the adjustment provided cannot be stated with any great accuracy, but the adjustment of the set screws 45 as shown by Fig. 5 would seem to indicate that an adjustment either up or down of approximately the diameter of the set screw could be used, and the set screw I should judge to be about one and one-quarter inches in diameter. Only a very slight adjustment above the horizontal plane could have been used anyway, since otherwise the rails being pivoted at point 9, which is some distance in front of the first suction box 5, the wire would lift off the suction box. Another reason for concluding that no substantial elevation or depression of the breast roll is intended is the method of connecting the shake bar rigidly by bolts at point 47 (Fig. 3) to the member 14, which shares in any vertical movement which the breast roll has. Even if the bar 48 has some spring in it, it would be very unmechanical to connect it in this manner if the member 14 had more than an insignificant vertical adjustment. The adjustment in this case, like that in the Barrett and Horne patent, is solely for the purpose of regulating the "drainage" according to whether the stock parts with its water more or less quickly, and the remarks which I have made as to the Barrett and Horne patent apply to this one also.

What this patent meant to the art is best shown by what was done with it. This patent was one belonging to Pusey & Jones Company, and I happen to know that the Pusey & Jones Company, of which the inventor Savery was the president as late as 1905, the year in which the Eibel invention was being developed, furnished a large high-speed news machine, the specifications for which were signed by Mr. Savery himself, supposed to embody the best principles of construction known at that time, in which the adjustment provided was one and one-half inches above and one and one-half inches below the level.

PATENT TO KUTTER NO. 654,651.

One of the five objects enumerated by this inventor as the objects of his improvement is (line 18, page 1): "to provide mechanism to vertically adjust the front end of the shake frame during the operation of the machine".

Fig. 1 shows the wire in a horizontal position, the table rails 11 being trussed by the lower cords 17 and struts 15. The shake frame is pivoted at the rear at points (unnumbered) located on the stationary suction-box frame 13, while the front end of the frame, which carries the breast roll 22, is provided with a vertical adjustment. Figs. 2 and 3 show this adjustment on a larger scale; 12 represents the breast-roll frame to which are bolted the ends of the table rails 14. At each end is a cylindrical transverse bar 48 attached to an adjusting screw 47 (Fig. 3). These transverse bars are seated in transverse grooves 51 formed in the under edge of the breast-roll frame, and the transverse bars have flattened ends 49, which move in slots 44 formed in the upper portion of the shake standards 38. Each of these standards carries a worm 52 and worm gear 45, the worm gear being threaded internally to fit the adjusting screws 47 of the frame 12. A shaft 55 bearing a hand wheel 56 extends from side to side, and from this shaft at each end the worms 52 are driven by miter gearing. The slots 44 are shown to be very shallow, and intended to provide for a small vertical movement of the flattened ends 49 of the transverse bar 48, and through them of the breast-roll end of the shake frame. It is obvious from the drawing that very little, if any, movement was intended above the position which is shown by Figs. 2 and 3, since otherwise the bar 48 would commence to leave the guides 43. A greater but still very limited amount of adjustment below this position seems to be intended. The specifications make no mention of a declining wire, and there is reason to believe that what the patentee had in mind was the adjustment of the breast-roll end from the level to positions below the level. The suction boxes are mounted on a fixed frame, which makes anything more than a very slight elevation of the breast roll above the level impossible. Furthermore, to carry out the idea expressed in line 31, page 2, of adjusting the machine while in operation, had any substantial adjustment been contemplated, it would have been necessary to mount the flow box 37 so that it would participate in the adjustment of the shake frame itself; whereas Fig. 1 shows it to be stationary, and it is so described in the specification (page 1, line 70). The purpose of the

adjustment is distinctly said to be "for the use of pulp of different grades" (line 22, page 2), and the remarks made above with reference to the Barrett and Horne patent apply to this patent also.

PATENT TO KUTTER No. 683,949.

Here the main object of the invention is the construction of a rigid shake frame which will obviate the formation of wrinkles in the making wire. However, it is stated that this frame is to be used in connection with extensible breast-roll supports "whereby the front end of the shake frame may be adjusted in height during the operation of the machine". The shake frame is pivoted and adjusted by mechanism similar to that shown in the earlier Kutter patent No. 654,651, previously described. Fig. 1 shows the wire as absolutely level, and since the position of the breast-roll frame 7 in the support 8 seems to be the highest position possible, the breast roll seems to be intended to be at all times either level or below the level. The fact that the connection 22 to the flow box is shown inclined upward, while the wire is level, would also favor the idea that the adjustment of the breast roll was to be downward. There is nothing in the specifications intending to show that an elevated breast roll was in mind, and there probably was not, as the customary way of running the wire prior to Eibel was either level or uphill, depending on whether the stock was quick or slow.

This patent adds nothing of consequence to the previous Kutter patent.

PATENT TO MOORE AND WHITE No. 684,081.

The object of this invention, as stated at line 14, page 1, is to provide means whereby the shake frame is readily and accurately adjusted and locked in the adjusted position. Fig. 1 shows a shake frame B consisting of table rails B^2, supporting beams B^1 and connecting struts b. The supporting beams B^1 are secured to frames B^3, shown in detail in Fig. 6, these frames being pivoted at a^1. A framework D, shown by Figs. 1 and 2, to extend from side to side at the head of the machine, carries the breast roll C and the ends of the table rails. At this point also a frame G (Fig. 3) extends from side to side, and is adjustably supported by screw studs g, g,

bearing in worm-gear nuts *e*. From the ends of this frame G are suspended straps I, to which are attached the framework D, which forms a part of the shake frame carrying the breast roll. A shaft F, Fig. 2, carrying a handwheel f^1, at the end, is used for driving two worms, *f*, which engage with the worm-gear nuts *e*, so that on turning the handwheel the shake frame is raised or lowered through the medium of the frame G and suspension links I. Fig. 1 shows the wire as absolutely level. The adjusting screws *g* shown in Figs. 3, 4 and 7 extend about their own diameter beyond the worm-gear nuts, showing that a small adjustment is possible. The suction-box section is stationary. As near as one can judge from the illustrations, a total adjustment between the lowest and highest position of breast roll of perhaps a couple of inches was intended. Certainly no substantial declination of wire was provided for.

The patentees in this instance are J. W. Moore and J. A. White, of the paper machine manufacturing concern Moore & White Company. As other paper machine manufacturers, such as Pusey & Jones, through the Savery patent already described, and Black & Clawson through the Kutter patents already described, had provided adjustments for the express purpose of taking care of variations in the quality of the stock, and as nothing is said in these specifications in regard to any new purpose in providing for an adjustable breast roll, it is evident that the purpose of this patent also was to take care of stock variations, that is, to retain the stock on the wire for a slightly longer or shorter period, according as the stock was slow or quick. The remarks made above as to the other patents apply to this also.

Patent to Savery No. 742,239.

The object of this patent is declared to be "to produce an improved paper-making machine of the Fourdrinier type in which the controlling devices for the web or stream of pulp (*i. e.*, the deckles) shall be mounted independently of the shaking section, so as not to move therewith" (lines 33 to 38, page 1). This improvement is used in connection with the machine shown in Savery patent No. 675,072, which has already been explained. Nothing new is shown

in connection with the adjustable breast roll, and as the independent deckle frame support has no bearing on the Eibel invention, there is no need to discuss this patent further.

PATENT TO MOORE AND WHITE NO. 809,832.

The object of this invention is "to improve the construction of the machine for which we have obtained Letters Patent in the United States No. 620,548, dated February 28, 1899, the said invention relating particularly to certain details of the construction of the shake frame". (Page 1, lines 18 to 24.)

In Fig. 1, A represents the stationary suction box frame, A^1 a separate standard for the support of the lower rails d of the shake frame D. This shake frame D is composed of upper rails d^1, ordinarily called table rails, which form a continuation of the stationary table rail a beyond the shake pivot d^2. Separators d^4 connect at intervals the upper and lower rails, while the breast-roll ends of these rails are rigidly bolted together by frame D^1 extending across the machine at the head end. This frame D^1 is adjustably supported, as shown in Figs. 5 and 6, by links b suspended from eccentric bolts a^3 carried by the stationary frame A^2, which frame extends across the head of the machine by the side of the frame D^1. The frame D^1 carries the bearings for the breast roll E, shown by Figs. 1 and 2. The rear ends of the lower shake-frame rails d enter sockets formed in the standards A^1, and are rigidly secured by the bolts a^7 (Fig. 1). Fig. 1 shows the lower shake-frame rails d not only adjustably supported at the end by the suspension links b, shown in detail in Fig. 6, but also by an additional support midway of their length, shown in detail in Figs. 3 and 4. Adjustments having been made at the breast-roll end, links b^1 of the intermediate support cause the bolts a^7 to rise in the slots formed at the top of stationary frame a^8. Set screws a^9 in the clamp block a^6 are brought down until they touch frame A^2; the nuts of the bolts a^7 are tightened, and thus the links b^1 are made to carry a part of the load of the shake frame.

The drawings and explanations furnished by the specifications make it very apparent that a very small adjustment only was in-

tended. The rear ends of the lower shake frame rails d being rigidly secured by sockets and bolts, as explained in line 64 of page 1, no pivoting is possible at this end, and the rails are evidently intended to be flexed when adjustment is made at the breast-roll end in the same manner that they are intended to be flexed when the end of the shake frame is vibrated, as explained in line 80 of page 1. Particular attention is called in line 82 of page 1 to the fact that pivot joints are objectionable and are avoided as far as possible in the construction. That the adjustment is extremely restricted is shown also by the manner in which it is obtained, namely, by eccentric bolts a^3 (Fig. 6) turned by a wrench, the adjustment being limited to the eccentricity of the portion a^4. Assuming that Fig. 6 is drawn to scale, I should say that only a fractional part of an inch was intended as the total adjustment, and line 62, page 2, states that the construction shown in the drawings is sufficient for ordinary purposes. If, at any time, an "extended adjustment" should be required, line 61 states that bolt d^8 (Fig. 6) may also be made eccentric, but that the one bolt a^3 is preferable, and would ordinarily be sufficient. Still another reason for concluding that small adjustments only were contemplated is that the flow box is shown independently mounted, and with no flexible connection for the pulp to flow upon the machine. Likewise, as is the case in the other patents in evidence, the table rails are pivoted in front of the first suction box, and the suction boxes are stationary, so that the breast roll could not receive any upward adjustment of any substantial extent without the wire leaving the suction boxes as it travels in a substantially straight line from breast roll to guide roll.

This patent is only another illustration of a special means of adjustment for the purpose of providing for inequalities in the stock.

This pitch adjustment for drainage purposes would, in fact, depend not only upon the quality of the stock, but also to some extent upon the speed of the machine; but in so far as it depended upon the speed of the machine, it would vary with that speed in exactly the opposite way from that prescribed by Eibel; for in-

creasing the speed of the wire (other things being equal), of course, leaves the stock for a shorter time upon the wire and so gives less opportunity for the stock to drain before the dandy roll is reached. *An increase of speed of the wire, therefore, lessens the need of giving the wire a downhill pitch for drainage purposes;* whereas, under the Eibel invention, in which the purpose of the pitch is to overcome initial relative velocity, *an increase of wire speed calls for an increase of pitch.*

This again well illustrates the fact that the principle and purpose of these breast-roll adjustments of the prior art was wholly different from the principle and purpose of Eibel's "substantial pitch".

British Patent No. 24,669 of 1893, to Craig.

The object of this invention is stated to be "to afford facility for the adjustment of the height of the endless wire cloth upon which the pulp is fed, so as to regulate the flow of pulp upon the wire, and the quality of paper produced whilst the machine is in motion".

Fig. 1, illustrating the side view of the machine, shows very distinctly the wire as running uphill. In this figure *a* represents the stock chest, *b* the screen, *c* an agitator, *d* a flow box connected to *a* by a flexible trough *e; f* is the wire which runs from the breast roll (unlettered over the table rolls *g*, passing over the suction boxes (only one of which is shown) to the guide roll, not shown, and on to the couch roll. The table rolls *g* are carried by the table rails *h*. These rails are trussed by struts *k* and ties *i* and *l*. This skake frame, as it is ordinarily called, is pivoted at the rear to the stationary suction-box frame (unlettered) a few inches in front of the first suction box, while the front end, carrying the breast roll and apparently the flow box *d*, is adjustably supported by the standard *m*, shown on an enlarged scale in Fig. 2 and Fig. 3. The whole weight of the forward end of the shake frame, with breast roll and flow box, is carried by the vertical screws *n*, which the specifications state are capable of turning freely and rising and falling in the standards *m*. I should say, however, that these screws would have to be prevented from turning if the device is to be operative. In the sockets for these screws are pockets for the worm-

gear nuts *o*, which prevent any vertical movement of these gears. Worms *p*, secured to the shaft *q*, work into these gears, and a hand wheel *r* is secured to the end of the shaft, by turning which the shake bar *h* can be set horizontal, or raised or lowered as may be required. It is not clear whether the patentee means raised or lowered from the position shown, or raised or lowered from the horizontal position. Although Fig. 1 shows the breast roll depressed, the cross-section of Fig. 2 shows it to be possible to lower it still further. There is nothing to show positively what is the highest position intended for the screws *n*. The cut indicates that screws *n* can only rise a thread or two before the securing set screw *s* bears upon the threads of *n*, which would be bad construction if more than this was intended. Again, considering the fact that the screws *n* are the sole support for the breast-roll end of the machine, considerable rigidity is required, and it is fair to assume that the screws were intended to remain at all times well within the socket below the worm gear in order to provide the requisite bearing surface. As another indication that no raising of the breast roll was contemplated, I would state that the screen *b*, which is permanently fixed, is not shown to be high enough to permit the wire to be raised above the horizontal. It is absolutely necessary that the screen plates shall be higher than the stock as it flows on to the wire, or else the screens would be inoperative. As in all the other patents which I have explained, the suction boxes are stationary, which fact alone would prevent the wires being raised more than two or three inches at the breast-roll end. This patent adds nothing to those previously discussed.

British Patent No. 3,612 of 1900, to Johnson.

This is the same as United States patent No. 684,081, issued to Moore and White on October 8th, 1901, which has already been explained.

British Patent No. 14,193 of 1895, to Davidson and Kitchen.

The object of this invention is declared to be "to produce a close and perfect sheet of paper, even when changing from a pulp which parts with its water freely to a pulp which does not, or from a thick

to a thin sh eet; and this without stopping the machine" (page 1 lines 25–27). This is a clear statement of the purpose for which the adjustments are provided in all of these patents of the prior art under discussion. This object is declared to be accomplished, as illustrated by Figs. 1 and 2, by carrying the breast roll *b* and the table rolls *c* upon a frame pivoted at its rear end at *j*, and provided at the front end with adjusting screws *h* for raising and lowering the suspension frame. These screws *h* are driven by bevel gearing *j*, *k*, the gear *k* being secured to the shaft *l*, running crosswise of the machine, and operated by the hand wheel *m*. Line 33 states that by varying the height of the breast roll the depth of the stream of pulp flowing on to the gauze, or paper-forming wire, is varied. As in the case of the Craig patent, the side view of Fig. 1 shows an uphill direction of the wire, and no reference is made to the breast roll ever running above level; and the adjusting screws *h* would appear by Fig. 1 to be only capable of still further lowering the breast roll. The suction boxes are stationary.

German Patent No. 128,626, to Seybold — Table Parts of Fourdrinier Machines.

The object of this invention is the production of a wire frame in which the table rails, although freely supported, are capable of adjustment by the simple turning of a hand wheel over the breast roll. Such a construction is declared to be of great advantage in making one instead of many adjustments, and in doing away with a large number of fulcra and bearings, which cause a great deal of friction, and which can never be kept free from water. The invention is illustrated by Fig. 1, representing the side view of a Fourdrinier machine, and Fig. 2 an end view. The table rails are shown at *a* (Fig. 1), which rails are made to form the upper part of trusses having struts *d*, *d* for the support of the table rails, which also serve to carry the guide rolls *h*, *h* for the return wire, and these struts are connected at *e* by truss rods *f* and *g*. The struts *d*, *d* are prolonged at *k*, and from their tops a bracing *n* extends across from side to side of the machine, while braces *m* extend across the bottom from *e* to *c*, these trusses thereby being formed

into a rigid shake frame. Fig. 2 shows the manner of supporting the breast-roll ends of the bands *c*, bolted at their top to adjusting screws which are operated through gearing by the hand-wheel shaft extending across the machine, and which is unlettered in the drawing. Fig. 1 shows the wire as level, and Fig. 2, an end view, shows the adjusting screws at apparently their highest position, but capable of a considerable downward adjustment, which would indicate that the patentee contemplated only an adjustment from level to varying degrees of depression of the breast roll. Nothing is said regarding the purpose of the adjustment, and the purpose is evidently the same as that stated in other similar patents, viz., to compensate for differences in the quality of the stock as regards drainage. Certainly the patent does not make the slightest suggestion of a machine having its breast roll raised substantially above the level, which was then an unknown thing in the art.

GERMAN PATENT NO. 99,603, TO FUELLNER — ADJUSTABLE TABLE PARTS OF FOURDRINIER MACHINES.

This invention concerns a device for Fourdrinier machines whereby it is possible to vertically adjust all parts of the shake frame, so that when the wire is in an inclined position all parts retain their same relation to each other. Fig. 1 shows the manner in which this is accomplished by supporting the breast roll, the save-alls and table rails on suspension frames *a*, which are pivoted at a^1, the breast-roll end being adjustably supported on eccentric *k*, secured to the shaft *i*, which is rotated by worm gearing *l*, l^1, operated from the vertical hand-wheel shaft unlettered in the drawing. The table rails *c* are pivoted at c^1 for vertical adjustment of wire and also for side-shake movement, the pivoting bolt being carried by the stationary suction-box frame *h*, and being located some little distance in front of the first suction box. Fig. 1 shows the wire in a horizontal position. It also shows the breast roll in the highest position possible, as indicated by the position of the eccentrics *k*. Fig. 3 shows the breast roll depressed nearly to its lowest position, as shown by the eccentrics. There is shown also a hand wheel *m* mounted on a horizontal shaft which rises and falls in a slot con-

tained in the eccentric shaft pedestals, and so devised as to lock the suspension frame *a* after having been adjusted to their desired inclination. These illustrations would seem to show unmistakably that the adjustment contemplated was from level to variously upwardly inclined angles.

GERMAN PATENT NO. 149,841, TO STAPF — FOURDRINIER MACHINE WITH TABLE RAILS SUPPORTED BY STRUT FRAME.

This invention relates to the arrangement of a shake frame by which the shake motion is imparted in larger degree than is usual to that part of the frame adjacent the suction boxes, this enabling the felting process to be more thoroughly accomplished and allowing the finer grades of paper to be made more rapidly than with a less effective shake.

Incidentally, there is provided a slight vertical adjustment for the breast-roll end of the machine. This is accomplished by the rotation of the hand wheel on one of the vertical shafts *m* which are screwed into the bearing blocks *w* of the breast roll *v*, so that turning the shafts raises or lowers the bearing blocks, the shafts *m* being connected by a sprocket chain. Fig. 3 indicates that only a trifling adjustment of the breast roll was contemplated, and it is not clear whether it was all below the horizontal, as was the custom in those days, or partly above and partly below. The suction boxes do not share in the adjustment. There is no novelty claimed for the adjustment feature, and its purpose was evidently the same as in the other patents discussed above.

GERMAN PATENT NO. 102,809, TO VOITH.

At the time of this patent the commonly accepted way of adjusting the frame was from the breast-roll end, the shake frame being pivoted to the stationary suction-box frame. As adjustment was made at the breast roll, this necessitated an adjustment in height of the pulp supply as it came on to the wire, and frequently an adjustment also of the shake connection. The object of this Voith invention is the production of a machine whereby the shake frame is pivoted at the breast roll, and the vertical adjustment of the wire brought about by a change in the elevation of the suction-box end.

It is unnecessary to explain in detail the mechanism for making this adjustment.

Fig. 4 plainly shows that the adjustment was to be from the horizontal wire position shown by full lines to an uphill position, as shown by dotted lines, and the specifications make this point very clear also by the following language: "Fig. 4 shows also in diagram how by means of the vertical displacement of the suction box part the wire parts can be led so as to rise from the breast-roll onward." It is also stated that the larger the inclination, the greater is the "couch angle" on the upper couch roll *t*. This can refer only to an uphill inclination, for to increase a downhill inclination would decrease this "couch angle".

The suction boxes remain always in a horizontal plane.

This patent adds nothing to those previously discussed.

German Patent No. 144,508, to Schnitzler — Fourdrinier Machine with Stationary Stuff Chest.

This invention relates entirely to the stuff feed box. Hitherto the feed box had rested upon the wire, participating in the wire oscillation. It is pointed out that the tips of the fibres in the stock flowing over the edge of the box were caught by the wire, dragged along, and would then mostly rest in the direction of the wire. This invention consists in providing an independent support for this box, the overflow edge *c*, *d* resting somewhat above the wire part, but not touching it, the wire touching the fibres, tossing them about and producing a good felting of the web. The patentee points out that, where the wire is required to work on a slope, the stuff feed box must be adjustably supported, as illustrated by Fig. 9. Figs. 1, 2, 3, 4, 5, 6 and 7 represent various shapes of overflow edges of the stuff box, and are not concerned at all with the subject of pitched wire. Fig. 9 is a side view of the machine showing a horizontal wire and having a shake frame pivoted to the stationary suction-box frame, so that the rails are capable of having a vertical adjustment. The wire is shown as adjustably supported, but nothing new is claimed for this, and the purpose of the adjustment is evidently the same as that of the similar adjustments

in the other patents I have discussed. It is evident from the position of the adjusting screw that an adjustment of the breast roll below the level was contemplated, and it is impossible to state whether an upward movement also was in the mind of the inventor; but, if so, it must have been a slight one. The suction boxes remain fixed.

GERMAN PATENT NO. 146,021, TO BRUDERHAUS — WIRE PART OF A PAPER MACHINE SUSPENDED SO AS TO OSCILLATE.

The patentee states that the various forms of paper machines with suspended shake frames all have the common characteristic that they are suspended at two or more places, while in the present invention it is suspended at one point only, whereby easy and natural oscillation is brought about, in connection with as small a number as possible of wearing parts. Fig. 1 is a side view of such a machine, and Figs. 2, 3 and 4 are front views showing slightly varying forms of suspension. Fig. 1 shows the rails *c* pivotally supported on the stationary suction-box frame in a well known manner, the rails being trussed and suspended in a frame *i* at a single hinged point *a* by rope, chain or belt. A slight adjustment is provided for, this adjustment in the forms shown in Figs. 3 and 4 being obtained by tightening up the nuts on the bolts passing through the brackets extending from the stationary parts *d* and *i*, respectively, and the adjustment being obtained in the forms shown in Figs. 1 and 2 by tightening the bolts on the nuts passing through the top of the frame *i* by means of which the shake frame is suspended. Fig. 1 shows the wire as horizontal, while the bolt which supports the shake frame from the top of the frame *i* has the appearance of being in its highest position. As the bolt extends above the top of the nut for a considerable number of threads, the only adjustment contemplated for the breast roll would seem to be downward below the level. Figs. 2 and 3 would indicate the same thing. In any case, the adjustment is obviously very slight.

GERMAN PATENT NO. 83,020, TO ANDRES.

This patentee calls attention to the advantage which resides in being able to incline the wire upwards from the breast roll onward

for the purpose of manufacturing paper with a clean translucency, free from clouds and streaks, of increased toughness and greater tensile strength, and for producing heavier papers and cartons. He states also that a varying vertical position is necessary for the various thicknesses and weights of paper and the various compositions of the stock. Up to the time of this invention he states that it had been necessary to raise or lower more or less each breast-roller stand, as well as each table-rail support.

The object of the invention is said to be to provide for a "convenient, rapid and entirely uniform parallel letting down of the entire table part toward the breast roll". There is no doubt here as to what was in the mind of the inventor as regards the slope of the wire, for he distinctly states it to be a letting down of the breast roll, and the construction which he provides enables this to be done by simply turning the hand wheel at the top of the vertical shaft *e*, shown in the side elevation by Fig. 1 and end elevation by Fig. 4. It seems unnecessary to explain in detail the mechanism by which this slight upward inclination is given to the wire.

This is simply a patent for the specific means of more conveniently securing an upwardly inclined wire, which, as is shown by the other patents I have explained, was thought to be an advantage in the manufacture of certain grades of paper.

Cross Examination by Mr. PAUL.

×-*Q.* 33. Mr. Aldrich, do you hold the same position with the plaintiff that you did when you testified as a witness in this case in September, 1917?

A. I do.

×-*Q.* 34. You have attended with counsel for plaintiff the taking of the various depositions that have been taken by the defendant, have you not?

A. I have.

×-*Q.* 35. You speak of seeing the defendant's machines for a short time on September 15, 1919. There was no limit on the time of examination on the part of the defendant, was there?

A. No.

X-*Q.* 36. You were given every facility for making any examination of the machines that you desired, were you not?

Q. I was.

X-*Q.* 37. Referring to the Carter diagram to which your attention was called by counsel, and particularly to diagram No. 3, if the head, slice opening, point of speed equality and speed used by Mr. Carter in the computation for this diagram are correct, do you find the results to be as stated by him?

A. I figure that the pitch would account for 124 feet increase in velocity and the wire 136.

X-*Q.* 38. When you speak of "the wire" you mean the drag of the wire, do you not?

A. Well, I ordinarily do. The drag, however, implies relative velocity, and sometimes the fibres very suddenly adhere to the wire, and I think there may perhaps be some distinction between drag and adhesion of the fibres at the stage when the stock takes the full speed of the wire. This would be more marked where the pitch is insufficient than where the ideal Eibel pitch is employed.

X-*Q.* 39. I note that on this diagram Mr. Carter gives the velocity due to pitch at 118 feet, while you have 124, and the velocity due to drag of wire at 137 feet, while you have 136. Can you explain how the differences occur?

A. My figures for an average head of five and one-half inches I take from the Exhibit T-8 as being practically midway between the figure for five inches and the figure for six inches, which is 325 feet per minute. The speed at the point of speed equality was figured for a head of ten and one-half inches, which is the head in the flow box plus four and one-half inches, due to pitch of the wire, and this, according to the table, would be 449 feet. The difference between 449 and 325, which should be credited to the pitch, is 124. The difference between 585, the speed of the wire, and 449 feet equals 136, which should be credited to the wire itself.

X-*Q.* 40. The difference seems to be that you have taken the speed at which the stock leaves the slice at about 325 feet per minute, and Mr. Carter has taken it at 330 feet per minute. Is that the difference?

A. That practically constitutes the whole difference. The difference between these figures and Mr. Carter's is practically accounted for by my taking the speed of the stock as it comes on to the wire at 325, whereas he has taken it at 330.

×-*Q.* 41. You would consider that it is entirely possible that at the time Mr. Carter examined these machines they were running with the head slice opening and speed of wire as stated by him on the diagram, would you not?

A. I would not say impossible, but I think it is probable that he underestimated the head somewhat, as according to my recollection he stated he put a rule down some distance away from the slice, and perhaps the bottom of the rule was not on a level with the top of the breast roll, as the apron may have been somewhat higher than the top of the roll. I don't pretend to account for the difference of 13 feet between the speed of the wire with the paper running within three feet of the speed when he observed it. If he attempted to count the revolutions for one minute, I think he would be more apt to be in error than I in counting it two or three minutes. The ratio between paper and wire speed as I found it is about what I have usually found it to be on a news machine.

×-*Q.* 42. The difference between Mr. Carter's figures and your own on the speed of the wire amounts to practically two revolutions of the lower couch roll, does it not?

A. Nearly. But of course a paper machine does not run at the same speed day after day, and it is quite possible that the wire was running slower then than when Mr. Carter examined it and that his figure for the speed of paper would not correspond with mine.

×-*Q.* 43. What I wanted to get at, Mr. Aldrich, is this: The difference between Mr. Carter's figures and yours might be entirely due to a slight difference in speed and amount of head at the time you respectively examined the machines, might it not?

A. As far as the head and wire speed are concerned, that is so. But the speed of wire and speed of paper are ordinarily tied up to a pretty constant ratio, so that if the speed of the wire was greater on the day that Mr. Carter measured it than on the day that I measured it, a higher paper speed would have been expected.

X-*Q.* 44. This difference of speed might be accounted for by some slight inaccuracy in count, might it not?

A. Yes.

X-*Q.* 45. How many times did you count the speed of the lower couch roll?

A. I do not recollect, but I think two or three times.

X-*Q.* 46. Did you get the same count every time?

A. Well, practically the same. I don't recollect what the variation was in any different count.

X-*Q.* 47. Did Mr. Lyman count it also?

A. I am under the impression that he did once or twice, but I don't know whether he did in every case or not.

X-*Q.* 48. Did he always get the same count that you did?

A. I wouldn't say that he did absolutely, but I don't recollect what the variation was.

X-*Q.* 49. Do you consider the differences in operation of machines 1, 3 and 4 between what has been stated by you this morning and what is represented by Mr. Carter's diagram No. 3 as of importance in determining whether the defendant's machines do or do not embody the alleged invention of the Eibel patent?

A. Taking the figures as he found them, I probably should conclude that the machine embodied the Eibel patent just the same.

X-*Q.* 50. Do you put any importance, then, upon the difference between the operation as disclosed by your testimony and the operation of the same machine as disclosed in Mr. Carter's testimony and represented by his diagram No. 3?

A. If the exact ratio between the two factors is of any importance at all in determining, then the variation between my figures and those found by Mr. Carter has importance.

X-*Q.* 51. In other words, you think that the machine as you have described it, as it was operating when you saw it in September, might embody the Eibel alleged invention, while the machine represented as disclosed in Mr. Carter's testimony, and as represented by his diagram No. 3, would not?

A. I think that they both embody the Eibel invention, one to a somewhat greater extent than the other, that's all.

×-*Q.* 52. It's a fact, is it not, that with the machines as disclosed in Mr. Carter's testimony and as represented by his diagram No. 3, the velocity of the stock due to the drag or effect of the wire is greater than the velocity due to pitch?

A. It figures that way, assuming that one-third down the wire is the point of speed equality, which of course is an assumption.

×-*Q.* 53. Did you at the time you were there at the defendant's mill in September also examine the defendant's No. 2 machine?

A. I examined it to some extent; yes. I measured its pitch and its speed, and looked at the formation on the wire.

×-*Q.* 54. Have you examined the Carter diagram No. 4?

A. Yes.

×-*Q.* 55. You are familiar with this diagram No. 4, are you not?

A. Yes.

×-*Q.* 56. And you were familiar with it before you went to International Falls in September, 1919?

A. Yes.

×-*Q.* 57. Does this diagram represent substantially the head, pitch and speed on the No. 2 machine, as you found it?

A. It represents substantially the pitch of the machine, but comes a long way from representing the head on the slice as I saw it.

×-*Q.* 58. And what was the head at that time?

A. The top of the pond was the same distance from the top of the slice as in machine No. 1, but the top of the slice was one-half inch greater distance above the wire than the No. 1 slice, and consequently the head would be about eight and three-eighths inches. I might say that I found the distance between the centers of breast roll and guide roll to be about 28 feet 8 inches instead of 29 feet, but this is a small point.

×-*Q.*59. What difference would this extra head make on the computation given by Mr. Carter?

A. Figuring the slice opening at one and one-half inches instead of one inch, I figure that 68 feet would be credited to the pitch and 136 to the wire, provided the wire was running 585 feet per min-

ute, which was the figure that he gave, and that the point of speed equality was where he indicated on the diagram.

X-*Q*. 60. Now figure that same machine with the speed that you found.

A. I counted this as about a half a revolution less than in the case of No. 1 machine, which would make it about 569 feet.

X-*Q*. 61. Will you figure it at that speed?

A. That would be 120 feet to be credited to the wire, still assuming that the point of speed equality was where the diagram assumed.

X-*Q*. 62. This would leave the velocity due to pitch the same as you had it before, that is, 68 feet, would it not?

A. Yes.

X-*Q*. 63. And the velocity due to head would be how much?

A. Three hundred and eighty-one, for the average velocity of stock.

X-*Q*. 64. Do you consider this No. 2 machine as you saw it operate and as represented in Carter diagram No. 4 as embodying the alleged Eibel invention?

By Mr. LYMAN. The question is objected to because it relates to conditions on that machine which have been changed since the filing of the bill of complaint, and since the question of infringement as regards that machine is not, therefore, material to the issues that are now present before the court.

A. I do not consider it an ideal Eibel installation by any means, and I would consider that the formation of the paper was decidedly inferior to that on machine No. 1. I do consider, however, that a substantial benefit accrues to this machine because of the six-inch pitch, and it would probably be impossible to run the machine at all at the speed it was running without this pitch, because of the valuable impetus which the stock gets in its acceleration early on the wire.

X-*Q*. 65. What do you mean, exactly, by "an ideal Eibel installation"?

A. One in which the chief or preponderating factor of acceleration of the stock is the gravity due to the declining wire, as compared with the wire itself, the pitch of the wire being so correlated

with the speed of the stock that waves and ripples are substantially avoided.

×-*Q*. 66. That you do not find in defendant's machine No. 2, either as you saw it at International Falls or as disclosed by Mr. Carter's diagram No. 4; is that right?

[Same objection as to X-Q. 64 by Mr. Lyman.]

A. That is right. Not an ideal installation; and the looks of the sheet on the wire indicate it.

×-*Q*. 67. And in your judgment the defendant, in operating this machine No. 2 as you saw it at International Falls, or as disclosed in defendant's testimony and represented by Carter diagram No. 4, is not employing the Eibel invention or getting the Eibel result; is that right?

[Same objection by Mr. Lyman.]

A. I consider that it is receiving substantial help from what is revealed in the Eibel specification, running considerably faster than would otherwise be possible, but that the wire is being called upon to do more work of acceleration than it is well adapted to do and at a sacrifice of the quality of the sheet.

×-*Q*. 68. Now, referring to Carter diagram No. 3, and assuming that the machines indicated are operated with the head, slice opening, pitch and speed of wire disclosed by Mr. Carter in his testimony and indicated on the diagram, it is also a fact, is it not, that these machines do not employ what you have called "an ideal Eibel installation"?

A. I would say that with a head of only six inches some increase in the pitch would be advisable, in order to realize the very best results from the Eibel invention. But at the same time there is no question in my mind but what the Eibel invention is employed.

×-*Q*. 69. You have stated in answer to Q. 26 that if figured by Mr. Carter's method the pitch of the wire would accomplish about 194 feet of the speed of the stock while the other factors would contribute about 311 feet. By other factors I suppose you mean head and drag of wire. Will you please divide the 311 feet between head and drag of wire, as applied to this Remington-Martin machine?

A. Taking the large Remington-Martin machine having an 18-

inch pitch and a paper speed of 550, the wire would run about 505, and with a four-inch head and one and three-quarters slice opening the average head on the slice would be three and one-eighth inches, corresponding to 245 feet velocity. The net pitch of the wire, if speed equality is assumed at one-third the distance down the wire, would be six inches, which added to the four-inch pond makes a total drop of 10 inches, corresponding to 439 feet velocity as shown by Exhibit T-8. Four hundred and thirty-nine less 245 equals 194 feet, which would be credited to the pitch. Five hundred and five less 439 equals 66 feet, to be credited to the drag. The total velocity due to head and wire is 311.

X-*Q.* 70. Will you please make similar computations for the small Remington-Martin machine with a 20-inch pitch?

A. In the case of the small Remington-Martin machine with 20-inch pitch, paper speed 575, wire 525, four-inch pond, one and three-quarters inch slice, the average head equals three and one-eighth inches equals 245 speed. Net pitch assuming equality of speed one-third distance down the wire equals six and two-thirds inches. Total head four plus six and two-thirds inches equals $10\frac{2}{3}$ inches total drop, corresponding to 452 feet. Five hundred and twenty-five less 452 equals 73 feet due to wire. Total due to head and wire equals 318.

X-*Q.* 71. Will you please state in tabular form the velocity of the stock as it comes on the wire in defendant's machine No. 1 with the head and slice opening found by you when you examined the machine, also the velocity of the same machine as indicated by Carter's diagram No. 3, the velocity of defendant's machine No. 2 as described by you and indicated by Carter's diagram No. 3, and the corresponding velocity of each of the Remington-Martin machines?

A. Defendant's machine No. 1, as seen by me, with an average head on the slice of seven and one-eighth inches, table T-8, shows the speed to be 370 feet per minute; as given by Carter, it is 330 feet per minute. *Defendant's machine No. 2,* as seen by me, with an average head on the slice of seven and five-eighths inches, speed as shown by Exhibit T-8, is 381 feet per minute; as given by Carter it is 330 feet per minute. *Remington-Martin machines,* with a

four-inch pond and an average head of three and one-eighth inches, the speed of stock as it emerges from the slice would be 245 feet per minute according to Exhibit T-8.

×-*Q.* 72. Do you know at what speed the Remington-Martin machines were run before the pitch was raised?

A. Nothing more than what appears in the testimony.

×-*Q.* 73. Was there any evidence in the Remington-Martin suit showing at what speed they were operated before they were raised?

A. I couldn't tell you.

×-*Q.* 74. As a matter of fact, the testimony in this case shows that those machines ran at practically the same speed before they were raised as they did after?

A. It is my recollection that they did not.

×-*Q.* 75. You testified, when you were on the stand before in this case, as follows:—

> "Practically every paper mill was, prior to and at the time of Eibel's invention, using its utmost endeavors to increase its production and yet make commercial paper. Four hundred and fifty feet per minute was regarded as a very high speed, and up to that time had been seldom, if ever, exceeded, and was generally regarded as about the maximum at which paper could be produced conveniently, for the reason that with a greater initial relative velocity between stock and wire than was represented by this speed the sheet would not smooth out in time to make good paper."

I have quoted the foregoing from your answer to Q. 4. You have learned since you gave this testimony in September, 1917, have you not, that this statement is not correct?

A. I learned of a few cases from the witnesses for the defendant where a slightly higher speed was claimed to have been run, but I do not know how successfully. I have also heard from the witnesses testimony leading me to think that I was just about right in my assertion.

×-*Q.* 76. Did you base that statement that I have quoted upon

your own knowledge of the art or did you copy it from Mr. Little's deposition in the Remington-Martin suit?

A. I based it upon my own knowledge of the art.

×-*Q.* 77. That same statement was made by Mr. Little in the Remington-Martin suit, wasn't it?

A. I think so.

×-*Q.* 78. Have you examined these records produced yesterday by Mr. Glenn showing some of the productions of machines in the mill of the Laurentide Paper Company?

A. I glanced at some of the sheets. I did not study them carefully.

×-*Q.* 79. I notice on the first sheet, January, 1905, machine No. 7, that it gives one column that is headed "Ideal Production" and another "Actual Production". What does this mean, do you know?

A. I don't know, unless it means what it should have been in 24 hours and what it actually produced.

×-*Q.* 80. Do you know whether this speed given is wire speed or paper speed?

A. The paper speed is always the one given; no attention is paid in a paper mill to the speed of the wire.

×-*Q.* 81. These records that were introduced by plaintiff's counsel yesterday show that the statement quoted by me from your former deposition, to the effect that 450 feet was generally regarded as about the maximum speed, was not correct, do they not?

A. The records show that there was one machine which, after having been reduced from 550 feet to something like 475 feet speed, was continued to run at 475 without further reduction, so I presume that a fairly satisfactory sheet was obtained on that one machine.

×-*Q.* 82. Don't these records show that this machine ran at 518 feet right along?

A. They showed that it ran 518 feet for some time, but they decided not to attempt to run it at even as high a speed as that.

×-*Q.* 83. Do these records show that the speed of that machine

was ever reduced from 550 to 475? Are you basing that statement on the testimony of Mr. Glenn?

A. I have not examined the records. I was basing that on the testimony of Mr. Glenn.

[Adjourned to Thursday at 10 A. M.]

BOSTON, MASS., November 7, 1919.

[Met pursuant to adjournment. Counsel present as before.]

×-*Q.* 84. What do you mean by the term "average head" as you have used it in this deposition, and explain how you get that?

A. I mean the distance from the surface of the pond to the middle of the slice opening. The body of the stock as it emerges from the slice is under different amounts of head varying between the distance from the top of the pond to the top of the slice opening and the distance from the top of the pond to the bottom of the slice opening, and so I have struck an average head for the different depths of pond. I arrive at the average head by subtracting one-half the height of the slice opening from the total depth of the pond. That is accurate enough for all practical purposes.

×-*Q.* 85. In giving your testimony in reference to defendant's machine No. 1, you assume that the slice opening was the same as the slice opening on machine No. 3, which you examined when it was not running without knowing that the slice openings were the same?

A. I was not governed entirely by that. I also calculated what the slice opening should be to let on the requisite amount of stock for making paper at that speed, taking account, of course, of the extra stock which was required to make up for the fibres which fall through the wire, and I figured that the opening should be just about one and one-half inches. If I am not mistaken, Mr. Haddock or one of defendant's employees stated that they counted on about one and one-half inches of slice opening.

×-*Q.* 86. Have you the figures that you used in making that computation?

A. I don't think that I saved them.

×-*Q.* 87. Without making the computations, I wish you would

state the method by which you make a computation to obtain the amount of stock that will pass to a machine running at the speed of defendant's No. 1 at the time you examined it.

A. I assume that the stock will be diluted with about 200 pounds of water to one pound of stock. I know from experience that approximately 60 per cent more of stock is employed than what would thus be represented by the amount of paper being made. It is also well known that the stream will be immediately contracted to about two-thirds of the slice opening. Then, knowing the speed which would be obtained from the depth of pond, it is easy to compute the cross-section of the slice opening.

×-*Q.* 88. Was the head you found on defendant's machines a common head to carry on a Fourdrinier machine before the date of the alleged Eibel invention?

A. I would say that it was considerably higher than was common practice to carry on those machines. Some little time after the Eibel patent it was quite a usual thing to move the slice from a point along the wire one and one-half feet or so from the breast roll towards the couch roll to a point over the center of the breast roll. This has made practicable the carrying of higher heads than were considered advisable at the time of Eibel's patent, as by this means the load is taken off the apron and wire and the first three or four table rolls. As far as I know, this change in the design of the machine was entirely unknown at the time of Eibel's patent.

×-*Q.* 89. What was the amount of head usually carried on a news machine prior to the date of the Eibel patent?

A. I would say about six inches, although I would not say that seven had never been employed. It was necessary to carry a reasonably high head in order to get the requisite amount of stock on the wire, and a steady head on the slice.

×-*Q.* 90. You have given some testimony respecting the patents to Moore & White, and I think during the taking of defendant's depositions you examined machines at the Kimberly & Clark Mill that were installed by the Beloit Iron Works at Kimberly, Wisconsin, as testified by Mr. Ross. Did you consider that those machines at the Kimberly & Clark Mill were at the time you examined

them being operated in accordance with the alleged Eibel invention and embodying the principle of the Eibel patent?

By Mr. LYMAN. Objected to as not cross-examination and as immaterial.

Mr. PAUL. I refer of course to the machines that Mr. Ross testified to, parts of which were furnished by Moore & White.

A. My present recollection of the conditions under which the machine was running at that time are not clear enough for me to give an opinion.

×-*Q*. 91. You were asked on direct examination whether, under these tests applied by Mr. Carter to machines in order to determine whether they come within the Eibel patent, the Remington-Martin machines would have been within the Eibel patent. (I call your attention to Q. 26.) You did not directly answer the question. I wish that you would state whether judged by this test the Remington-Martin machines, held by the Court of Appeals in the Second Circuit to infringe the Eibel patent, would have been within that patent.

A. By Carter's test they would not, as the velocity produced by head and drag of the wire amount to more than that produced by gravity due to the pitch of the wire.

×-*Q*. 92. Was there any testimony brought to the attention of the court in the Remington-Martin suit applying such a test as made by Mr. Carter to the Remington-Martin machine?

A. I am wholly unable to recollect any such testimony.

×-*Q*. 93. Have any of the plaintiff's licensees, since you were on the stand before, to your knowledge lessened or done away with the pitch that you testified was being used by them on their paper machines?

By Mr. LYMAN. Objected to as not cross-examination. Counsel is requested to point to previous testimony that he refers to.

Mr. PAUL. I refer to Q. 7 and answer thereto of the witness' former deposition.

A. In the case of the International Paper Company I think there were three or four machines that were withdrawn from the license for a time, but they have I think all of them been reinstated. I

think there is one machine at the Berlin Mills that is not pitched at the present time on account of some change made in their product. These are the only cases that occur to me now.]

[Cross-examination closed.

Deposition closed.

Signature waived.]

NOTARY'S CERTIFICATE.

COMMONWEALTH OF MASSACHUSETTS,

COUNTY OF SUFFOLK.

I, Hector M. Holmes, Notary Public in and for said county and State, hereby certify that the foregoing depositions of John Glenn, Peter Talbot and Elliot F. Aldrich were taken before me on behalf of complainant at the office of Fish, Richardson & Neave, 84 State Street, Boston, beginning Tuesday, November 4, 1919, and continuing on November 5th and November 6th, 1919; that both parties were represented by counsel; that said witnesses before giving their depositions were duly sworn by me; and that I am not related to or of counsel for either of the parties or in any way interested in the result of said suit.

In witness whereof, I have hereunto set my hand and affixed my notarial seal this tenth day of November, 1919.

HECTOR M. HOLMES,
Notary Public.

STIPULATION.

It is hereby stipulated that if Edward A. Edmonds were called as a witness on behalf of plaintiff he would testify in the manner following, and that this stipulation is to be given the same force and effect as if he had been so called and had so testified: —

Int. 1. Please state your name, age, residence and occupation.

Ans. Edward A. Edmonds; fifty-one; manufacturer; Los Angeles, California.

Int. 2. Were you at one time connected with the Rhinelander Paper Company, of Rhinelander, Wisconsin?

Ans. Yes, sir.

Int. 3. When did you enter their employ and when did you leave their employ?

Ans. I believe in May, 1903, I entered their employ; I left July 1, 1907.

Int. 4. What office did you hold with that company while you were there?

Ans. Manager and treasurer.

Int. 5. When did the mill of the company start making paper?

Ans. About the 1st of June, 1904.

Int. 6. What had you been doing previous to that time?

Ans. Acting as superintendent and manager of the Falls Manufacturing Company, Oconto Falls, Wisconsin.

Int. 7. I mean, what did you do while employed by the Rhinelander Paper Company before the mill started in operation?

Ans. I was the manager in charge, and part of the time acted as buffer before the contractors and directors.

Int. 8. In connection with the installation of the Fourdrinier machines?

Ans. Yes.

Int. 9. Who were the contractors for these machines?

Ans. The Beloit Iron Works.

Int. 10. And how many of the Fourdrinier machines did they put in?

Ans. Two.

Int. 11. What were the sizes of these machines?

Ans. The wires were 118 inch and 107 inch in width.

Int. 12. And the 118 inch was the large machine and the 107 the small machine?

Ans. Rather the 118 inch was called the No. 1 machine and the other No. 2 machine.

Int. 13. Were these machines set up under your general supervision?

Ans. Yes, sir.

Int. 14. And were you familiar with the construction of them?

Ans. Yes, sir.

Int. 15. As those machines were set up, were they capable of any vertical adjustment of the breast roll; and, if so, how much?

Ans. They were capable of vertical adjustment, according to the blueprint, of about three and a half inches.

Int. 16. That would be how much above the level?

Ans. Half of that.

Int. 17. One and three-quarters inches above the level, and one and three-quarters inches below the level?

Ans. Yes, sir.

Int. 18. You say that this was the amount of the adjustment possible as shown on the blueprint. Was it also the limit of possible adjustment as the machines were in fact constructed?

Ans. Yes, sir.

Int. 19. Can you produce a blueprint of the No. 1 machine?

Ans. I can.

[Witness produces blueprint, being the blueprint marked "Complainant's Exhibit Blueprint Drawing of No. 1 Rhinelander Machine" in the case of *Eibel Process Co.* v. *Remington-Martin Company et al.*, and reproduced at page 149 of Vol. I of the record in that case.]

Int. 20. Will you explain briefly how this adjustment of the breast roll is provided for, referring to the drawing and using letters wherever necessary?

Ans. The adjustment provides for a raise above or drop below the level of the machine, the distance below and above the level

being the same, the change being made by a worm gear, which I mark "A", this worm gear being in duplicate and being assisted in raising the wire by worm gear which I mark "B". The worm gear is operated by a connecting rod which I mark "C". By this adjustment the wet end of the wire is raised or lowered the amount allowed or provided for by the worm gear.

Int. 21. How was this shaft operated to turn the worm gear?

Ans. I do not know that I ever saw it operated, but there is at the end of the shaft now a square hub indicating that there may have been, when the machine was built, a wheel.

Int. 22. Or it could have been moved by a wrench?

Ans. Yes, sir.

Int. 23. Did the adjustment include the suction boxes, or would the suction boxes remain stationary when the breast roll was adjusted?

Ans. The suction boxes would not move by any change in the adjustment referred to, the frame for the wire of the machine being in two distinct parts, the separation being before the suction boxes are reached.

Int. 24. Will you indicate the point where the shake frame was pivoted to the suction-box frame?

Ans. It is indicated by marking the blueprint "D".

Int. 25. How did the turning of this worm gear A affect the raising of the breast roll?

Ans. The worm gear A is a part of a vertical iron post resting on the sill of the paper machine foundation; by operating the worm gear the breast-roll end of the wire was raised or lowered.

Int. 26. Have you recently made an examination of the machine in question to verify your statement that the total amount of vertical adjustment possible either way from the level is one and three-quarters inches?

Ans. According to the Beloit adjustment; yes, sir.

Int. 27. You have recently examined the machine?

Ans. I have.

Int. 28. Was there any difference, as far as concerns this matter

of the adjustment for the breast roll, between the No. 1 machine and the No. 2 machine?

Ans. No, sir.

Int. 29. That is to say, the adjustment provided with the No. 2 machine was limited to a possible one and three-quarters inches above the level and one and three-quarters inches below the level?

Ans. Yes, sir.

Int. 30. Through what means was the worm gear B operated?

Ans. By means of the rod and bevel gears, which I mark "F", "G", "H", "I", on the back side of the machine, connecting an adjusting shaft about midway of the length of the shake frame with the adjusting shaft and worm gears at the breast-roll end of the wire.

Int. 31. With the suction boxes stationary, how far would it be possible to raise the breast roll above the horizontal position without lifting the wire above the suction boxes so far that the suction boxes would not do their work?

Ans. I do not know.

Int. 32. Was there anything in the position of the apron board which would interfere with the raising of the breast-roll end of these machines as much as an inch and three-quarters?

Ans. Yes, sir; the apron board is beveled at the side nearest the breast roll to conform to the circle of the breast roll and is separated from the breast roll not more than three-quarters of an inch; any raising of the breast roll above that interval would mean that the board would ride on the wire running around the breast roll.

Int. 33. How would that affect the wire?

Ans. It would wear out very quickly.

Int. 34. Was there anything in connection with the position of the shake rod which would interfere with the raising of the breast-roll end of the machine?

Ans. When the wire is in operation, that is, and on the level, the shake rod at the back side of the machine is on a level with its connection to the wire, so as to provide for perfect lateral shake. It is necessary in order to get that perfect shake to keep the shake rod level with its connection to the wire, and a raise of five or six

inches in the wire would destroy a great deal of the shake. Furthermore, the raise would make the shake rod too short. In its original position the shaking device could not be operated successfully with a raise in wire of more than an inch or two.

Defendant hereby waives the right reserved by it in a previous stipulation to call John E. Alpine as a witness in open court and other witnesses in corroboration of the testimony of said Alpine, and gives notice to plaintiff that it will not rely upon any testimony heretofore taken by it, the purpose of which was to show that said Alpine was the first inventor of the subject-matter of the patent in suit.

FISH, RICHARDSON & NEAVE,
Solicitors for Plaintiff.

A. C. PAUL,
Solicitor for Defendant.

STIPULATION.

The court having granted plaintiff's motion to reopen for the purpose of taking testimony as to the so-called "Committee of Paper Manufacturers Organized to Invalidate Alleged Patent of Eibel Process Company" and counsel for defendant having duly excepted to the ruling of the court, which exceptions are hereby preserved, it is hereby stipulated and agreed by and between counsel that if the witness O. L. E. Webber, heretofore called on behalf of plaintiff under subpoena, were recalled and asked the same questions heretofore asked him, which questions he declined to answer under advice of counsel, he would answer said questions in the manner following: —

Answer to *Q.* 4. Yes.

Answer to *Q.* 5. Yes.

Answer to *Q.* 6. Yes.

Answer to *Q.* 7. The committee solicited money from various paper mill owners and some contributions were made by the companies with which the members of the committee were associated.

Some of the mill owners not represented on the committee, who were solicited for funds, made contributions and some did not.

Answer to *Q.* 8. The committee has not engaged any of the counsel who are conducting the case for the defense. In the circular letter of November 14th, 1917, sent out by Mr. A. J. Dewey, as secretary of the company, it is stated that: "The Committee has retained as chief counsel Mr. Livingston Gifford, of New York City, a patent lawyer of national reputation, and this arrangement is entirely agreeable to Mr. Paul." As a matter of fact, however, Mr. Gifford was retained, and his retainer fee was paid, by the defendant, the M. & O. Power Company. No retainer fee was ever paid him by the committee. The committee has paid bills of counsel rendered since December 5, 1917, although I am advised that part of the bills incurred since last-named date have been paid directly by the defendant, the M. & O. Power Company. The committee has not reimbursed the defendant for any sums paid by it on such litigation, either before or after the forming of the committee.

Answer to *Q.* 9. The names of the committee are set forth in the circular letter specified in question 11. The companies that have contributed to the committee are as follows: Northwest Paper Company, Consolidated Paper Company, Marathon Paper Company, Donaconna Paper Company, Crown Willamette Paper Company, J. R. Booth, Tomahawk Pulp & Paper Company, Wells Paper & Pulp Company, Hennepin Paper Company, Grandfather Falls Company, Lake Superior Paper Company, Watab Pulp & Paper Company, Minnesota & Ontario Paper Company. Of the total amount contributed by the committee, sixty-two per cent (62%) has been furnished by defendant.

Answer to *Q.* 10. The committee has not assumed the conduct of the defense in this case in any particular whatever. It has had no meetings except the original meeting and has not even made any suggestions respecting the defense of the suit.

Answer to *Q.* 11. Yes.

Answer to *Q.* 12. Only two letters have ever been sent out, the first one dated November 14, 1917, a copy of which has been pro-

duced by counsel, and a letter dated August 27, 1919, a copy of which I submit.

Answer to *Q.* 13. I have no record of the exact date, but it was shortly prior to November 14th, 1917. I am advised by Mr. Paul that the meeting referred to in the letter of November 14th, 1917, which is the only meeting that was ever held, was on November 8th, 1917.

Answer to *Q.* 14. I heard statement made by counsel to this effect on September 13th, 1919, when I was before Mr. Ford for examination as hereinbefore stated. This was the first information that I had respecting such change in the pitch of defendant's machine.

Answer to *Q.* 15. No.

Answer to *Q.* 16. Either Mr. E. W. Backus, or some other officer or employee of the defendant, M. & O. Power Company.

This stipulation is to have the same force and effect as if said Webber had been recalled to the stand and had answered said questions in the foregoing manner, subject to the objections heretofore made by defendant's counsel, which objections are herein repeated both as to said questions and the answers thereto.

Counsel for plaintiff offers in evidence the circular letter heretofore marked for identification as "Exhibit X", and identified by the witness Webber in answer to Q. 11, as "Plaintiff's Exhibit Circular Letter of Committee, November 14, 1917".

Counsel for defendant objects to said exhibit on the ground that it is irrelevant and immaterial.

Counsel for plaintiff offers in evidence the circular letter produced by the witness Webber in connection with his answer to Q. 12, the same being dated August 27, 1919, and the same is marked "Plaintiff's Exhibit Letter of Committee, August 27, 1919".

Counsel for defendant objects to said exhibit on the ground that it is irrelevant and immaterial.

FISH, RICHARDSON & NEAVE,
Counsel for Plaintiff.

A. C. PAUL,
Counsel for Defendant.

Dated December 10, 1919.

STIPULATION.

It is hereby stipulated between counsel that if Elliott F. Aldrich, a witness called on behalf of plaintiff, were recalled he would testify that he had inadvertently omitted in his answer to X-Q. 93 of his deposition in rebuttal mention of two machines of the International Paper Company located at the Glen Mill of that company at Berlin, New Hampshire, in which machines the use of a pitched wire was discontinued in 1918, and so far as known to him has not been reinstalled; that he received notice that the pitch had been discontinued from the No. 5 machine in that mill (of which the wire width is 103 inches) by letter dated July 31, 1918, and that he received notice that the pitched wire had been discontinued on the No. 2 machine in said mill (of which the wire width is 122 inches) by letter dated September 5, 1918, and that he had never seen said machines and had no information regarding the change or the reason for it, and had completely forgotten the matter until, after concluding his deposition, he investigated his records at Mr. Paul's request and discovered these facts. This stipulation is to have the same force and effect as if said Aldrich had been recalled and had given this testimony.

FISH, RICHARDSON & NEAVE,
Solicitors for Plaintiff.

A. C. PAUL,
Solicitor for Defendant.

District Court of the United States, District of Maine.

In Equity.

No. 769.

EIBEL PROCESS COMPANY, Plaintiff,

vs.

MINNESOTA AND ONTARIO PAPER COMPANY (Formerly Minnesota and Ontario Power Company), Defendant.

Stipulation as to Time for Filing Answer and Affidavits and Hearing on Preliminary Injunction.

(Filed January 31, 1917.)

It is hereby stipulated by and between counsel for the parties to the above entitled suit that defendant's time for answering the bill of complaint herein, and filing affidavits in opposition to the motion for preliminary injunction, be and the same hereby is extended to and including February 19th 1917, and that plaintiff's time for serving reply affidavits be extended to February 26th 1917, and the date of hearing, of the motion for preliminary injunction be extended to March 7th 1917.

FISH, RICHARDSON & NEAVE,
Solicitors for Plaintiff.
VERRILL, HALE, BOOTH & IVES,
Solicitors for Defendant.

Stipulation as to Time for Filing Answer and Affidavits and Hearing on Preliminary Injunction.

(Filed February 27, 1917.)

It is hereby stipulated by and between counsel for the parties to the above entitled suit that defendant's time for answering the bill of complaint herein, and filing affidavits in opposition to the motion for preliminary injunction, be and the same hereby is extended to and including February 26th 1917, and that plaintiff's time for serving reply affidavits be extended to March 5th 1917, and the date of hearing of the motion for preliminary injunction be extended to March 14th 1917.

FISH, RICHARDSON & NEAVE,
Solicitors for Plaintiff.
AMASA C. PAUL,
VERRILL, HALE, BOOTH & IVES,
Solicitors for Defendant.

Stipulation as to Defendant's Time for Taking Depositions.

(Filed May 26, 1917.)

It is hereby stipulated and agreed by and between counsel for the respective parties in the above entitled cause that the defendant's time for taking depositions be extended to and including Saturday, June 2nd 1917.

FISH, RICHARDSON & NEAVE,
Counsel for Plaintiff.
MAURICE M. MOORE,
Counsel for Defendant.

Boston, Mass., May 15, 1917.

Approved.
CLARENCE HALE,
District Judge.

Stipulation as to Taking Testimony in Deposition Form, as to Dates When Evidence is to be Finished, and as to Right to Call Witnesses.

(Filed September 20, 1917.)

It is hereby stipulated by and between counsel for the respective parties that the testimony in the above-entitled case may be taken in deposition form, the prima facie evidence for the plaintiff to be finished on or before September 20, 1917, defendant's evidence to be finished on or before December 1, 1917, plaintiff's rebuttal evidence to be finished on or before December 31, 1917, and the case to be heard at the first date convenient to the Court thereafter; defendant reserving, however, the right to call John E. Alpine as a witness in open court and other witnesses in corroboration of the testimony of said Alpine, and the plaintiff reserving the right in such case to call witnesses in open court in rebuttal of the testimony so produced by defendant.

FISH, RICHARDSON & NEAVE,
Counsel for Plaintiff.
A. C. PAUL,
Counsel for Defendant.

So Ordered.
C. H.
United States District Judge.

Stipulation as to Testimony of Louis G. Smith.

(Filed September 13, 1920.)

It is hereby stipulated by and between counsel for the respective parties to the above entitled cause that if Louis C. Smith were called

1—add.

as a witness, he would testify; that he is a member of the firm of Heard, Smith and Tennant, attorneys and counsellors at law;

That this firm is a successor to the firm of Crosby and Gregory;

That he was first employed by the firm of Crosby and Gregory on or about the tenth day of June, 1900, and remained with said firm until it was succeeded by the present firm of Heard, Smith and Tennant.

That it was the practice of the firm of Crosby and Gregory in preparing applications for patents to place in each file a draftsman's card prepared at the time bearing memoranda showing from what the Patent Office drawings were made, whether made from a machine, model, blueprint, sketch, et cetera.

That he personally prepared the application upon which was issued the Barrett and Horne patent, No. 691,333; that he has examined and has produced, for the inspection of counsel, the Crosby and Gregory file of said application; and that in said application file is such a memorandum card reading as follows:

1—240.

"Draughting Room.

Inventor, J. H. Horne.
Address, ——.
Invention, Machine for Making Paper.
Received, June 1, 1901.
Pencilled by Allen, 4—1¾.
Time, Greenleaf, 1.
Inked by Lunsford, ½—4—3¼.
Time, 2½.
Lettered by Lunsford.
Total Time, 17 hours.
Blue printed, ——.
Drawn from Blue Prints.
Returned ——.
2 Dys.

Crosby & Gregory, 34 School Street, Boston, Mass."

That these entries were made under his supervision in the regular course of business and indicate that the blueprints from which the drawings were made were received by him and turned over to his draftsman on June 1, 1901;

That the names Allen, Greenleaf and Lunsford are the names of draftsmen in the employ of Crosby and Gregory at that time;

That the drafting room Number 1—240 is the same number appearing upon the Crosby and Gregory office file for said application for said patent (No. 691,333); and is the record relating to the drawings for said applicaiton although the name of J. H. Horne was

entered by the draftsmen on the drafting room card instead of the names of the joint inventors who signed the application.

HARRISON F. LYMAN,
Counsel for Plaintiff.
MAURICE M. MOORE,
Counsel for Defendant.

Boston, Mass., March 21, 1919.

Stipulation as to Change of Name of Defendant and as to Testimony of Robert W. Haddock.

(Filed September 13, 1920.)

It is hereby stipulated by and between the parties to the above entitled cause as follows:

1st. That the name of the Defendant has been changed since the beginning of this suit from Minnesota & Ontario Power Company to Minnesota & Ontario Paper Company, by which name Defendant is to be designated in all further proceedings in this case, and the Clerk of this Court is requested to make this change in the records of his office.

2nd. That if Robert W. Haddock, a witness heretofore called on behalf of Plaintiff, were recalled he would testify that Defendant's No. 2 machine referred to in his deposition, which it appears from the testimony of Defendant's witness John A. Devine was lowered to substantially a pitch of six inches on or about April 8, 1917, was thereafter raised to its original pitch of substantially thirteen and one half inches on or about the First of July 1917 and was lowered a second time to a pitch of substantially six inches on August 5th, 1917, and has since said last named date remained at said lower pitch.

FISH, RICHARDSON & NEAVE,
Attorneys for Plaintiff.
A. C. PAUL,
Attorney for Defendant.

Boston, Mass., September 10, 1920.

Opinion of Court.

(Filed September 30, 1920.)

HALE, *District Judge:*

This is a suit in equity to enjoin the infringement of United States letters patent to William Eibel, No. 845,222, dated February 26th, 1907, for an improvement in Fourdrinier paper-making machines. The patent seeks to construct and arrange such machines so that they may be run at a higher speed and produce a more uniform sheet of paper. For many years the Fourdrinier machine

has been the best known and most widely used paper-making machine. In describing it, I follow substantially the plaintiff's details. It consists, primarily, of an endless wire-cloth sieve, or "wire," passed over a series of rolls at a constant speed. At the "breast-roll" end,—or wet end,—of this wire there is discharged upon it from the "flow-box," or "pond,," a constant stream of paper-making stock, consisting generally of fibres of wood pulp, mixed with from 135 to 200 times their weight of water, and having the appearance of diluted milk. This sieve is woven with 60 or 70 meshes to the inch, and may be 75 feet long and 100 inches or more wide. As it travels forward, the fibres are deposited upon the wire, as the water drains out, the wire being given a sidewise thrust or "shake" to insure their proper felting and interlocking. The stock is carried along, on the wire, draining off its water as it goes, until the "couch-rolls" at the further end of the wire are reached. The stock is pressed between the "couch-rolls," and then, in the form of a uniformly distributed wet pulp, is strong enough to hold together, and be carried through a series of pressing and drying rolls and calendars, which constitute the "dry-end" of the machine. In order to aid in the extraction of the water from the pulp, there is placed, somewhere about 20 feet from the "breast-roll," a series of "suction boxes" beneath and in contact with the under surface of the wire; a partial vacuum is maintained within these boxes so that the greater part of the water remaining in the paper stock is sucked out into the boxes, and very little free water remains in the wet web of paper after it has passed beyond this point.

There are many details of construction to which attention is called; the "flow-box" is the box in which the stock is stored up and from which it is discharged upon the moving wires, through the "slice," namely the horizontal gate extending across the wire, by raising which the stock is discharged from the "flow-box" upon the wire, in a stream having the width of the desired sheet of paper, and having a thickness dependant upon the height of the "slice" opening. The "deckle-straps" are rubber bands, resting upon the wire at each side of the stream of pulp; they travel with the wire, so as to form lateral walls, to confine the stream of stock until it has reached a condition of such dryness that it no longer tends to flow. The "table-rolls" are a series of parallel, horizontal rollers between the "breast-roll" and the "couch-roll," upon which the active portion of the wire is supported so as to present a plane surface. The "dandy-roll" is a roller, faced with the wire cloth, placed above the wire at a point beyond the first suction box and in contact with the upper surface of the paper; it imparts to the upper surface of the paper a texture similar to that which the lower surface receives from its contact with the wire. This "dandy-roll" may also carry the design which impresses the water-mark on the sheet, in case a water mark is desired. The last roller for supporting the wire is larger than the others and is called a "guide-roll," since it is equipped with a device for automatically varying the position of its axis so as to guide the wire and keep it running straight. After the wire passes over the "guide-roll" it drops at an

angle below horizontal to the "couch-roll." Fourdrinier machines are very expensive; and so, for purpose of economy, they are operated day and night; and it is the constant endeavor of all paper manufacturers to run these machines at the utmost possible speed consistent with the production of good paper.

Prior to Eibel,—as the proofs show—450 feet of paper per minute was the substantial maximum at which good paper could be made. At speeds exceeding this limit, great commotion was caused in the stock on the wire; so that the paper formed was uneven, or "wild"; it had waves, ripples and wrinkles in it, during the critical period while the paper was forming, thus preventing an even formation. If higher speed was attempted the sheet would sometimes break, stopping the machine.

The plaintiff says that Eibel made the discovery that the reason for this commotion of the stock, when high speeds were given to the wire, was the excessive difference of speed between the wire and the stock; and that such commotion could be avoided if the stock could be speeded up to equal the wire speed, at the point where active paper formation begins.

Eibel observed—so plaintiff alleges—that so long as the actual difference between stock speed and wire speed did not exceed, say, 100 feet per minute, there was no great trouble, because the "drag" or friction of the wire was sufficient to accelerate the stock to such an extent that speed equality and the consequent quiesence of stock was accomplished before the stock lost its fluid character; he saw the reason why "wild" paper was produced at high speed to be that there was too great a difference between stock speed and wire speed to be overcome by "drag," and that the under part of the liquid was dragged along faster than the upper part, thus causing waves and ripples; in order to meet these conditions, Eibel gave the wire "a sharp, downward pitch from the 'breast-roll' to the "guide-roll;' and thus called in the aid of gravitation to speed up the stock on the wire, and to bring it up to speed equality with the wire," his effort being to use gravity, in correlation with the other elements then in use, with the purpose of making the stock catch up with the speed of the wire. The plaintiff contends that the above is substantially Eibel's inventive thought. Translating that thought into a machine, he took the old Fourdrinier machine, and raised the "breast-roll" end to a substantial elevation above the level. As a process, plaintiff says, that Eibel's invention consists in giving a rapid flow of stock under the influence of gravity, due to a substantial wire pitch, and correlating this pitch with the speed of the wire in such a way that the initial difference of velocity between stock and wire is overcome under the influence of gravity, so that the waves and ripples, which would otherwise be present at the point of paper formation, are done away with. And plaintiff urges that Eibel had in mind the fact that small elevations of the wire had, up to that time, been used; but that these pitches were mainly for drainage requirements; and that no one had conceived the idea of applying a substantial elevation of the "breast-roll" end of the wire to the purpose to which he applied it.

In his specification Eibel calls attention to the prior art as follows:

"The Fourdrinier wire has usually been arranged to move in a horizontal plane, although I am aware that means have been provided for adjusting the breast-roll end of the wire to different elevations, usually below the level, to provide for running with different grades of stock—as, for instance, with quick stock and slow stock; but so far as I am aware the making-wire has always had to perform the work of drawing along the stock, and as the wire moved much faster than the stock, the stock waved or rippled badly near the breast-roll end of the wire, which gradually diminished until an equilibrium was established and a smooth, even, and glassy surface presented, and not until the waving or rippling ceased did the fibres lay down uniformly and produce a well-formed sheet of paper. The machine has been run necessarily at a slow rate of speed to give ample time for the water to escape and for the fibres to lay down so as to make a uniform sheet, and in case the time was insufficient the breast roll end of the wire has been lowered still farther until the desired result was accomplished. In accordance with my invention I operate entirely above the level to cause the stock to travel by gravity at a velocity approximately equal to the speed of the making-wire, which I believe to be a new principle of operation."

He thus points out with some detail what his invention is:

"My invention is embodied, essentially, in the first part or element of the machine having the Fourdrinier wire or paper-making wire, and consists in causing the stock to travel by gravity in the direction of movement of the making-wire and approximately as fast as the making-wire moves, thereby resulting in a 'gravity-feed' for the machine. The stock may be, and preferably is, caused to travel more rapidly than the normal or usual speed of the making-wire for a certain grade of stock, and means are provided for increasing the speed of the machine so as to cause the making wire to move at a higher rate of speed than usual, being substantially equal to the speed of the rapidly-moving stock. To accomplish this result in a simple manner, the breast-roll end of the paper-making wire is maintained at a substantial elevation above the level, thereby providing a continuous downwardly-moving paper-making wire, and the declination thus given to the wire is such that the stock is caused to travel by gravity in the direction of the movement of the wire and substantially as fast as the wire moves. The declination of the paper-making wire may be adjustable or the speed of the wire may be variable, or both the declination and speed of the wire may be adjustable, in order that the velocity produced by gravity in the stock on the declining wire will approximately equal the speed of the wire. By this arrangement the speed of the machine may be increased to such an extent as to bring the speed of the making-wire up to the maximum velocity of the rapidly-moving stock and a strong, even, and well-formed sheet produced which is more uniform than usual."

* * * * * * *

"The elevation above the level at which the breast-roll end of the making-wire is maintained will vary according to the grade of stock; but in any event it will be substantial, so as to cause the stock to move rapidly by gravity." * * * For the purpose of increasing the speed of the machine to the maximum I maintain the breast-roll end of the making-wire at a high elevation above the level, so that the stock travels by gravity much faster than the making-wire ordinarily runs for a certain grade of stock, and I then increase the speed of the machine to such extent as to bring the rate of speed of the paper-making wire up to the speed of the rapidly-moving stock, and as a result the capacity of the machine is largely increased.

I find in practice that by providing a gravity-feed operating substantially as herein described, the stock runs smoothly and evenly without waving or rippling, and the fibres are thereby permitted to settle with great uniformity, as regards their distribution over the wire, so that the paper in addition to being well formed is very uniform. Furthermore, as the stock is moving with the paper-making wire instead of being moved by the wire, or essentially by the wire, the formation of the paper will begin at the start and will continue to the end of the travel of the stock with the wire. Furthermore, by making the sheet of paper uniform over all less sulphite or strengthening material is required. Furthermore, as the stock carries less water when arriving at the suction-boxes the amount of suction ordinarily required may be reduced, thereby reducing the friction due to the making-wire passing over the suction-boxes, and hence increasing the life of the wire." * * *

The claims of Eibel's patent now at issue in this suit are claims 1, 2, 3, 7, 8, and 12, as follows:

"1. A Fourdrinier machine having the breast-roll end of the paper-making wire maintained at a substantial elevation above the level, whereby the stock is caused to travel by gravity, rapidly, in the direction of the movement of the wire, and at a speed approximately equal to the speed of the wire, substantially as described.

2 A Fourdrinier machine having the breast-roll end of the paper-making wire maintained at a high elevation, whereby the stock is caused to travel by gravity faster than the normal speed of the wire for a certain grade of stock, and having means for increasing the speed of the machine to cause the wire to travel at substantially the same rate of speed as the rapidly-moving stock, substantially as described.

3. A Fourdrinier machine having the paper-making wire declined from the breast-roll to the guide-roll, the breast-roll end of the wire being maintained at a substantial elevation above the level, whereby the stock is caused to travel by gravity, rapidly, in the direction of movement of the wire and at a speed approximately equal to the speed of the wire, substantially as described.

* * * * * * *

7. A Fourdrinier machine having the paper-making wire declined from the breast-roll to the guide-roll, and the suction-boxes supported at a corresponding declination, substantially as described.

8. A fourdrinier machine having the paper-making wire declined from the breast-roll to the guide-roll, and the several suction-boxes arranged at different elevations, substantially as described.

* * * * * * *

12. In a Fourdrinier machine, a downwardly-moving paper-making wire, the declination and speed of which are so regulated that the velocity of the stock down the declining wire, caused by gravity, is so related to the velocity of the wire in the same direction that waves and ripples on the stock are substantially avoided and the fibres deposited with substantial uniformity on the wire substantially as described."

The defenses are: First; invalidity of the patent by reason of anticipation in the prior art; and by reason of indefiniteness in some of the claims. Second; non-infringement.

The patent has been before the Court of Appeals in the Second Circuit. Eibel Process Co. v. Remington-Martin & Co., et al. 234 Fed. 624. The Court held the patent to be valid and infringed as to claims 1, 2 and 3.

1. The defendant contends that there has been anticipation in the prior patented arts; and also that there has been actual prior use of the Eibel invention. It introduces testimony tending to show that there were certain patents disclosing a substantial pitch, both for drainage purposes and for the same purpose to which Eibel applied the "gravity-feed" system.

In the Remington-Martin case, 234 Fed. 624, 631, the Court examined certain prior patents introduced by the defendant as proving anticipation. As to these patents, the court said:

"Six United States and ten foreign patents were received in evidence. All show means for effecting a slight adjustment of the breast-roll, and none amounts to more than an illustration of the drainage adjustment which Eibel fully understood and referred to in his patent. The patents demonstrate that skilled men prior to Eibel did not appreciate the possibility of raising the breast-roll end of the machine more than an inch or two, and that none of them had had the faintest conception of the principle of operation which characterizes the Eibel invention."

The same patents are before me in this case. Upon examination of them, I find no reason to differ from the conclusion of the Court of Appeals in the Second Circuit. The defendant now refers to the Barrett & Horne patent, No. 691,333. This is said to be an improvement on an earlier Barrett & Horne patent No. 634,228, which was in evidence in the Remington-Martin case. The later patent refers to the former patent and says:

"It is the object of our present invention to modify this type of machine by placing the adjusting device for the shake-frame above the same and out of reach of any moisture or water that might flow over on to the floor."

The purpose of the adjustment appears to be the same as in the earlier patent, namely: "to adapt the machine for pulp of different kinds or grades." In the earlier patent the method of so adapting the machine for pulp of different kinds is explained as follows:

"In certain kinds of pulp, notably the wood-pulp which is now largely used in making paper, the water drains away very rapidly, so that the pulp may become nearly dry before it leaves the shake-frame, and thus not be properly laid when it reaches the rollers. This tendency may be obviated to a considerable extent by downwardly inclining the shake-frame toward the rollers, so that the water tends to travel along with the pulp and will not, therefore, drain out through the wire so rapidly. It is further desirable that the amount of inclination or slope should be variable, so as to adapt the machine for pulp of different kinds or grades."

It appears, then, that the reason for the slight pitch of the wire which these patents provide is to prevent the difficulty arising when certain kinds of pulp are used in which the water drains away rapidly. In the later patent, as in the earlier one, I find no claim of any novelty in respect to an effort toward adjustment, for the purpose which Eibel disclosed. The patents tend, rather, to illustrate adjustments well known to the whole art before Eibel, and referred to at lines 82 et seq. of his specification. They do not disclose that these adjustments are for the Eibel purpose of reducing the relative speed of stock and wire, giving the stock a gravity acceleration, and thus doing away with the waves, ripples and wrinkles caused by the difference of speed between the stock and the wire. There is no indication that the patents seek to increase the speed of production. I think this may also be said of the alleged prior use at Lisbon Falls. This relates to two machines of the Pejepscot Paper Company. There was a pitch of two inches used on these machines before the Eibel patent. This use was clearly for "carrying the water nearer to the suction box." Evidence was offered by the defendant tending to show a pitch of four inches or more; and that such pitch was used for purposes which might be held to be within the Eibel patent. After examining this testimony I find it insufficient to establish either the date or other substantial facts with reference to this alleged prior use. This is especially so in view of the well-known rule invoked by Judge Putnam of the Court of Appeals in this Circuit, in the Emerson and Norris case, 202 Fed. 747, 750. After a careful study of all the evidence offered by the defendant to prove anticipation, either in patents or by a prior use, I am led to the conclusion that no one of the prior inventors, or alleged users, disclose any of the inventive purpose of Eibel. No one shows any knowledge of any relation between the pitch of the wire and speed, or of the use of gravity

to aid the other elements in well known use before Eibel. From a study of the proofs now before me, I see no reason to differ with the Court of Appeals in the Second Circuit in its conclusion that no one before Eibel had any knowledge of his theory; and that the slight pitches of the prior art were used in most instances to bring stock to the "dandy-roll' more quickly than when the horizontal wire was used.

It is true, of course, that a slight pitch of two inches causes some slight increase in the speed of the stock on the wire. Eibel's claims are limited to a substantial pitch; for it is only by such assistance of gravity that Eibel could acquire the speed which he sought. He appears to have been invoking this aid of gravity, in correlation with the conditions which he already found in the use of Fourdrinier machines; namely, "drag" and "head."

It is evident that the trivial pitches in the prior art were used for a wholly different purpose from that of Eibel. Those who used them are not shown by the proofs to have appreciated and observed the operative system which Eibel invoked. Their use was so inconsiderable in extent that any possible effect was apparently too small to be capable of observation. They would give no help to anyone seeking to obtain further speed in the use of the Fourdrinier paper machine; they would give no hint in regard to any practical purpose of conforming the speed of the stock to the speed of the wire. If, in using the pitch for drainage, some slight advantage was obtained in reference to equalizing the speed of the stock to that of the wire, it was clearly an unexpected and unappreciated result. And it is clear that such result is not sufficient to constitute infringement. Tilghman v. Proctor, 102 U. S., 707, 711.

If there be any doubt as to patentable novelty, this doubt may well be resolved in favor of the patent, by its commercial utility. The proofs show that when the Eibel process was first put in use at Rhinelander, the high pitch which Eibel had brought to the art was looked upon as revolutionary. Up to that time the usual speed of Fourdrinier machines had seldom exceeded 450 feet per minute, although the whole art was seeking greater speed. It was said that the "fastest machines in the world" had arrived at a speed of about 500 feet per minute; but to attempt to get an increase of speed beyond this limit had met with failure; and where high speed had been tried it had been abandoned, because it was found that at higher speed there was great commotion on the wire, resulting in "wild" paper. After the Eibel idea got fairly before the public, it was at once adopted by substantially the whole art. As a result of using the high pitch, taught by Eibel, the proofs show that the paper machines have been able to increase their speed from 25 to 30 per cent., or even more; so that it is now the common practice to make newspaper at a speed of 600 feet, or even 680 feet, per minute; and that it is not now known what the limit may be to speed. In Loom Company v. Higgins, 105 U. S. 580, 591, the Supreme Court found a new and useful result where a loom was made to produce 50 yards a day when it had never produced more than 40. The teaching of that case has now become common learning in cours

accustomed to pass upon patents. Success makes the result seem simple; and it is quite usual to have witnesses say that the thing was easy, and did not involve any use of the inventive faculty. In the case before me, it does not appear to have occurred, either to the prior patentees, or to machine workers, before Eibel, that high speeds could be attained by using a high pitch. When the result was attained, however, the public was glad to profit by it. And the proofs show that the result of the Eibel invention has been a most extended commercial use of his process. This commercial utility and success may properly be invoked in favor of the patent.

The defendant contends that claims 1, 2 and 3 are void for indefiniteness.

In claim 1, Eibel has the breast-roll end of the paper-making wire in the machine "maintained at a substantial elevation above the level, whereby the stock is caused to travel by gravity, rapidly, in the direction of the movement of the wire." similar language is used in claims 2 and 3. The defendant says that the use of such words as "substantial elevation" and "rapidly" are so indefinite as to render the claims void. Eibel's inventive thought had for its object a process whereby the machine might be run at a much higher speed than heretofore. Eibel found the Fourdrinier machine with the wire running horizontally. He took the elements which were already in use and added to them a process whereby the breast-roll end of the wire is maintained at a sufficient elevation above the level to make the stock travel, by gravity, at great speed. It is apparent from the testimony of the experts that it was impossible to know in advance the exact speed which any particular pitch would cause; this lack of knowledge beforehand was due to the variations in the stock used, and to the varied use of the different elements then employed in operation; sometimes the depth of the "pond" back of the slices would be greater than at others. The "drag" or "friction" of the wire on the stock might be different at different times. Other elements might vary. A sufficient pitch had to be given to cause a rapid gravity flow of the stock under all existing conditions. A pitch of two or three or four inches would not be enough. It must be found by practice what pitch of the wire would be enough to bring the speed of the stock up to the speed of the wire. The claims should not be pronounced void because they do not express in inches the amount of elevation required to achieve the result which Eibel had in mind. I think the claims should not be held invalid by reason of indefiniteness.

2. Infringement. The defendant says that its machines do not infringe the claims of the patent in suit; that Eibel's proposition was to give the wire such an elevation that gravity alone, due to the pitch of the wire, would cause the stock to attain the same speed as the wire at the point where the stock would lose its viscosity and settle down upon the wire in a thin sheet. The defendant urges that it has not given its wire such an elevation, and that, therefore, it does not infringe. In other words, the defendant contends that Eibel's invention contemplated that pitch alone should do all the work of bringing the stock from nothing up to an ultimate speed

to aid the other elements in well known use before Eibel. From a study of the proofs now before me, I see no reason to differ with the Court of Appeals in the Second Circuit in its conclusion that no one before Eibel had any knowledge of his theory; and that the slight pitches of the prior art were used in most instances to bring stock to the "dandy-roll' more quickly than when the horizontal wire was used.

It is true, of course, that a slight pitch of two inches causes some slight increase in the speed of the stock on the wire. Eibel's claims are limited to a substantial pitch; for it is only by such assistance of gravity that Eibel could acquire the speed which he sought. He appears to have been invoking this aid of gravity, in correlation with the conditions which he already found in the use of Fourdrinier machines; namely, "drag" and "head."

It is evident that the trivial pitches in the prior art were used for a wholly different purpose from that of Eibel. Those who used them are not shown by the proofs to have appreciated and observed the operative system which Eibel invoked. Their use was so inconsiderable in extent that any possible effect was apparently too small to be capable of observation. They would give no help to anyone seeking to obtain further speed in the use of the Fourdrinier paper machine; they would give no hint in regard to any practical purpose of conforming the speed of the stock to the speed of the wire. If, in using the pitch for drainage, some slight advantage was obtained in reference to equalizing the speed of the stock to that of the wire, it was clearly an unexpected and unappreciated result. And it is clear that such result is not sufficient to constitute infringement. Tilghman v. Proctor, 102 U. S., 707, 711.

If there be any doubt as to patentable novelty, this doubt may well be resolved in favor of the patent, by its commercial utility. The proofs show that when the Eibel process was first put in use at Rhinelander, the high pitch which Eibel had brought to the art was looked upon as revolutionary. Up to that time the usual speed of Fourdrinier machines had seldom exceeded 450 feet per minute, although the whole art was seeking greater speed. It was said that the "fastest machines in the world" had arrived at a speed of about 500 feet per minute; but to attempt to get an increase of speed beyond this limit had met with failure; and where high speed had been tried it had been abandoned, because it was found that at higher speed there was great commotion on the wire, resulting in "wild" paper. After the Eibel idea got fairly before the public, it was at once adopted by substantially the whole art. As a result of using the high pitch, taught by Eibel, the proofs show that the paper machines have been able to increase their speed from 25 to 30 per cent., or even more; so that it is now the common practice to make newspaper at a speed of 600 feet, or even 680 feet, per minute; and that it is not now known what the limit may be to speed. In Loom Company v. Higgins, 105 U. S. 580, 591, the Supreme Court found a new and useful result where a loom was made to produce 50 yards a day when it had never produced more than 40. The teaching of that case has now become common learning in courts

accustomed to pass upon patents. Success makes the result seem simple; and it is quite usual to have witnesses say that the thing was easy, and did not involve any use of the inventive faculty. In the case before me, it does not appear to have occurred, either to the prior patentees, or to machine workers, before Eibel, that high speeds could be attained by using a high pitch. When the result was attained, however, the public was glad to profit by it. And the proofs show that the result of the Eibel invention has been a most extended commercial use of his process. This commercial utility and success may properly be invoked in favor of the patent.

The defendant contends that claims 1, 2 and 3 are void for indefiniteness.

In claim 1, Eibel has the breast-roll end of the paper-making wire in the machine "maintained at a substantial elevation above the level, whereby the stock is caused to travel by gravity, rapidly, in the direction of the movement of the wire." similar language is used in claims 2 and 3. The defendant says that the use of such words as "substantial elevation" and "rapidly" are so indefinite as to render the claims void. Eibel's inventive thought had for its object a process whereby the machine might be run at a much higher speed than heretofore. Eibel found the Fourdrinier machine with the wire running horizontally. He took the elements which were already in use and added to them a process whereby the breast-roll end of the wire is maintained at a sufficient elevation above the level to make the stock travel, by gravity, at great speed. It is apparent from the testimony of the experts that it was impossible to know in advance the exact speed which any particular pitch would cause; this lack of knowledge beforehand was due to the variations in the stock used, and to the varied use of the different elements then employed in operation; sometimes the depth of the "pond" back of the slices would be greater than at others. The "drag" or "friction" of the wire on the stock might be different at different times. Other elements might vary. A sufficient pitch had to be given to cause a rapid gravity flow of the stock under all existing conditions. A pitch of two or three or four inches would not be enough. It must be found by practice what pitch of the wire would be enough to bring the speed of the stock up to the speed of the wire. The claims should not be pronounced void because they do not express in inches the amount of elevation required to achieve the result which Eibel had in mind. I think the claims should not be held invalid by reason of indefiniteness.

2. Infringement. The defendant says that its machines do not infringe the claims of the patent in suit; that Eibel's proposition was to give the wire such an elevation that gravity alone, due to the pitch of the wire, would cause the stock to attain the same speed as the wire at the point where the stock would lose its viscosity and settle down upon the wire in a thin sheet. The defendant urges that it has not given its wire such an elevation, and that, therefore, it does not infringe. In other words, the defendant contends that Eibel's invention contemplated that pitch alone should do all the work of bringing the stock from nothing up to an ultimate speed

equal to that of the wire; that Eibel contemplated that there should be no "head" at all back of the slices, and that "drag" should be done away with altogether, as a factor in accelerating the speed of the stock; and that no machine comes within the Eibel inventive thought unless that part of the stock speed which is contributed by pitch is greater than that part of the stock speed which is due to the other two factors. The learned counsel for defendant urge that when Eibel speaks of a gravity machine, or of a "gravity-feed," he refers to the use of gravity, to the exclusion of all other elements; and that, when, in his claims, Eibel speaks of the stock traveling by gravity, he refers to the use of gravity without any help from other sources. It is to be noted that Eibel's one object was to arrange a process by which the machine could be run at a much higher speed than heretofore. With this in view, Eibel organized his machines at the Rhinelander Paper Company in such a way that they had a pitch of about fourteen inches and run at a speed between 500 and 600 feet per minute. To produce this result he used gravity. He used, also, the elements which he found at hand; namely, the "drag" and the "head," due to the depth of the "pond" back of the "slice." His effort was to get speed; he did not wish to abolish or disregard any of the elements which helped him to get speed.

But, if the contention of the defendant is correct, he did not put his own invention into practical use at Rhinelander, or at any other place, for in practice he did not obtain his speed by gravity alone. In fact, the defendant's experts testify that the mode of operation set forth in the Eibel patent in suit has never been put in practical use by anybody; it was not used at Rhinelander; it was not used in the other mills; it is not embodied in the drawings of the patent.

I cannot sustain such contention. I cannot so construe the specification and claims of the patent. Eibel introduced a new speed-making factor. He proposed to bring the speed of the stock up to the speed of the wire; to use gravity to that end; but I cannot hold that he contemplated that gravity should be used to the exclusion of the other elements which were already in use. He found those elements at work; there is no reason why he should exclude them from helping along the work. The process invented by him begins to operate after the stock has entered upon the wire. His apparent attempt was to get rid of bubbles and wrinkles, before he got to the place on the machine where paper is formed. To do this, he allowed gravity to work with "drag" and with "head." He harnessed all the elements he could find. He brought gravity in with the other elements; and so brought the speed of the stock up to equality with that of the wire. By this means he achieved high speed and also freed the stock on the wire from waves and ripples.

The proofs show that the defendant has used a substantial pitch; —and not merely the trivial pitch employed for drainage adjustments; and that it has used this pitch in order to call gravity into operation, as an accelerating factor, to speed the stock up to a speed equal to that of the wire. I think it must be held that the defendant infringes the principles of the Eibel patent.

The proof indicates that the defendant has used, in some machines, a pitch of twelve or fourteen inches. In these machines, it clearly infringes. Testimony tends to show that it has used a smaller pitch of about six inches in what is called a No. 2 Machine. In the present aspect of the case, I think it unnecessary to decide whether or not the use of the smaller pitch in the No. 2 Machine is or is not an infringement.

Coming to the details of infringement: It is evident from what I have already said that the defendant infringes claims 1, 2 and 3 of the patent. Claims 7 and 8 are machine claims, referring to that element of the machine which is found in claim 3, namely the declination of the paper-making wire from the breast-roll to the guide-roll, and including the suction boxes in such declination. The extent of the declination is not given in precise terms, but it must be "substantially as described;" that is, it must be a substantial declination. It seems to me clear from the evidence that the defendant infringes also claims 7 and 8.

Claim 12 specifies that the speed of the stock and wire shall be so adjusted that waves and ripples on the stock are substantially avoided, and the fibres deposited with substantial uniformity; this being a result obtained by the claims 1, 2 and 3. Claim 12 is a process claim. It clearly involves the principles of claim 1. I think the evidence in the record shows an infringement by the defendant, of claim 12. My conclusion, then, is that claims, 1, 2, 3, 7, 8 and 12 are valid and infringed. A decree may be entered for the plaintiff for an injunction and for an accounting.

The plaintiff recovers costs.

The plaintiff may present a draft decree on or before October 9, 1920. The defendant may present corrections, if any, on or before October 25, 1920. The decree is to be settled October 30, 1920, at ten o'clock, a. m.

Decree.

(Presented as Draft Decree October 8, 1920.)
(Signed as Final Decree November 24, 1920.)

This cause came on to be heard upon the pleadings and upon the evidence for both parties, and was argued by counsel and considered by the court, and upon consideration thereof be it and it hereby is Ordered, adjudged and decreed:

(1) That the patent in suit to Eibel No. 845,224, issued February 26, 1907, is good and valid in law as to claims 1, 2, 3, 7, 8 and 12 thereof, and that the said Eibel was the first, original and sole inventor of the inventions described and claimed therein.

(2) That the plaintiff, Eibel Process Company, is the sole and exclusive owner of said patent and all rights thereunder.

(3) That the defendant, Minnesota & Ontario Paper Company, has infringed said patent by manufacturing and using the inven-

tions set forth in said patent and particularly referred to in said claims 1, 2, 3, 7, 8 and 12.

(4) That a writ of injunction issue out of and under the seal of this court perpetually enjoining the defendant, its officers, servants, agents, workmen and employees from manufacturing, using or selling machines embodying the inventions described in said patent and more particularly referred to in claims 1, 2, 3, 7, 8 and 12 thereof, and from infringing said patent or the plaintiff's rights thereunder in any way whatsoever.

(5) That the plaintiff recover of the defendant all the savings, profits, gains and advantages which the said defendant has derived, received or made by reason of its infringement of said patent, and also any and all damages which the plaintiff has suffered by reason of said infringement, and that the cause be referred to a master of this court to be appointed for the purpose of taking and stating an account of said savings, gains, profits and advantages, and to assess said damages, and to report thereon to the court with all convenient speed; and the said defendant, and its officers, directors, attorneys, agents, clerks, servants and workmen are hereby directed and required to attend before said master from time to time as required, and to produce before him such books, papers, vouchers and documents and to submit to such examination as said master may require.

(6) That plaintiff recover from the defendant its costs to be taxed by the clerk of this court.

By the Court:

GEO. C. WHEELER, [SEAL.]
Clerk.

C. H.

Nov. 24, 1920.

Petition for Appeal.

(Filed November 24, 1920.)

The above named defendant, Minnesota & Ontario Paper Company (formerly Minnesota & Ontario Power Company), conceiving itself aggrieved by the decree made and entered in the above entitled cause, on or about the 24th day of November 1920, does hereby appeal from said decree to the United States Circuit Court of Appeals for the First Circuit for the reasons specified in the Assignment of Errors filed herewith, and prays that this appeal may be allowed and that a citation may be directed to the above named plaintiff commanding it to appear before the United States Circuit Court of Appeals for the First Circuit, to do what may appertain to justice to be done in the premises, and that a transcript of the record, proceedings and papers upon which said decree was made, duly authenticated,

may be sent to the United States Circuit Court of Appeals for the First Circuit.

MINNESOTA & ONTARIO PAPER COMPANY (FORMERLY MINNESOTA & ONTARIO POWER COMPANY),
By NATHAN HEARD,
Its Solicitor.

LIVINGSTON GIFFORD,
A. C. PAUL,
Of Counsel.

Assignment of Errors.

(Filed November 24, 1920.)

And now comes the defendant in the above entitled cause and says that in the record and proceedings therein there is manifest error in this, to-wit:

(1) That the Court erred in decreeing Letters Patent of the United States No. 845,224, issued February 26th, 1907, to Eibel Process Company, as assignee of William Eibel, to be good and valid in law.

(2) That the Court erred in decreeing said William Eibel to be the true, original and sole inventor of the alleged invention and improvements illustrated and described in said Letters Patent, and particularly pointed out in claims 1, 2, 3, 7, 8 and 12 thereof.

(3) That the Court erred in decreeing defendant, Minnesota & Ontario Paper Company, to have infringed upon said Letters Patent and upon each of the claims numbered 1, 2, 3, 7, 8 and 12 thereof.

(4) That the Court erred in decreeing a recovery by said plaintiff of the savings, profits, gains and advantages which the defendant has derived, received or made by reason of its infringement of said patent, and also any and all damages which the plaintiff has suffered by reason of said infringement.

(5) That the Court erred in referring this case to a Master of this Court and appointing him to take and state the account of said savings, gains, profits and advantages, and to assess said damages and to report thereon to the Court.

(6) That the Court erred in decreeing the issuance of a perpetual injunction enjoining the defendant, its officers, servants, agents, workmen and employees from manufacturing, using or selling machines embodying the inventions described in said patent, and more particularly referred to in claims 1, 2, 3, 7, 8 and 12 thereof, and from infringing said patent, or the plaintiff's right thereunder in any way whatsoever.

(7) That the Court erred in decreeing recovery from the defendant to the plaintiff of plaintiff's costs in this suit.

(8) That the Court erred in not decreeing the aforesaid letters Patent to be invalid and of no effect in law.

(9) That the Court erred in not decreeing that defendant has not infringed upon said letters Patent or any claim thereof.

(10) That the Court erred in not decreeing that defendant recover its costs and disbursements in this suit from the plaintiff.

(11) That the Court erred in not dismissing the bill of complaint for want of equity.

NATHAN HEARD,
Solicitor for Defendant.

LIVINGSTON GIFFORD,
A. C. PAUL,
Of Counsel.

Order Allowing Appeal.

(Filed November 24, 1920.)

HALE, *J.:*

Now this day comes the defendant herein by its solicitor, and presents to the Court its petition for appeal, and assignment of errors, and moves the Court for the allowance of appeal to the United States Circuit Court of Appeals for the First Circuit from the order and decree heretofore entered herein, on November 24th, 1920, and also presents its bond in the penal sum of Five Hundred Dollars ($500), and moves the Court for the approval of the same.

It is ordered by the Court that said appeal be and the same is hereby allowed to the United States Circuit Court of Appeals for the First Circuit, and that the bond, this day presented in the penal sum of Five Hundred Dollars ($500), be and the same is hereby approved.

By the Court,

GEO. C. WHEELER, [SEAL.]
Clerk.

C. H.

Dated November 24th, 1920.
Form of order allowing appeal approved.
FISH, RICHARDSON & NEAVE,
Solicitor for Plaintiff.
NATHAN HEARD,
Solicitor for Defendant.

Order Suspending Injunction.

(Filed November 24, 1920.)

HALE, *J.:*

It is hereby ordered that the injunction provided for in the decree this day entered by this court in the above entitled case be suspended, pending the receipt by this court of the mandate from the

United States Circuit Court of Appeals for the First Circuit on the appeal taken from said decree by defendant, as to the four Fourdrinier machies now operated by the defendant at its mill at International Falls, Minnesota, said suspension being conditioned upon the fulfillment by the defendant of the conditions set forth in the mandate of the United States Circuit Court of Appeals for the First Circuit heretofore filed in this cause.

By the Court:

GEO. C. WHEELER, [SEAL.]
Clerk.

C. H.

Dated November 24, 1920.

Assented to:

FISH, RICHARDSON & NEAVE,
Solicitors for Plaintiff.

NATHAN HEARD,
Solicitor for Defendant.

Order for Reproduction of Testimony in Exact Words of Witnesses.

(Filed November 24, 1920.)

HALE, *J.*:

In accordance with the provisions of rule 75 of the General Equity Rules, and at the request of both parties, it is hereby directed that in making up the record on appeal the depositions of the witnesses taken herein shall be reproduced in the exact words of the witnesses.

By the Court:

GEO. C. WHEELER, [SEAL.]
Clerk.

C. H.

Dated November 24th, 1920.

Approved:

FISH, RICHARDSON & NEAVE,
Solicitors for Plaintiff.

NATHAN HEARD,
Solicitor for Defendant.

Citation.

(Filed November 24, 1920.)

(Service Acknowledged Thereon November 29, 1920.)

To the Eibel Process Company, plaintiff, and to Messrs. Fish, Richardson & Neave, its attorneys:

You are hereby cited and admonished to be and appear at the Circuit Court of Appeals of the United States for the First Circuit to be held in the City of Boston, in the State of Massachusetts, thirty

(30) days from and after the day this citation bears date, pursuant to an order allowing an appeal filed and entered in the clerk's office of the District Court of the United States, for the District of Maine, from a decree signed, filed and entered on the 24th day of November, 1920, in that certain suit being in Equity No. 769, wherein you are plaintiff and appellee and Minnesota & Ontario Paper Company (formerly Minnesota & Ontario Power Company) is defendant and appellant, to show cause, if any there be, why the decree rendered against the said appellant, as in said order allowing the appeal mentioned, should not be corrected and reversed and why justice should not be done the parties in that behalf.

Witness the Honorable Clarence Hale, United States District Judge for the District of Maine, this 24th day of November, 1920, and the independence of the United States the 144th.

CLARENCE HALE,
United States District Judge, District of Maine.

November 24th, 1920.

Service of this citation acknowledged this 29th day of November, 1920 on behalf of plaintiff.

FISH, RICHARDSON & NEAVE,
Solicitors for Plaintiff.

Bond of Appeal.

(Filed November 24, 1920.)

Know all men by these presents, that we Minnesota & Ontario Paper Company (formerly Minnesota & Ontario Power Company), a corporation of the State of Maine, as principal, and National Surety Company a corporation of the State of New York, as surety, are held and firmly bound unto Eibel Process Company in the full and just sum of Five Hundred Dollars (-500.00) to be paid to the said Eibel Process Company its certain attorneys, successors or assigns, to which payment well and truly to be made, we bind ourselves, our attorneys, sucessors and assigns jointly and severally, by these presents.

Sealed with our seals and dated this 17th day of November in the year of our Lord Nineteen Hundred And Twenty.

Whereas, lately, at a regular term of the District Court of the United States for the District of Maine, in a cause pending in said Court between Eibel Process Company, Plaintiff, and Minnesota & Ontario Paper Company (formerly Minnesota & Ontario Power Company), Defendant, a decree was rendered against said Minnesota & Ontario Paper Company, and said Minnesota & Ontario Paper Company having obtained an appeal to remove said cause to the United States Circuit Court of Appeals for the First Circuit to reverse the said decree in the aforesaid cause, and a citation directed to said Eibel Process Company citing and admonishing it to be and appear at a session of the United States Circuit Court of Ap-

peals for the First Circuit to be holden at the city of Boston in said Circuit on the — day of —— next.

Now, the condition of the above obligation is such that if said Minnesota & Ontario Paper Company shall prosecute said appeal to effect and answer all damages and costs if it fails to make its plea good, then the above obligation to be void, else to remain in full force and virtue.

MINNESOTA & ONTARIO PAPER COMPANY,
By FREDERICK A. TENANT,
Its Attorney in Fact.
NATIONAL SURETY COMPANY,
By SAMUEL B. REED,
Resident Vice President.

Attest:
COLLINS GRAHAM, [SEAL.]
Resident Asst. Secretary.

Sealed and delivered in the presence of:
E. G. MORRIS.

Approved:
CLARENCE HALE,
U. S. District Judge.

Approved:
FISH, RICHARDSON & NEAVE,
Solicitors for Plaintiff.

Præcipe for and Stipulation as to Transcript of Record on Appeal.

(Filed December 13, 1920.)

To the clerk of the court:

You will please make a transcript of the record in the above entitled cause for use in the Circuit Court of Appeals for the First Circuit, and include therein the following:

(1) Pleadings,

(2) Motion for Preliminary Injunction and Mandate of Circuit Court of Appeals as the same appear in plaintiff's printed record, pp. 5-8,

(3) All depositions in said cause on behalf of both plaintiff and defendant,

(4) The affidavits of James M. Murray, A. W. Bronk and two affidavits of L. G. Wilson (stipulated as depositions) as the same appear in defendant's printed supplemental record,

(5) All stipulations appearing in plaintiff's printed record, defendant's printed record and defendant's printed supplemental record.

(6) All other stipulations on file and of record in the District Court,

(7) Opinion of the Court,

(8) Interlocutory Decree,

(9) Petition for Appeal,

(10) Assignment of Errors,

(11) Order Allowing Appeal,

(12) Order Suspending Injunction,

(13) Citation,

(14) Bond on Appeal,

(15) This præcipe and accompanying stipulation and order of court,

AMASA C. PAUL,
Solicitor and of Counsel for Defendant.

Dated December 1, 1920.

Stipulation as to Transcript of Record.

Whereas, an appeal was allowed by the District Court from the interlocutory decree herein dated November 24th 1920, and,

Whereas, all of the testimony in this cause was taken by deposition, and printed copies of the pleadings and testimony were filed in court and used at the trial of the cause, and

Whereas, a considerable portion of said testimony was expert and in the opinion of both parties it is impracticable to condense the same, and

Whereas, it is difficult and sometimes impracticable to obtain from the United States Patent Office printed patent office copies of Letters Patent, and it is considered unnecessary by counsel for both parties to reproduce the greater portion of exhibits offered in evidence in this cause, many of which consist of blue prints and drawings of machine,

Now, therefore, it is stipulated, by and between counsel, that the testimony and other papers specified in the foregoing præcipe shall be included in the transcript of record on appeal; that all exhibits shall be treated as "models, diagrams and exhibits of material" under the provisions of the rules of the Circuit Court of Appeals, and that the original exhibits shall be sent to said court as provided by said rules.

It is further stipulated that twenty-five printed copies of plaintiff's and defendant's records and defendant's supplemental record shall be filed with the clerk of the Circuit Court of Appeals to be used in preparing the record in said court.

It is further stipulated that defendant shall prepare an exhibit book, three copies of which shall be filed with the court and three

copies furnished to plaintiff's attorneys, the expense thereof to be taxed as costs, which exhibit book shall contain:

(1) Printed Patent Office copies of the patent in suit and of each of the patents offered in evidence, or photostatic reproduction of any patent or patents of which printed Patent Office copies cannot be obtained; and

(2) Reproductions of such other exhibits as shall be desired by either counsel for plaintiff or defendant.

Dated December 1, 1920.

AMASA C. PAUL,
NATHAN HEARD,
Solicitors and of Counsel for Defendant-Appellant.
FISH, RICHARDSON & NEAVE,
Solicitors and of Counsel for Plaintiff-Appellee.

Upon reading and filing the foregoing præcipe and stipulation,
It is ordered, that the testimony on behalf of both plaintiff and defendant shall be incorporated in the transcript of the record on appeal in the words of the witnesses as the same appear in the plaintiff's and defendant's printed records and defendant's supplemental record in this court, and that all exhibits shall be sent to the Circuit Court of Appeals as privided in said stipulation.

CLARENCE HALE,
District Judge.

Dated December 13th, 1920.

Order Extending Time Within Which to File Transcript of Record.

(Filed December 23, 1920.)

HALE, *J.:*

For satisfactory reasons appearing to the Court the time for filing the Transcript of the Record in this cause in the United States Circuit Court of Appeals for the First Circuit pursuant to the appeal allowed is hereby extended for a period of thirty days from the return day of the citation.

By the Court,

GEO. C. WHEELER, [SEAL.]
Clerk.

C. H.

January 22, 1921.

HALE, *J.:*

For satisfactory reasons appearing to the Court the time for filing the Transcript of the Record in this cause in the United States Circuit Court of Appeals for the First Circuit pursuant to the appeal

allowed is hereby further extended for a period of thirty days from January 23rd, 1921.

By the Court,

GEO. C. WHEELER, [SEAL.]
Clerk.

C. H.

Clerk's Certificate.

UNITED STATES OF AMERICA,
District of Maine, ss:

I, George C. Wheeler, Clerk of the District Court of the United States for the District of Maine within the First Circuit, hereby certify that the two (2) volumes entitled as follows:

Volume I, Plaintiff's Record and Proceedings in District Court;
Volume II, Defendant's Record and Supplemental Record;

this certificate being attached to each of said two volumes, constitute the Transcript of the Record on Appeal, including true copies of such proofs, entries and papers on file as have been designated by præcipe in the cause in equity entitled, No. 769, Eibel Process Company, Plaintiff, v. Minnesota & Ontario Paper Company, Defendant. (Formerly Minnesota & Ontario Power Company), in said District Court determined, together with the original Citation issued upon the Appeal of the defendant with the Acknowledgment of Service thereon and together with the original Orders of Court Extending Time for Filing this Transcript of Record in the United States Circuit Court of Appeals.

In testimony whereof, I hereunto set my hand and affixed the seal of said District Court, at Portland, in said District, this nineteenth day of February, 1921.

[SEAL.] GEORGE C. WHEELER,
Clerk.

United States Circuit Court of Appeals for the First Circuit, October Term, 1920.

No. 1504.

MINNESOTA & ONTARIO PAPER COMPANY, Defendant, Appellant,

v.

EIBEL PROCESS COMPANY, Plaintiff, Appellee.

Appeal from the District Court of the United States for the District of Maine.

Before Bingham, Johnson, and Anderson, JJ.

Opinion of the Court.

June 29, 1921.

ANDERSON, *J.:*

The District Court held claims 1, 2, 3, 7, 8 and 12 of the Eibel patent, No. 845,222, dated February 26, 1907, valid and infringed. 267 Fed. 847. The patent is on its face for an "Improvement in Fourdrinier Machines."

For generations the Fourdrinier has been the best known and most commonly used paper-making machine. It consists, in its first section, of an endless wire sieve, passing over a series of rolls at a constant speed. At the wet or breast-roll end of this running wire sieve there is discharged from a flow-box through a slice a stream of paper-making stock, consisting of wood pulp, sometimes with added mineral matter, mingled with from 135 to 200 times its weight in water. The stock has the appearance of diluted milk. The wire mesh over which the stock travels has also a sidewise shaking motion to assist in the proper felting and interlocking of the fibers. The stock is carried along on this wire about 29 or 30 feet, draining off its water as it goes, until it reaches the couch rolls at the farther end of the wire, where it is pressed into the form of a uniformly distributed wet pulp or web, strong enough to hold together. It is then carried through a series of pressing and drying rolls and calendars, which constitute the drying end of the machine. About 20 feet from the breast roll, are placed suction boxes in contact with the under surface of the wire, operating by means of a partial vacuum to assist in the extraction of excess water remaining in the pulp and to compact the sheet by atmospheric pressure.

The foregoing is but a meagre description of the first part of a large and complicated machine upon which paper stock goes in highly diluted liquid form, is subjected to draining, shaking, meshing, pressing and heating processes, until it emerges as a smooth fabric,—news-print.

These Fourdrinier machines are expensive, costing about $100,000 each. As matter of economy, they run continuously, day and night. Speed—which means quantity—and quality of paper, have been for decades the constant quest of paper-makers. In operation it is manifest that, as the stock drains, meshes and settles upon the wire, it must at some point be brought to speed equality with the wire. It is agreed that this point of speed equality is, normally, about 9 or 10 feet from the breast-roll.

The evidence shows, and it is obvious, that if, as the bulk of the water drains out of the stock, there be too great difference between the speed of the wire and the speed of the stock, a commotion of ripples and waves will result which may, and frequently does, cause wrinkles and other defects in the paper. Moreover, if the forming fabric breaks, because of too high speed or other cause, the machine has to be stopped and continuous and economical production is prevented.

The evidence also shows, and it is manifest, that the successful operation of such a machine involves constant study and adjustment of numerous factors; such as the speed of the wire, the weight of paper desired, the quality of the stock (described as quick or slow, accordingly as the fibers part with the water quickly or slowly, as well as containing a varying amount of water ranging from 135 to 200 times the weight of the fibrous matter), the amount of head in the flow-box, as well as the grade of the wire-carrier.

There are three factors, all or any two of which may be used, in any preferred relative proportions, to bring about the necessitated speed equality between the stock and the wire, 9 or 10 feet from the breast-roll:

(1) Initial speed due to the head in the flow-box from which the stock comes upon the wire. Heads in common use run from 2 to 10 inches. Obviously, the greater the head the greater the inital velocity of the stock.

(2) The wire itself may be pitched down-hill so as to give an increasing speed by gravity; it may be level; or it may be tipped the other way so as to require the stock to run uphill. These factors, described as two, are really only one,—head and down-hill pitch being nothing but gravity; or, as the plaintiff's expert put it, the lower the head the more pitch is required.

(3) The third factor is described as "the drag of the wire," meaning the acceleration between a lower initial speed at which the stock is assumed to start upon the wire, caused by the friction or adherence of the stock to the wire, in bringing the speed of the stock up to equality with the movement of the wire, on which it must ride as a pulpy fabric before it reaches the couch roll.

The plaintiff's general contention is that before Eibel made in 1907 his alleged invention, Fourdrinier machines running faster than 450 to 500 feet a minute caused irregularity, or "wildness" in the paper, because at high speeds there was too great a difference between the stock speed and the wire speed to be overcome by the drag, resulting

in carrying the under part of the liquid stock faster than the upper part, thus causing excessive and injurious waves and ripples. It is contended that Eibel conceived a notion described as "a brilliant discovery" of calling in gravity applied by pitching the wire, to supplement drag as a means of speeding up the stock on the wire, thus obtaining a better quality of paper, and also enabling the wire itself to be speeded up beyond what had hitherto been regarded as the normal speed, so as to get a larger output. Eibel applies his alleged invention *by blocking up the breast end of the machine, or* by raising the breast end of the wire by a worm screw, or by any other suitably method. The infringement charged against the defendant is that it is operating its machines with the breast end of the machines, or at any rate the breast end of the wires, raised 12 to 15 inches above the level.

The defendant contends that the patent involves no invention; that Eibel's adjustment of the machines differs merely in degree from practices shown in the prior art; and that if the patent can under any construction be held valid, the defendant does not infringe.

Turning now to the patent, which must be somewhat fully stated: It is termed, as noted above, "Improvement in Fourdrinier Machines." In the specification it is said:

"This invention relates to Fourdrinier machines, and has for its object to construct and arrange the machine whereby it may be run at a very much higher speed than heretofore and produce a more uniform sheet of paper which is strong, even, and well formed. My invention is embodied, essentially, in the first part or element of the machine having the Fourdrinier wire or paper-making wire, and consists in causing the stock to travel by gravity in the direction of movement of the making-wire and approximately as fast as the making-wire moves, thereby resulting in a 'gravity-feed' for the machine. The stock may be and preferably is caused to travel more rapidly than the normal or usual speed of the making-wire for a certain grade of stock, and means are provided for increasing the speed of the machine so as to cause the making-wire to move at a higher rate of speed than usual, being substantially equal to the speed of the rapidly-moving stock. To accomplish this result in a simple manner, the breast-roll end of the paper-making wire is maintained at a substantial elevation above the level, thereby providing a continuous downwardly-moving paper-making wire, and the declination thus given to the wire is such that the stock is caused to travel by gravity in the direction of the movement of the wire and substantially as fast as the wire moves. The declination of the paper-making wire may be adjustable or the speed of the wire may be variable, or both the declination and speed of the wire may be adjustable, in order that the velocity produced by gravity in the stock on the declining wire will approximately equal the speed of the wire. By this arrangement the speed of the machine may be increased to such an extent as to bring the speed of the making-wire up to the maximum velocity of the rapidly-moving stock and a strong, even, and well-formed sheet produced which is more uniform than usual."

4—add.

The drawing in the patent shows the wire elevated at the breast-roll approximately 14 inches, by means of a screw; but the specification expressly says that any other suitable means may be employed for this purpose.

Eibel continues:

"The Fourdrinier wire has usually been arranged to move in a horizontal plane, although I am aware that means have been provided for adjusting the breast-roll end of the wire to different elevations, usually below the level, to provide for running with different grades of stock—as, for instance, with quick stock and slow stock; but so far as I am aware the making-wire has always had to perform the work of drawing along the stock, and as the wire moved much faster than the stock the stock waved or rippled badly near the breast-roll end of the wire, which gradually diminished until an equilibrium was established and a smooth, even, and glassy surface presented, and not until the waving or rippling ceased did the fibers lay down uniformly and produce a well-formed sheet of paper."

But he states:

"In accordance with my invention I operate entirely above the level to cause the stock to travel by gravity at a velocity approximately equal to the speed of the making-wire, which I believe to be a new principle of operation. The breast-roll end of the making-wire *a* is maintained at a substantial elevation above the level, so that the wire declines. The declination of the wire is sufficient to enable the stock by gravity to move at a rapid rate of speed, which speed is substantially equal to the speed of the making-wire, so that the waves or ripples are eliminated."

He adds that the pitch may be continuous from the breast-roll to the guide-roll, or only from the breast-roll to the suction-boxes, preferably the former. Also:

"The elevation above the level at which the breast-roll end of the making-wire is maintained will vary according to the grade of stock; but in any event it will be substantial, so as to cause the stock to move rapidly by gravity."

"For the purpose of increasing the speed of the machine to the maximum I maintain the breast-roll end of the making-wire at a high elevation above the level, so that the stock travels by gravity much faster than the making-wire ordinarily runs for a certain grade of stock, and I then increase the speed of the machine to such extent as to bring the rate of speed of the making wire up to the speed of the rapidly moving stock, and as a result the capacity of the machine is largely increased. I find in practice that by providing a gravity-feed operating substantially as herein described the stock runs smoothly and evenly without waving or rippling, and the fibers are thereby permitted to settle with great uniformity as regards their distribution over the wire, so that the paper in addition to being well formed is very uniform. Furthermore, as the stock is moving with

the paper-making wire instead of being moved by the wire, or essentially by the wire, the formation of the paper will begin at the start and will continue to the end of the travel of the stock with the wire. Furthermore, by making the sheet of paper uniform over all less sulfite or strengthening material is required. Furthermore, as the stock carries less water when arriving at the suction-boxes, the amount of suction ordinarily required may be reduced, thereby reducing the friction due to the making-wire passing over the suction-boxes, and hence increasing the life of the wire."

The claims in suit are as follows:

"1. A Fourdrinier machine having the breast-roll end of the paper-making wire maintained at a substantial elevation above the level, whereby the stock is caused to travel by gravity, rapidly, in the direction of movement of the wire, and at a speed approximately equal to the speed of the wire, substantially as described.

"2. A Fourdrinier machine having the breast-roll end of the paper-making wire maintained at a high elevation, whereby the stock is caused to travel by gravity faster than the normal speed of the wire for a certain grade of stock, and having means for increasing the speed of the machine to cause the wire to travel at substantially the same rate of speed as the rapidly-moving stock, substantially as described.

"3. A Fourdrinier machine having the paper-making wire declined from the breast-roll to the guide-roll, the breast-roll end of the wire being maintained at a substantial elevation above the level, whereby the stock is caused to travel by gravity, rapidly, in the direction of movement of the wire and at a speed approximately equal to the speed of the wire, substantially as described."

"7. A Fourdrinier machine having the paper-making wire declined from the breast-roll to the guide-roll, and the suction-boxes supported at a corresponding declination, substantially as described.

"8. A Fourdrinier machine having the paper-making wire declined from the breast-roll to the guide-roll, and the several suction-boxes arranged at different elevations, substantially as described."

"12. In a Fourdrinier machine, a downwardly-moving paper-making wire, the declination and speed of which are so regulated that the velocity of the stock down the declining wire, caused by gravity, is so related to the velocity of the wire in the same direction that waves and ripples on the stock are substantially avoided and the fibers deposited with substantial uniformity on the wire, substantially as described."

No reference is made in the patent to head as a speed-producing factor. Gravity, due to pitch and not to head, and the drag of the wire, are the only speedy-producing forces recognized by the patent, at any rate directly. In eighteen different places in the specification and twelve claims, Eibel refers to gravity as the force causing the

stock to move approximately or substantially as fast as the wire moves. We have italicized such references in the portions of the patent quoted above.

The parties are in sharp and irreconcilable conflict as to the construction to be put upon the claims in suit. The plaintiff construes claims 1, 2, 3 and 12 as process claims, and contends that the words "substantial elevation" in claims 1 and 3 and "high elevation" in claim 2 cover any elevation of the breast-roll of the paper-making wire appreciably greater than that shown in the prior art, contended to be any elevation exceeding 5, or at any rate 6, inches. Plaintiff's expert testifies that a 5-inch pitch would not necessarily be the Eibel invention, "but it might be on the border line;" that he hardly thinks a 4-inch pitch would involve the Eibel invention. It is therefore conceded by the plaintiff that the prior art shows pitches of 3 or 4 and perhaps 5 inches. Consequently, plaintiff contends that the words "substantial elevation" and "high elevation" in these claims cover all pitches an inch or more in excess of the pitches shown in the prior art.

The defendant contends that, so construed, the so-called process claims are void for indefiniteness and as differentiated from the prior art only by a mere change in degree. Also that the claims, fairly construed, limit or define the words "substantial elevation" and "high elevation" by the later language of the claims which, construed with the specification, means that the pitch must be enough so that gravity alone will bring the stock up to the speed of the wire. It is difficult to read the patent otherwise. As already noted, the patent is silent as to head. As the uncontradicted evidence shows that pitch adequate to eliminate drag is, even with a 2-inch head, not less than 48 inches, and that the defendant's alleged infringement consists only in using a pitch not exceeding 15, or at most 18, inches, the defendant contends that if the patent as fairly construed can be held valid, there is no infringement.

Such pitches as 40 to 54 inches have never been used. It is not now claimed that Eibel discovered that such pitches are useful or that their use would be Eibel's invention. If, therefore, the patent describes such pitches, it describes something not claimed as an invention, as well as something not infringed. If Eibel did not mean such pitch as would practically eliminate drag, in eighteen places the language used requires a strained and unnatural construction.

The plaintiff—at any rate by implication—concedes that the first three claims which cover the essence of the alleged invention can be sustained only as process claims. It is noteworthy that no such word as "process" or "method" is found in these claims or in the specification. But it is not, and cannot be, contended that Eibel invented a new machine. As pointed out by Judge Warrington in the English decision holding the corresponding English patent invalid (European Eibel Co., Ltd. v. Edward Lloyd, Ltd., Illustrated Official Journal (Patents), June 21, 1911, pp. 349, 356):

"The patentee proposes no alteration in the machine itself; the machine remains identically what it was before. He does not produce a new machine; all he suggests is what he considers a novel and useful mode of employing the old machine to produce the same article."

The plaintiff does contend that claims 7 and 8, referring to adjusting the suction-boxes so as to correspond with the pitch or declination of the wire are machine or machine improvement claims. But, apart from prior use, it is difficult to believe that such arrangement of suction-boxes as to enable them to perform their accustomed function of extracting water from the stock moving over the wire above, can be anything other than an ordinary mechanical adjustment. We cannot believe that claims 7 and 8 in and of themselves involve any invention. At any rate, prior use at the Northern Paper Company as early as 1904 effectually disposes of these claims.

Referring, then, to claims 1, 2, 3 and 12,—all of them deal with the old Fourdrinier machine so adjusted that the breast-roll end of the paper-making wire will have a "substantial elevation." The insertion of iron or wooden blocks under that end of the machine, or the raising of the wire by a worm screw, or by any other common device lifting that part of the old machine,—is the only change required by the alleged invention. In a word, the plaintiff contends that the user of a Fourdrinier machine who blocks up the breast-roll end of the machine, say 5, 6 or more inches, is an infringer upon the Eibel patent.

There is obvious difficulty in construing these claims as process claims. They are not so phrased. It is elementary that the patentee can have nothing beyond what he has particularly pointed out and distinctly claimed, so that those familiar with the art may correctly draw the line between public right and private monopoly. McClain v. Ortmayer, 141 U. S. 419; Merrill v. Yeoman, 94 U. S. 568. Eibel says, in effect: "I claim a Fourdrinier machine adjusted at such a pitch, down-hill, that the stock will run as fast as the wire." He does not say "I claim a new process of making paper on a Fourdrinier machine, described as follows," etc.

We find no case which flatly holds that a patentee who, in his specification and claims, refers to a machine, and nowhere claims a patent on a process, has been held entitled to have his patent construed as covering a process.

In American Tube Works v. Bridgewater Iron Co., 132 Fed. 16, an opinion in this court by Circuit Justice Holmes, sitting with Judges Putnam and Aldrich, the following is stated:

"The patent to Adams stated its claim thus: 'What I do claim (as a new article of manufacture) is a tube or cylinder cast out of copper and free from blow holes and other similar defects when produced as herein stated.' We assume that Adams had invented a new and valuable process, which it is unnecessary to describe, but by which he produced a much larger percentage of sound copper tubes than it had been possible to produce before. *But he*

took his patent for the product, and he must stand upon his claim as it was made." (Italics ours.)

See also Boston Elastic Fabrics Co. v. East Hampton Rubber Thread Co., 3 Fed. Cas. 1676; Burr v. Duryee, 1 Wall. 531.

The case of Breuchaud v. Mutual Life Ins. Co., 166 Fed. 753, 756, cited by the plaintiff as authority for its proposition that, "It is immaterial whether they (the claims) are phrased in terms of process or of machine," falls far short of being an authority for so broad and far-reaching a proposition.

Claims 1 and 2 in the Breuchaud patent, held to be process claims, plainly describe a method or process for the construction of subbases for old walls. In claim 1 the word "method" is used and the method described. In claim 2 the phrase "while they are driving" was said by the court to indicate a process. Claims 3 and 4, which were for the product of the process, were held void.

We refer to the difficulty on this point in order to make it clear that we do not, by implication, adopt the plaintiff's rule of construction. We are not now prepared to hold that claims 1, 2, 3 and 12 of the Eibel patent do "particularly point out and distinctly claim" (Rev. Stat. sec. 4888) alleged new processes.

There is much reference in palintiff's brief to "The Eibel principle." Of course there can be no valid patent on a mere "principle." Burr v. Duryee, 1 Wall. 531; Walker, Patents, 5th ed. §7.

But if we assume this first doubtful proposition determined in the plaintiff's favor, there are other difficulties in the way of sustaining the patent that we find insuperable.

On the plaintiff's construction of the first three vital claims it is necessary to construe the words "substantial, elevation" in claims 1 and 3, and "high elevation" in claim 2, so as to avoid the otherwise fatal objection of indefiniteness. What do the words "substantial elevation" and "high elevation" mean?

Now, as already stated, the plaintiff admits that the prior art shows elevations of 4, and perhaps 5, inches in the breast-roll end. The plaintiff is, therefore, necessitated to contend that the words "substantial elevation" and "high elevation" mean something in appreciable excess of the prior art elevation. The result is that, in effect, the plaintiff claims that if the prior art shows pitches of 4 inches, then 5 inches is Eibel's invention; that if the prior art shows 5 inches, then 6 inches is Eibel's invention. Obviously, this construction puts upon the reader of the patent, in construing the words "substantial elevation" and "high elevation," the burden of knowing what pitches had been used in the prior art. Concededly a patent on a mere difference of degree in the use of a principle shown in the prior art is invalid. And so are all the authorities.

Smith v. Nichols, 21 Wall. 112, 22 L. Ed. 566; Grant v. Walter, 148 U. S. 547, 553, 37 L. Ed. 552; Burt v. Evory, 133 U. S. 349, 358, 33 L. Ed. 647; Market Street Railway Co. v. Rowley, 155 U. S. 621, 39 L. Ed. 284; Fox v. Perkins, 52 Fed. 205, 3 C. C. A. 32; Galvin v. City of Grand Rapids, 53 C. C. A. 165, 115 Fed. 511; Eames v. Worcester Poly. Institute, 123 Fed. 67.

We think it very clear that, adopting for the moment the plain-

tiff's own construction of these claims as covering a process and as covering any pitch in the Fourdrinier machine appreciably greater than the 4 or 5 inches shown in the prior art, the claims cover nothing but a difference in degree.

This conclusion will be made plainer if we illustrate the operation of gravity through the two different methods of pitch and head in producing speed on the wire. The evidence shows, and it is plain on elementary principles, that pitch and head are nothing but gravity applied to the liquid stock in two slightly different ways. The uncontradicted expert evidence shows that, ignoring friction,

"* * * the speed of flow attained by water in running down hill is the same as the speed or velocity under which water will be discharged from an orifice under a hydraulic head equal to the vertical height of the hill."

A table based on data taken from an Engineer's Hand Book in common use and printed in defendant's brief will conveniently illustrate this aspect of the problem:

	Initial speed.	3" pitch.	6" pitch.	9" pitch.	12" pitch.	15" pitch.
0 Head	00	138.6	195.6	240.6	276.6	308.4
3" "	240.6	276.6	308.4	340.2	366.6	391.0
6" "	340.2	366.6	391.0	417.0	438.0	459.0
8" "	391.0	417.0	438.6	459.0	481.8	500.4
10" "	438.6	459.0	481.8	500.4	518.4	538.8

The figures in the first column of this table indicate the initial speed at which the liquid stock will enter upon the wire under the various designated heads in the flow-box. The figures in the other columns show the speed that the stock will attain at a point 9 or 10 feet from the flow-box where, normally, there should be equality of speed between the wire and the stock.

Although the plaintiff's patent makes no reference to head as a speed-producing or gravity-using factor, we assume, as plaintiff's counsel contends, that the machine would hardly be expected to operate without any head at all.

Plaintiff contends that heads from 2 to 8 inches are to be regarded as normal. Many illustrations given by the plaintiff's expert are based on a head of 2¼ inches. Compare also Judge Mayer's opinion in 234 Fed. 628. On the plaintiff's proposition, therefore, a 3-inch head could not be regarded as abnormal.

Referring, then, to the table, it will be observed that, assuming the stock projected upon the wire from a 3-inch head, the initial speed will be 240.6 feet per minute; that the speed acquired in traversing one-third of the distance from the flow-box towards the guide-roll will, through the effect of different pitches and a 3-inch head, be as follows:

3" pitch.	6" pitch.	9" pitch.	12" pitch.	15" pitch.
276.6	308.4	340.2	366.6	391

Further analyzing, it appears that the 3-inch pitch, admitted to be prior art, adds to the initial speed produced by a 3-inch head 36 feet; that a 6-inch pitch, claimed to embody Eibel's invention, gives at the same point on the wire a further additional speed of only 31.8 feet; that the increased pitch from 6 to 9 inches increases the speed from 308.4 feet to 340.2 feet or 31.8 feet, and so on.

Now, in the typical case of alleged infringement, the wire on the defendant's machine was said to be moving at a rate of 585 feet per minute. With a machine so operated, and assuming a 3-inch head and a 3-inch pitch, both prior art, the speed induced by gravity from both head and pitch would be 276.6 feet, leaving to be made up by the drag of the wire 308.4 feet. But if, instead of a 3-inch pitch a 6-inch pitch be used (an alleged infringement) with the same head, gravity from such head and such pitch would produce a speed of 308.4, leaving to be made up by the drag of the wire 276.6. The contention then is, that, by increasing pitch-gravity-speed by 31.8 feet, the plaintiff's patent monopoly is invaded. Otherwise stated, reducing the speed induced by the wire from 308.4 feet to 276.6 feet involves infringement.

Other interesting facts appear from this table. For instance, the initial speed of a 6-inch head upon a level wire, 340.2 feet (prior art), is exactly the same as the speed produced one-third of the way down the wire by a 3-inch head, plus a 9-inch pitch, alleged to infringe.

Again, an 8-inch head with a 3-inch pitch (prior art) gives the same result one-third of the way down the wire (417 feet) as a 6-inch head with a 9-inch pitch, claimed to be Eibel's invention.

Again, a 6-inch head with a 3-inch pitch, admittedly prior art, gives the same speed (366.6) feet) one-third of the way down the wire as a 3-inch head with a 12-inch pitch, claimed to embody Eibel's invention.

It will be observed that these equivalent results arise from the fact that 1 inch of head is equal to 3 inches of pitch, because only one-third of the pitch is really operative, as equality of speed between the wire and the stock is attained when the stock has passed only one-third the distance down the wire.

These comparisons sufficiently illustrate in figures the interchangeability of head and pitch as means of using gravity as a speed-producer. The record shows instances of actual experience in using decreased pitch with increased head resulting in equal or greater operating speeds. The plaintiff's expert testified that, so far as speed equality is concerned, the same results can be secured from either head or pitch. And it was speed that Eibel was chiefly seeking. Judge Hale puts it:

"It is to be noted that Eibel's one object was to arrange a process by which the machine could be run at a much higher speed than heretofore." 267 Fed. 855.

But Eibel claims gravity as a speed-producer only when applied through pitch.

For present purposes, the computations in this table, which were elaborately illustrated by charts put in evidence through the defend-

ant's expert, are undisputed. The differences in the methods used by the plaintiff's and the defendant's experts in applying the tables found in engineers' books of recognized authority are negligible. It follows irrefutably that; for most purposes now under discussion, head and pitch are interchangeable methods of applying the same force, viz: gravity as a speed-producer on the liquid stock upon the wire screen. It also follows, and is admitted by the plaintiff, that all of the pitches used by the defendant or by the licensees under the plaintiff's patent fell far short of eliminating drag as a speed-producing factor. Indeed, in the uses complained of by the plaintiff as infringing, drag remains a force nearly equal to, if not greater than, gravity due to pitch as a speed-producer.

While there are trifling conflicts in the evidence as to the adjustment and operation of the defendant's alleged infringing machines, the present point may be sufficiently illustrated by assuming that these machines were adjusted and operated in accordance with the plaintiff's testimony, with a 7-inch head, a 14 to 15-inch pitch; that the speed of the wire was 550 feet per minute; that the speed equality between the wire and stock was reached at the normal point 9-10 feet from the slice. So operated, the expert testimony shows the folowing results:

Total velocity of wire	550 feet
Velocity of stock due to head	350 "
Additional velocity due to pitch	130 "
Balance of velocity due to drag	70 "
Percentage of total velocity due to pitch, about	24
Percentage of velocity due to head	63
Percentage of velocity due to drag	13

If we consider defendant's machines as operated according to the defendant's testimony, at a speed of 585 feet, with 6-inch head and a pitch of 13½ inches, we get the following:

Velocity of wire	585 feet
Velocity due to head	330 "
Additional velocity due to pitch	118 "
Balance of velocity due to drag of wire	137 "
Percentage of total velocity due to pitch, about	20+
Percentage of velocity due to head	56.6
Percentage of velocity due to drag	23+

On this showing, even if the patent is valid, there is no infringement, except on the theory that the patent covers any substantial use of pitch to decrease the drag on the wire. If the patent means, as the Court of Appeals for the Second Circuit apparently held in the Remington-Martin case, 234 Fed. 624, that pitch adequate to bring the stock to speed equality is Eibel, there is no infringement. It would take a 48-inch pitch with a 2-inch head to relieve the wire of all drag. Even if the patent means that pitch must be the pre-

dominating force, there is no infringement; the defendant's predominating force is head.

The question of the amount of pitch covered by the Eibel patent is no mere academic problem. It is vital, and of money importance in this litigation. No decree for an accounting adequate to guide a master can be framed without deciding whether a 6-inch pitch is Eibel's or the public's. After the filing of the bill on January 1, 1917, defendant reduced the pitch on its No. 2 machine from 14 or 16 inches to 6 or 6½ inches, and has so operated it during most of these four intervening years. Judge Hale, at the suggestion of plaintiff's counsel, did not decide whether or not the use of the smaller pitch in the No. 2 machine is or is not an infringement. 267 Fed. 855. But it must be determined in this case whether such use is an infringement,—to be paid for,—or the use of a common right. Plaintiff's contention that this pitch "is fairly close to the border line" and that the defendant "could have avoided any possibility of infringement by putting the wire flat" is unsound. Defendant was not required to avoid mere possibilities of infringement; it was entitled to all uses of its own machine not particularly pointed out and distinctly claimed in Eibel's patent. It will not do to assert, as plaintiff does, that 12-inch pitches are substantial and that 3 or 4-inch pitches (prior art) are negligible, leaving intervening pitches in limbo; a line must be drawn available practically, if not mathematically. This case is thus plainly distinguished from such cases as Vacuum Cleaner Co. v. A. Rot. Valve Co., 227 Fed. 998, and 239 Fed. 544, and Carnegie Steel Co. v. Cambria Iron Co., 185 U. S. 403, and other cases cited by plaintiff on the question of indefiniteness; in all those cases a practically definite limit was stated. In the Eibel patent we find no such limit.

The position learned counsel for the plaintiff are forced to take on this point but illustrates in striking form the otherwise perfectly clear proposition that the Eibel patent is nothing but an attempt to monopolize a difference in degree; that it is only a claim of an improvement in the method of adjusting and operating the machine so indefinite that its own proponents cannot state its limit.

The defendant's experiment in operating this No. 2 machine with the pitch reduced from 14 or 16 inches to 6 or 6½ inches further illustrates the fact that the whole problem is not only one of degree, but of constant adjustment of the operating forces in the machine to different qualities of stock. It appears that this No. 2 machine, operated for a long period with a 6-inch pitch, has produced substantially as much paper, of a stronger fabric, and with less operating trouble, than its duplicate No. 1 machine with about a 13½-inch pitch. The evidence does indicate that the paper produced on the No. 2 machine looks a little "wilder;" but, tested by the tests alleged to be more important, it is contended to be at least as good paper as that produced on the No. 1 machine. Both machines were operated with substantially the same head, although at times the head of the No. 2 machine is said to have been a little higher.

In the light of this evidence, we find it impossible to hold that the difference between a 6-inch pitch and a 14 to 16-inch pitch causes,—

other operating conditions being perhaps slightly varied,—the production of anything other than a slight difference in the look or quality of the paper. At any rate, it does not clearly appear that the additional pitch of 6 or 7 inches, contended by the plaintiff to be a substantial pitch, is an important, or even material, factor in enabling the machine to be operated at a greater speed or with the production of a superior quality of paper.

But whether a pitch of 14 inches does or does not produce more or better paper than a pitch of 6 inches, we think it clear that papermakers are entitled to interchange pitch with head or with drag, and to vary pitch or head in accordance with such judgment as, dealing with any quality of stock or any capacity of machine, they form, through the experimental processes constantly used by operators, in so adjusting their machinery as to produce the largest amount and the highest quality of paper.

We have not found it necessary to review in detail the great mass of evidence concerning prior uses, for, in the view we take of the case, the plaintiff's own admissions as to the nature and extent of 4 or 5 inch prior uses conclude the point in the defendant's favor.

Plaintiff's expert testifies that he hardly thinks "that 4 inches could be considered as a substantial pitch. Q. Why not? A. Because Eibel in his specification attempts to differentiate the pitch he has in mind from what had been previously used when he specified that it is to be substantial."

We cannot accept the theory underlying this testimony. It amounts to saying that a 5-inch pitch is not "substantial" merely because the witness had discovered that 4-inch pitches had been in common use before Eibel. But it is plain that the difference between no pitch and a 4-inch pitch is as great as the difference between a 4-inch pitch and an 8-inch pitch.

The plaintiff suggests, not apparently with much confidence, that this court ought to follow the decision of the Court of Appeals for the Second Circuit in the Remington-Martin case, 234 Fed. 624. We recognize fully the great weight which attaches to a decision by that learned court, and the importance of the principle that there ought not to be conflicting decisions by different Courts of Appeal relative to the validity of the same patent. Nevertheless, the record before us is so different from that which was before the court in the Second Circuit that we do not think that we can properly follow that decision. It is our duty to decide the issues of law and fact as presented by this record. There is before us a large mass of convincing evidence as to prior use which was not in the Remington-Martin suit. We also have the assistance of elaborate expert testimony, illuminating some vital aspects of the problem, not put before that court. The defendant produced no experts in the Remington-Martin case. The court was therefore left to accept the theories of plaintiff's expert.

We must limit ourselves to generalizations; an elaborate and detailed comparison of the two records would unduly prolong a discussion already sufficiently extended. It may, however, be appropriately noted that the defendant contends, not without plausibility, that the decision of the Court of Appeals for the Second

Circuit, construed in connection with the record now before this court, makes that decision an authority for the defendant and not for the plaintiff.

It seems to be clear from Judge Mayer's opinion, 234 Fed. 624, that infringement was not contested in that court. The defendant in that court apparently relied upon the finding as to prior use by Judge Ray in the District Court, 226 Fed. 772, as follows:

"In short, I find from the testimony, which is not impeached, or discredited, or really contradicted, that everything this defendant is doing was done, and well-known and understood with many paper-makers, before Eibel's alleged date of invention."

The defendant now contends that the conclusion of the court above, reversing Judge Ray, is grounded on a misapprehension as to the date concerning which one or more of the defendant's witnesses was testifying as to paper-making conditions. However that may be, it is clear that there is nowhere in the opinion of Judge Mayer any discussion of the importance of drawing a sharp line between the degrees of pitch shown in the prior art and that which is alleged to be covered by the Eibel invention. On the contrary, that court says:

"The pitch of the wire and the wire speed must be so correlated that gravity *will accelerate the stock to speed equality with the wire.*" (Italics ours.)

This language construed in connection with the context shows that the court was referring to speed equality due to pitch and not to head. The statement, therefore, is at least not inconsistent with the defendant's contention that that court construed the claims as calling for an amount of pitch which would eliminate drag. If such be the meaning of that opinion, then, as the evidence before us shows conclusively that none of the pitches used by either plaintiff or defendant even approximate an elimination of drag as a speed-producing force, it becomes apparent that the view of that court is, on the essence of the problem, not inconsistent with the conclusion to which we have come.

The fact that Judge Ray, on a record dealing much less adequately with prior use than does the record before us, reached the same conclusion that we have reached on that point, is not without significance.

Our general views as to the indefiniteness of the claims are also accordant with those expressed by the English court. (European Eibel Co. v. Lloyd, The Illustrated Official Journal, vol. XXVIII. June 21, 1911.)

It is thus apparent that prior decisions, fairly analyzed and construed in the light of the record before us, offer no support to the plaintiff's contention. If they make either way, they make for the defendant.

Again, the plaintiff urges here the consideration given great weight in the Remington-Martin case, as well as by the District Court in this case, the alleged commercial success of the Eibel patent.

It is contended that Eibel's invention was at once adopted by substantially the whole art; that, using it, Fourdrinier machines have

been able to increase their speed from 25% to 30%; that at the time of the trial of this case machines licensed under the Eibel patent were producing daily about 3,400 tons, or substantially two-thirds of all the news print manufactured in the country.

We recognize, of course, the importance of practical commercial success in cases in which that principle may be properly invoked. It has been termed a "hazardous rule." Nat. Sweeper Co. v. Bissell etc. Co., 249 Fed. 196; Nat. Machine Corp. v. Benthall Co., 241 Fed. 72; Harvey Hubbell, Inc. v. Gen. Elec. Co., 267 Fed. 564. It is no safe criterion of patentable novelty. McClain v. Ortmayer, 141 U. S. 419.

But the plaintiff has, perhaps not unnaturally, very much exaggerated this aspect of the record. It appears that of the licensees producing 3,400 tons a day, five of the largest, having a daily production of about 2,200 tons a day, are stockholders in the plaintiff company. It is obvious that to the extent that they are such stockholders their royalties are but payments to themselves. It is also clear that with the prestige which would result from the ownership and use of this patent by five leading paper concerns, commercial success with other manufacturers would be almost assured. Compare Harvey Hubbell Inc. v. Gen. Elec. Co., supra. On this showing, which we infer was not before the court in the Remington-Martin case, no very great weight can be attached to the extent of the commercial use attained.

As to plaintiff's contention that Eibel's invention has increased the average speed of Fourdrinier machines 25 per cent to 30 per cent, we think this claim is not borne out on fair analysis of the whole record. Undoubtedly, since 1907 there has been a considerable increase in the average speed attained by Fourdrinier machines. The record as a whole warrants the contention that some part of that increase is due to the adoption of increased pitch, and that Eibel's disclosure of the advantages of increased pitches has had some practical and beneficial effect in the art of paper making. But pitch is only one factor leading to this result. The fair inference from the record is that increased heads have also become common during the same period; that the machinery manufacturers are putting out heavier machines capable of standing higher power and increased speed; that careful study has been made of the quality of the stock and improvements made in adapting the quality of the stock to more rapid movement. In a word, the art has progressed. An increased pitch—the factor stressed by Eibel—is only one of the large number of factors tending to increased output, without serious impairment of quality. Paper makers must always struggle with variable elements; they must have freedom in adjusting their machines as skill and experience direct.

The plaintiff seeks to avoid the effect of the admitted prior use of pitches, which we must and do find to have been substantial, by contending that such pitches were adopted for drainage purposes only; that they were applied in ignorance of the alleged new principle discovered by Eibel. So contending, plaintiff's argument falls little short of claiming an absolute monopoly for Eibel of the use of gravity

through pitch. But long before Eibel people knew that water would run down-hill and that the steeper the hill the faster the water would run. Moreover, drainage depends in part upon speed, and paper makers must have observed the relation, whether running the stock uphill or down-hill.

The plaintiff invokes the doctrine that accidental and unappreciated results and functions in prior uses are not anticipation, citing as the leading case on this point Tilghman v. Proctor, 102 U. S. 707, 711. Other cases cited are: Tannage Patent Co. v. Donallan, 93 Fed. 811; Hillard v. Fisher Book Typewriter Co., 159 Fed. 439, 441; Pittsburgh Reduction Co. v. Cowles Electric Co., 55 Fed. 301, 307; Wickelman v. A. B. Dick Co., 88 Fed. 264, 266; Anthracite Separator Co. v. Pollock, 175 Fed. 108, 111; Taylor Burner Co. v. Diamond, 72 Fed. 182, 185; Byerley v. Barber Asphalt Paving Co., 230 Fed. 995, 997; German-American Filter Co. v. Erdrich, 98 Fed. 300; Pittsburg etc. Co. v. Seaman-Sleeth Co., 248 Fed. 705, 709.

Accepting fully the doctrine, we think it is not applicable to the situation here disclosed. Plaintiff's own expert admits that "the effect of gravity was always there regardless of how small the pitch was." Compare Brown v. Piper, 91 U. S. 37, 41; Westinghouse v. Boyden Power Brake Co., 170 U. S. 537, 555; Risdon Iron Works v. Medart, 158 U. S. 68.

It is incredible that a skillful operator of one of these great machines would have used a 3 or 4-inch pitch, with or without a substantial head, without paying some attention to the increased speed of the stock thereby induced. We agree with the contention of defendant's counsel that intelligent men in charge of such a machine could not operate it without discovering that commotion, ripples, and "wildness" in the paper would result if the wire travelled at a speed relatively much faster than the speed attained by the stock through head and pitch, one or both. But the direct and affirmative evidence shows that there was prior appreciation of the principle which Eibel now claims as his own discovery.

Patentees frequently obtain advantages in their patents which they did not discover. The principle applies to prior art uses. Compare Scaffolding Co. v. Chain Belt Co., 254 U. S. 32, 37, where Mr. Justice McKenna said:

"We yield to the assertion of counsel that he (the patentee of the patent in suit) cannot be deprived of an advantage because he did not discern it, but the same concession must be given to Murray (a prior patentee). He (Murray) was entitled to all of the benefit that he claimed for his device, *or that can be given to it by formal changes.*" (Italics ours.)

See also Ansonia Brass & Copper Co. v. Electrical Supply Co., 144 U. S. 11; Penn. R. R. v. Truck Co., 110 U. S. 490; Blake v. San Francisco, 113 U. S. 679.

It is true that to change the pitch of the machine was a somewhat troublesome and cumbrous undertaking,—such that an operator would not as matter of common and daily occurrence experiment with varying pitches; but it is also true, as pointed out above, that

head was, for most purposes sought to be attained by the alleged Eibel invention, the equivalent of pitch; and that the record shows that operators were frequently experimenting with different heads. They must, therefore, have observed the action of the stock on the wire at different rates of gravity-induced speed.

Even if, as the plaintiff contends, gravity applied through pitch gives a smoother and more even movement, and thus produces a better quality of paper, than when applied by head, yet, so far as relative velocity with the movement of the wire is concerned, the results would be the same. At most, the distinction between a head-induced speed and a pitch-induced speed was one of slight degree in the amount of commotion arising in the flowing and draining stock.

Besides, as already sufficiently indicated, Eibel does not claim a patent on the distinction between pitch-induced speed and head-induced speed. He ignores the existence of head-induced speed.

Summarizing our conclusions: If we construe the language of the patent according to its natural import as claiming pitch sufficient to eliminate drag, there was no useful invention, and no infringement even if there was invention; if we construe the claims as plaintiff would have them construed, they cover merely a degree, and are void for indefiniteness.

The result is that the decree below must be reversed, the money paid the plaintiff, pendente lite, must be repaid, and the bill dismissed with costs to the defendant in this court.

It is ordered that the money paid by the appellant to the appellee pendente lite under order of this court of May 28, 1917, be repaid by the appellee to the appellant; the decree of the District Court is reversed, and the case is remanded to that court with directions to enter a decree dismissing the bill with costs; and the appellant recovers its costs of appeal from both the interlocutory and the final decrees.

Stipulation.

On May 12 and 13, A. D. 1921, this case came on to be heard and was fully heard by the court, Honorable George H. Bingham, Honorable Charles F. Johnson and Honorable George W. Anderson, Circuit Judges, sitting.

Thereafter, to wit, on June 29, 1921, the opinion of the court (page 207) was announced, and the following Final Decree was entered:—

Final Decree.

June 29, 1921.

This cause came on to be heard May 12 and 13, 1921, upon the transcript of record of the District Court of the United States for the District of Maine, and was argued by counsel.

Upon consideration whereof, it is now, to wit, June 29, 1921, here ordered, adjudged and decreed as follows: It is ordered that the money paid by the appellant to the appellee pendente lite under

order of this court of May 28, 1917, be repaid by the appellee to the appellant; the decree of the District Court is reversed, and the case is remanded to that court with directions to enter a decree dismissing the bill with costs; and the appellant recovers its costs of appeal from both the interlocutory and the final decrees.

By the Court, ARTHUR I. CHARRON,
Clerk.

Thereafter, to wit, on July 13, 1921, the following Stipulation was filed:

Stipulation.

[Filed and Approved July 12, 1921.]

Whereas this court has rendered an opinion dated June 29, 1921, in which, among other things, it is ordered that the money paid by the appellant, Minnesota & Ontario Paper Company (formerly Minnesota & Ontario Power Company) to the appellee under order of said court of May 28, 1917, be repaid by the appellee to the appellant, and

Whereas the appellee desires to remove said case to the United States Supreme Court on writ or certiorari, and it is desired by the parties to protect the rights of both parties and avoid loss with regard to said money paid to the appellee under said order of court,

Now, therefore, it is stipulated and agreed by the parties that, entirely without prejudice to any proceedings in said cause by either party, the money paid by the appellant to the appellee under said order of court, amounting to fifteen thousand three hundred four and 24/100 dollars ($15,304.24) shall be paid to Harrison F. Lyman, of Winchester, Massachusetts, and Amasa C. Paul, of Minneapolis, Minnesota, as trustees, to be by them invested in United States Treasury Certificates, the said certificates to be held by them jointly as trustees to await the final disposition of said cause, and upon the final disposition of said cause to be either repaid, with all interest accruing thereon, to the appellant, Minnesota & Ontario Paper Company, in the event that the decision of this court be not reversed, or, in the event that said decision is reversed and a decree ultimately obtained for the appellee, Eibel Process Company, to be applied, so far as may be necessary, to the satisfaction of any decree for damages, profits or costs ultimately entered in favor of the appellee, Eibel Process Company. Any unexpended balance of said sum and accrued interest, not so invested by said trustees shall be deposited by said trustees in a bank or trust company and shall be ultimately applied as foresaid.

FISH, RICHARDSON & NEAVE,
Solicitors for Plaintiff, Appellee.
NATHAN HEARD,
AMASA C. PAUL,
Solicitors for Defendant, Appellant.

Boston, July 13, 1921.

G. W. A.

Thereafter, to wit, on July 20, 1921, the following Motion for Stay of Issue of Mandate was filed by the appellee:—

Motion for Stay of Issue of Mandate.

[Filed July 20, 1921.]

Now comes Eibel Process Company, appellee in the above-entitled cause, and represents to this Honorable Court that it intends to file a petition in the Supreme Court of the United States for a writ of certiorari.

Wherefore it moves that the issue of the mandate in the above-entitled cause be stayed pending the determination by said Supreme Court of appellee's petition for a writ of certiorari, or until further order of this court.

EIBEL PROCESS COMPANY,
By FISH, RICHARDSON & NEAVE,
Solicitors.

On the same day, to wit, July 20, 1921, the following Order of Court was entered:—

Order of Court.

July 20, 1921.

Upon motion of appellee setting forth that it proposes to file a petition in the Supreme Court for a writ of certiorari, it is ordered that the mandate in this case be, and the same hereby is, stayed until further order of this court upon the condition that said petition is duly filed and presented within the time prescribed by the rules and practice of the Supreme Court of the United States.

By the Court,

ARTHUR I. CHARRON,
Clerk.

Clerk's Certificate.

I, Arthur I. Charron, Clerk of the United States Circuit Court of Appeals for the First Circuit, certify that the printed volumes entitled as follows:—

Volume I., Plaintiff's Record and Proceedings in District Court and Circuit Court of Appeals;
Volume II., Defendant's Record and Supplemental Record;
Volume III., Exhibit Book,

this certificate being attached to each of said volumes, contain and are a true copy of the record and all proceedings to and including August 31, 1921, in the cause in said court numbered and entitled as follows:—

No. 1504.

MINNESOTA & ONTARIO PAPER COMPANY, Defendant, Appellant,

v.

EIBEL PROCESS COMPANY, Plaintiff, Appellee.

In testimony whereof, I hereunto set my hand and affix the seal of said United States Circuit Court of Appeals for the First Circuit, at Boston, in said First Circuit, this thirty-first day of August, A. D. 1921.

[United States Circuit Court of Appeals, First Circuit.]

ARTHUR I. CHARRON,
Clerk.

District Court of the United States.
District of Maine.

EIBEL PROCESS COMPANY,

Plaintiff,

vs.

MINNESOTA & ONTARIO POWER COMPANY,

Defendant.

In Equity.

ANSWER.

I.

Defendant admits the incorporation and citizenship of the parties as alleged in the complaint.

II.

Defendant admits that Letters Patent of the United States No. 845,224 were issued on February 26th, 1907, to the plaintiff, as assignee of William Eibel, of Rhinelander, Wisconsin, for certain alleged improvements in Fourdrinier machines; but denies that the said William Eibel was the first and original inventor of any alleged improvements in Fourdrinier machines described, illustrated or claimed in said Letters Patent, or was lawfully entitled to apply for and to obtain United States Letters Patent for such alleged improvements as set forth in the second and third paragraphs of the complaint.

III.

Defendant denies, upon information and belief, that any patentable invention is described or claimed in said Letters Patent; denies that the alleged invention is of great, or of any, value or utility; denies that plaintiff has been engaged in the business of promoting the use, under license from the plaintiff, of Fourdrinier machines embodying the inventions described and claimed in said patent, and operated as therein described; denies that plaintiff has spent large, or any, sums of money in advertising and carrying on said business, or in promoting the use of said alleged improvement, or making the public acquainted with the advantages thereof; denies that any machines constructed according to the alleged inventions described in said patent, and operated as therein described, have been, or are, in use under license from plaintiff, and denies that said alleged inventions have proved very advantageous and successful.

IV.

Defendant admits the allegations of the fifth paragraph of the complaint, but alleges that said suit was not adequately or properly defended; that in the trial of said suit the prior art was not fully and completely presented to the court, but that the most important and pertinent prior patents and the most important and pertinent uses appearing and existing in the prior art were not pleaded, or proven in said suit; that if a full and complete showing of the patents and uses of the prior art had been set up and proven by the defendant in said suit, and if other important defenses against said patent had been presented to the court, the decision of the Court of Appeals would have been against the validity and infringement of said patent and the said court would have ordered the bill of complaint in said suit dismissed.

V.

Answering the sixth paragraph of the complaint, defendant alleges that neither the plaintiff nor any person, or persons, acting for or under it, has ever made or vended any machines embodying the construction described and claimed in said Letters Patent; and further alleges that if the plaintiff has caused the word "Patented" together with the day and year the said Eibel patent was granted to be affixed to any Fourdrinier machines, the same has been done improperly and illegally.

VI.

Further answering the defendant alleges that said patent is invalid and void for the following reasons:

(a) Because the specification of said Letters Patent is not sufficiently full and exact to enable a person skilled in the art to practice the alleged invention therein set forth; and the claims of said Letters Patent, and each of them, do not particularly point out and distinctly set forth any invention sought to be covered thereby, as required by the statutes.

(b) Because the machine illustrated and described in said Letters Patent is inoperative.

(c) Because all material or substantial parts of the said alleged invention were patented or described in divers Letters Patent of the United States, Great Britain and Germany, prior to the date of the supposed invention thereof by the said William Eibel as follows:

No. 634,228	C. E. Barrett & J. H. Horne,	Oct. 3, 1899
No. 654,651	H. L. Kutter,	July 31, 1900
No. 675,072	T. H. Savery,	May 28, 1901
No. 683,949	H. L. Kutter,	Oct. 8, 1901
No. 684,081	J. W. Moore & J. A. White,	Oct. 8, 1901
No. 691,333	C. E. Barrett & J. H. Horne,	Jan. 14, 1902

No. 742,239 T. H. Savery, Oct. 27, 1903
No. 809,832 J. W. Moore & J. A. White, Jan. 9, 1906
British Letters Patent No. 333 of 1864, granted to James Easton, Jr., and Thos. Leigh.
German Letters Patent No. 112,584 of 1900, granted to A. M. Bottger.

Also in many other Letters Patent, not known at this time to this defendant, definite allegations concerning which, when discovered hereafter, defendant prays leave of court to incorporate herein by suitable amendment hereto.

(d) Because all material or substantial parts of the said alleged invention set forth and claimed in said Letters Patent No. 845,224, were described, prior to the said alleged invention thereof by the said William Eibel, in divers printed publications, to-wit: the specifications and drawings of each of said Letters Patent hereinbefore in the last paragraph referred to, and in printed copies thereof, printed and circulated by the United States Patent Office, and also in other printed publications to which defendant prays leave to refer hereafter by amendment or otherwise, when it has fully ascertained the same.

(e) Because the devices and combinations of devices set forth and claimed in said Letters Patent No. 845,224 had been in public use in the United States for more than two years prior to the application of said Eibel for said Letters Patent by various corporations, firms and individuals, and that among such prior uses are the following, to-wit:

By the J. H. Horne & Sons Company, a corporation, of Lawrence, Massachusetts, and by Charles E. Barrett, J. H. Horne, and John E. Horne, all of Lawrence, Massachusetts; by the Pusey & Jones Company, a corporation, of Wilmington, Delaware; by Thos. H. Savery, of Wilmington, Delaware; said uses by the J. H. Horne & Sons Company being known to said Charles E. Barrett, J. H. Horne and John E. Horne, and to other officers and employees of the J. H. Horne & Sons Company; and said uses by the Pusey & Jones Company being known to said Thos. H. Savery, and to other officers, employees and customers of said Pusey & Jones Company, at Wilmington, Delaware, and elsewhere.

By various other persons, firms and corporations at various places within the United States, the names of such persons, firms and corporations being at present unknown to this defendant, but which it craves leave to supply by amendment to its answer when the same shall have been ascertained.

(f) Because in view of the prior state of the art at the date of the alleged invention by the said William Eibel, and in view

of the common knowledge and practice in the United States in the art of operating Fourdrinier paper making machines, and in the general art of paper making, and in view of Letters Patent and other printed publications illustrating and describing said arts prior to the date of said alleged invention of said Eibel, the alleged new and useful improvement described in said Letters Patent No. 845,224 did not constitute a patentable invention; that the creation of said alleged invention came about solely through the exercise of ordinary mechanical or engineering skill, and that it so originated in the paper mill in which the said Eibel was at the time employed, and without direction, supervision or participation by him; that any subsequent elaboration of such original, ordinary mechanical work by way of execution of further plans and drawings and preparation of specification for Letters Patent involved no more than exercise of mere mechanical or engineering skill; that the arrangement of ordinary Fourdrinier machines with the making wire thereof at the slant or pitch illustrated or described in said Letters Patent, is commonly brought about in the paper making art by the placing of inclined blocks under the standards of such machines and without any reconstruction of or change in said machines, all of which involved no more than the exercise of mere mechanical or engineering skill. Defendant further avers that the same degree and character of mechanical or engineering skill was at and prior to the alleged invention by said Eibel constantly being exercised by the employees of various other paper mills throughout the country, by the use of inclined blocks under the legs of Fourdrinier machines, without changing or reconstructing said machines, which enabled said machines to produce results identical with or fully equivalent to the results alleged to be obtained by the alleged improvement set forth in said Eibel patent.

VII.

Further answering defendant admits that it owns and operates at its paper mill at International Falls, Minnesota, Fourdrinier machines, which machines, defendant avers, are constructed under, in accordance with, and by authority of, the above named Letters Patent to T. H. Savery, No. 742,239, issued October 27th, 1903; and defendant further avers that its said machines do not differ in any material respect or particular from the construction shown and described in said Savery patent, which was issued to said Savery long prior to the date of the alleged invention of said Eibel disclosed in said Letters Patent No. 845,224, in suit herein.

VIII.

Further answering defendant avers that said Letters Patent

No. 845,224 are wholly invalid and void because, for the purpose of deceiving the public, the description and specification filed by the applicant, William Eibel, in the Patent Office, on behalf of the patentee, the plaintiff herein, was made to contain less than the whole truth relative to the applicant's alleged invention or discovery.

IX.

Further answering the defendant avers that the devices used by the defendant and complained of in the said bill of complaint, do not in any sense constitute infringements of said Letters Patent, or of any claim thereof, but embody arrangements and constructions of Fourdrinier machines, devised, constructed and in general public use long prior to the alleged invention set forth in said Letters Patent, and that the claims of said Letters Patent, and each of them, if construed to cover the machines and devices used by the defendant, are invalid.

X.

This defendant, further answering, denies that it has done any act or thing, or is doing any act or thing, or proposes to do any act or thing in violation of any alleged right, exclusive or otherwise, belonging to the plaintiff, or secured to it by said Letters Patent, or that the said plaintiff is entitled to an injunction, either preliminary or perpetual, or to an accounting, or to any other relief prayed in its said complaint.

MINNESOTA & ONTARIO POWER COMPANY,
By E. W. Backus,
President.

VERRILL, HALE, BOOTH & IVES,
Solicitors for Defendant.
AMASA C. PAUL,
Of Counsel.

State of Minnesota,
ss.
County of Hennepin.

On this 17th day of February, 1917, before me, a notary public, came the above named Edward W. Backus, president of Minnesota & Ontario Power Company, the defendant named in the foregoing answer, and, being duly sworn, did say that he has read the foregoing answer and knows the contents thereof, and that the same is true of his own knowledge, except as to matters therein stated on information and belief.

MARY SAPIRO,
(Seal) Notary Public,
Hennepin County, Minnesota.
My commission expires August 7, 1923.

DISTRICT COURT OF THE UNITED STATES.
DISTRICT OF MAINE.

EIBEL PROCESS COMPANY,
Plaintiff,
vs.
MINNESOTA & ONTARIO POWER COMPANY,
Defendant.
} In Equity.

AMENDMENT TO DEFENDANT'S ANSWER.

Now comes the defendant, by its solicitors, and, leave of the court first having been obtained, does hereby amend its answer, heretofore filed to the bill of complaint in the above entitled cause, in the following particulars:

By inserting after paragraph VI, the following paragraph, to be designated as VI[a].

VI[a].

Defendant avers that prior to the alleged invention by the said Eibel of the alleged improvement described and claimed in the aforesaid Letters Patent, said alleged invention and improvement described and claimed therein, and every material and substantial part thereof, were known to and used by, and were in public use and on sale by various persons and concerns, at various places in the United States, and, among others, by

The Kimberly-Clark Company, of Neenah, Wisconsin, in its paper mill at Niagara, Wisconsin, which use began about the year 1901 and was known to Peter R. Thom, of Appleton, Wisconsin, Joseph A. LeValley, of International Falls, Minnesota, and others.

The Kimberly-Clark Company, of Neenah, Wisconsin, in its paper mill at Kimberly, Wisconsin, in two machines purchased by it from the Beloit Iron Works, in the year 1904, and installed in the early part of 1905, which use was known to Peter R. Thom, of Appleton, Wisconsin, N. J. Ross, of Beloit, Wisconsin, and others.

The Northern Tissue Paper Mills, of Green Bay, Wisconsin, in a machine purchased by it from the Beloit Iron Works, of Beloit, Wisconsin, which use was known to N. J. Ross, of Beloit, Wisconsin, and others.

The Hudson River Paper Company, at Palmer's Falls, New York, in machines installed about the year 1897 or 1898, which use was known to N. J. Ross, of Beloit, Wisconsin, Michael J. Argy, of Niagara Falls, New York, John T. Cunningham, of Mechanicsville, New York, Wm. F. Hazel, of Deferiet, New

York, M. J. Foley, of Steubenville, Ohio, and others.

Bayless Pulp & Paper Company, of Binghamton, New York, in a mill operated by it at Binghamton, New York, prior to the year 1901, and in a mill operated by it at Austin, Pennsylvania, subsequent to the year 1901, which uses were known to Geo. E. Bayless, Binghamton, New York, George H. Brown, of Austin, Pennsylvania, and John Anderson, of Ticonderoga, New York.

Pejepscot Paper Company, of Brunswick, Maine, in its mill located at Pejepscot, Maine, and in its mill located at Lisbon, Maine, which uses were known to the officers and employees of said mill, including Chas. Dickinson, its superintendent, and other employees of said company.

Beloit Iron Works, of Beloit, Wisconsin, in machines manufactured by it at Beloit, Wisconsin, and sold at various places throughout the United States, which uses were known to N. J. Ross, treasurer of said company, and to other officers and employees of said company.

Bagley & Sewall Company, of Watertown, New York, in machines manufactured by it at Watertown, New York, and sold at various places throughout the United States, which uses were known to Stuart D. Lansing, president of said company, Clarence E. Kinney, secretary and mechanical engineer of said company, and other officers and employees of said company.

Moore & White Company, of Philadelphia, Pennsylvania, in machines manufactured by it at Philadelphia, Pennsylvania, and sold at various places throughout the United States, which uses were known to J. A. White, president of said company, and to other officers and employees of said company.

Defendant further avers that said alleged invention was described in a printed publication entitled "Practical Paper Making," by George Clapperton, published at London, England, in 1894, by Crosby, Lockwood & Son, 7 Stationer's Hall Court, Ludgate Hill, the particular description referred to being contained in the following words found upon page 93 of said publication:

"The speed must also determine the amount of pitch to be given to the wire. A 40 ft. wire traveling up to 100 ft. a minute requires a pitch of about ¾ inch from the breast roll to the first guide roll, while if driven at a rate of 200 ft. a minute 1¼ inch pitch will be necessary.

MINNESOTA & ONTARIO POWER COMPANY,
By Nathan Heard and
A. C. Paul,
Its Solicitors.

Dated December 3, 1917.

VIII AMENDMENT TO DEFENDANT'S ANSWER

It is hereby stipulated by and between the parties to the above entitled action that the defendant may amend its answer in the form and manner hereinabove set forth and may file the same, and that without further notice of proceedings or cause shown, the judge of said court may at any time make an order permitting defendant to so amend its answer and to file the same as hereinabove set forth.

FISH, RICHARDSON & NEAVE,
Solicitors for Plaintiff,
NATHAN HEARD and
A. C. PAUL,
Solicitors for Defendant.

December 3rd, 1917.

The above entitled matter having been brought on before the court for hearing upon the motion of defendant for leave to amend its answer, heretofore filed, and to file said amendment, as set forth in the foregoing stipulation, and the court being advised in the premises, and there being sufficient cause therefor,

It is ordered, that the defendant be permitted to amend its answer and file its amendment in the form and manner set forth in the foregoing stipulation.

By the Court,
CLARENCE HALE,
Judge.

December 7th, 1917.

District Court of the United States,

DISTRICT OF MAINE.

EIBEL PROCESS COMPANY,
Plaintiff,
vs.
MINNESOTA & ONTARIO POWER COMPANY,
Defendant.

In Equity No. 769.

NOTICE OF TAKING DEPOSITIONS DE BENE ESSE.

Please take notice that on behalf of defendant we shall proceed to take the depositions *de bene esse*, under and pursuant to the authority of the United States Revised Statutes, Secs. 863-865, of the following named witnesses, residing more than one hundred miles from the place of trial of the above entitled suit. The depositions will be taken before Frank H. Ford, Notary Public, commencing on Friday, May 25th, 1917, at 2 o'clock P. M., at the office of Paul & Paul, 854 Security Building, Minneapolis, Minnesota.

The witnesses to be examined are as follows:

Carl F. Beyerl,
John A. Devine,
Cone Barlow,
Joseph LeValley,
John Kerry,

all residing at International Falls, Minnesota. You are requested to be present and cross examine the witnesses.

Upon completion of these depositions, other depositions will be taken at Grand Rapids and Neenah, Wisconsin, Chicago, Ill., and Buffalo or Niagara Falls, New York, of which due notice with names of witnesses will be given.

A. C. PAUL,
Solicitor for Defendant.

To Fish, Richardson & Neave, Boston, Mass., Solicitors for Plaintiff.

Service of the above notice acknowledged this 21st day of May, 1917.

FISH, RICHARDSON & NEAVE,
Solicitors for Plaintiff.

DISTRICT COURT OF THE UNITED STATES.
DISTRICT OF MAINE.

EIBEL PROCESS COMPANY, Plaintiff,
vs.
MINNESOTA & ONTARIO POWER COMPANY, Defendant.
In Equity No. 769.

Depositions taken on behalf of the defendant in the above entitled cause, before Frank H. Ford, Notary Public, commencing on Friday, May 25th, 1917, at two o'clock p. m., at the office of Paul & Paul, 854 Security Building, Minneapolis, Minnesota, pursuant to the annexed notice.

Appearances: On behalf of plaintiff, Mr. Harrison F. Lyman. On behalf of defendant, Mr. A. C. Paul.

And thereupon the following proceedings were had:

CONE BARLOW,

a witness called on behalf of the defendant, being first duly sworn, deposes and says, in answer to questions by Mr. Paul, as follows:

Q1. Please state your name, age, and place of residence. A. Cone Barlow; I am 30 years old; residence at International Falls, Minnesota.

Q2. What is your occupation, Mr. Barlow? A. I am a mechanical engineer and chief draftsman for the Minnesota & Ontario Power Company.

Q3. Where are you employed? A. At International Falls.

Q4. Where were you educated as a mechanical engineer? A. Cornell University.

Q5. How long have you been in the employ of the defendant? A. Since June 1st, last year.

Q6. Are you familiar, in a general way, with the Fourdrinier paper machines in use in the defendant's mill at International Falls? A. I am.

Q7. Have you ever made a drawing showing the arrangement of the blocks under the standards of those machines? A. I have.

Q8. Will you produce the same? (Witness produces print). The blue print produced by the witness is marked, for identification, Defendant's Exhibit A.

Q9. Please explain what is shown by this blue print? A. This blue print shows a series of blocks under the various supporting standards of the Fourdrinier part which give the wire an incline amounting to a total height of thirteen inches over the center line of the breast-roll.

Q10. What is the height of the thinnest portion of the block below the other standards? A. 2 11/16 inches.

Q11. How many of these inclined blocks are used, that is, the inclined blocks used under those standards of these machines? A. There are only two which are tapered blocks; the other two are flat.

Q12. The other two blocks are not inclined? A. No, they are flat, and support the save-alls underneath the wire.

Q13. You are familiar with the general construction of these four Fourdrinier machines, are you? A. I am.

Q14. Please examine the drawings of the patent of T. H. Savery, No. 742,239, October 27, 1903, and state whether or not the machines are or are not, in their general features, like the structure shown in the drawings of this patent? A. I find this machine to resemble our machines at the Falls almost exactly, except that we have two supports for the save-alls where this drawing only shows one.

Counsel for defendant requests that the Savery patent, No. 742,239, be marked, for identification, Defendant's Exhibit B.

Q15. Has any change been made in any one of these machines within the past month or two? A. Yes, there is our No. 2 machine.

Q16. What is that change? A. We have removed the original iron blocks and substituted wooden blocks, and reduced the incline over the center of the breast-roll from 13 inches to 5⅞ inches.

Q17. Have you any drawing showing this present arrangement of the supports? A. Yes, I have.

Q18. Have any changes been made in the machine itself? A. No, sir.

Q19. What are the dimensions of the blocks that are now used in supporting the machine? A. Under the breast-roll, 6¼ inches at the extreme high end; 5⅞ high over the center line of the breast-roll; and 5¼ at the low end. This block is 4 ft. 7¼ in. long.

Q20. What are the dimensions of the other block or blocks? A. The block supporting the save-alls—the block un-

der the support for the save-alls, nearest the breast-roll, is 3¾ inches at the high end, and 3⅜ inches at the low end, and 2 ft. 4 in. long. The block under the second stand, supporting the save-all, is perfectly flat, being 2⅞ inches high, by 2 ft. 4 in. long. Under the standard at the junction of the suction-boxes —suction-box section of the machine—the block measures 2½ inches high end, and one inch at the low end, it being 7 ft. 1¼ in. long.

Q21. Do you know when this change was made in the support of this machine? A. No, I don't.

Q22. Have you, at any time, measured the speed of the No. 1 and the No. 2 machines? A. I have, both of them.

Q23. As I understand you, the No. 1 machine has not been changed? A. No, sir.

Q24. The support has not been changed? A. No, sir.

Q25. And the No. 2 machine the support has been changed, as you have stated? A. Yes, sir.

Q26. Are these machines the same size, the No. 1 and the No. 2? A. Yes, sir.

Q27. And are they located in the same room? A. The same room, side by side.

Q28. Now have you any memoranda that you could refer to, to refresh your recollection, showing the speed of the machines? A. I have.

Q29. When were these measurements taken? A. On May 4th.

Q30. 1917? A. 1917.

Q31. What were the speeds that you measured, and how did you do it? A. These speeds were calculated by taking the revolutions per minute of the various parts of the machine, with a speed counter, and then calculating the velocity in feet per minute from the diameter of the roll over which the paper passed at that point.

Q32. In these machines, by what roll is the making-wire driven? A. By the couch-roll, the bottom couch-roll.

Q33. Were these measurements made on the same day? A. They were.

Q34. Now, will you refer to the first Fourdrinier machine, and refreshing your recollection by your memoranda, state the measurements that you made, calculations you made, and state how you did it, and give the speeds of the parts. A. For the bottom couch-roll, diameter of the roll 28 inches, revolutions per minute, 80, calculated speed of the wire, in feet per minute, 585.

Q35. That would be the speed of the making-wire? A. Yes,

sir. At the first press, diameter of roll 24 inches, revolutions per minute 96, speed of paper, in feet per minute, 603; at the second press roll, diameter of roll 24 inches, revolutions per minute 96, speed of paper, in feet per minute, 603; at the third press, diameter of roll 24 inches, revolutions per minute 97, speed of paper, in feet per minute, 610; at the first dryer, diameter of dryer 60 inches, revolutions per minute 39, speed of paper, in feet per minute, 613; at the bottom calender-roll, diameter 28 inches, revolutions per minute 85, speed of paper, in feet per minute, 624.

Q36. Now, what are the corresponding measurements for the No. 2 machine? A. The No. 2 machine; at the bottom couch-roll, diameter of roll 28 inches, revolutions per minute 80, speed of wire, in feet per minute, 585; at the first press, diameter of roll 24 inches, revolutions per minute 96, speed of paper, in feet per minute, 603; at the second press, diameter of roll 24 inches, revolutions per minute 97, speed of paper, in feet per minute, 610; at the third press, roll 24 inches diameter, 97 revolutions per minute, speed of paper, in feet per minute, 610; at the first dryer, diameter of dryer 60 inches, revolutions per minute 39, speed of paper, in feet per minute, 613; at the bottom calender-roll, diameter of roll 28 inches, revolutions per minute 85, speed of paper, in feet per minute, 624.

Q37. Now, are those speeds the same for the two machines? A. They are exactly the same—they are identical, except the speed for the second press.

Q38. How much does that differ? A. Well, there is a difference of 7 feet per minute faster on the No. 2 machine than the No. 1.

Q39. Did you make any measurement to determine whether the paper increased in length after passing from the making-wire, and if so, what calculation did you make? How did you get at it? A. I took a shaving at the winder and located the water-mark which is left on this shaving as a result of the seam in the wire; I tore the shaving apart at this point and stretched it along the floor until I came to the next water-mark caused by the seam in the wire. I then measured this length and found the length to be 75 feet and 8 inches; I then found the length of the wire to be 70 feet and one inch. The difference between these two measurements, 5 feet and seven inches, shows the stretch in the paper passing through the machine.

Q40. That is the stretch after the web of pulp leaves the making-wire? A. That would be from the point, from the couch-rolls through the calenders, because the water-mark is made at the couch-roll.

Q41. Has this No. 2 machine, since this change, been running at the same speed? A. Yes, sir.

Q42. All the time? A. Yes, sir, all the time.

Q43. And what has been done with the paper made on this machine? A. It has been sold to our customers.

Q44. Gone out with the paper from the other machines? A. Yes, sir.

Mr. Paul: The blue print of No. 2 machine, produced by the witness, is marked, for identification, Defendant's Exhibit C.

CROSS EXAMINATION.

By Mr. Lyman:

XQ45. Referring to Exhibit A, is the block at the left of the drawing, the one located underneath the breast-roll end of the machine? A. Yes, sir.

XQ46. What are those standards that it rests upon? A. They are the standards that support the breast-roll, also the beginning of the Fourdrinier part.

XQ47. There seem to be two standards resting upon this block. What is the one at the left? A. The one at the extreme left, is for the breast-roll, to support the breast-roll; the one at the right, is for the Fourdrinier part.

XQ48. You mean the wire? A. The rails and the whole supporting structure that holds the tube-rolls.

XQ49. The center of the breast-roll would be vertically above the center of the left end of those two supports, would it? A. Not exactly, because, you see, this head block, this block is tapered, it is on an angle, which means that this supporting post for the breast-roll is on an angle with the perpendicular.

XQ50. So it brings the breast-roll— A. The center of the breast-roll would be slightly to the right of that post.

XQ51. What does the second block from the left on the drawing support? A. It supports the first section of the save-all.

XQ52. And that block is not tapered? A. No, sir.

XQ53. What does the third block from the left on the drawing support? A. The second section of the save-all.

XQ54. And that block is not tapered? A. No, sir.

XQ55. The first save-all supporting block is 8 inches thick, and the second one 6 inches thick? A. Yes, sir.

XQ56. What are these standards there, supported by the tapering block at the right of the figure? A. They support the Fourdrinier part at the junction of the suction-boxes.

XQ57. There seem to be three supports joined together?

A. Yes, sir.

XQ58. Resting on this tapering block, two of which are shown broken off at the top. What does the left one of these two broken off support? A. That supports—well, it supports the connection between the tube-roll section of the machine and the suction-box section of the machine. It has that lug there, and then there is a pin that runs through there which allows of lowering or raising the tube-roll section by means of screws. By referring to the large blue print showing the detail of the machine, I find that my remarks are correct, that this portion of the stand supports the joint between the tube-roll section of the machine and the suction-box section of the machine.

XQ59. And what does the right-hand one of the two columns which rests upon this three-legged support, carry? A. It supports the first two suction-boxes.

XQ60. And what does the column that appears at the extreme right of Exhibit A support? A. That supports a rail which runs across to the couch-roll frame and which supports four suction boxes.

XQ61. The suction-boxes are so carried as to share in the incline the wire has? A. Yes, sir.

XQ62. How high above the top of the guide-roll is the top of the breast-roll in the machine, as arranged in accordance with that drawing? A. Referring to another print of the machine, I find that it is 13¼ inches.

XQ63. Referring to the complete drawing of the machine, which you just brought in, I see by the note at the left-hand lower corner that the top of the breast-roll is 14 inches higher than the automatic guide-roll, but shake frame has an adjustment from three inches above to three inches below this level. Is that note wrong? A. That 14 inches is wrong.

XQ64. May I see the other sketch to which you just referred, which says 13¼ inches? A. Yes, sir.

XQ65. In the light of this drawing, explain why you say that this height, top of the breast-roll over the top of the guide-roll, is 13¼ inches rather than 14 inches, as shown by the other drawing? A. Referring to our No. 1 machine, the height from the foundation plate to the top of the breast-roll is 53¼ inches, and the height from the foundation plate to the top of the wire guide-roll is 40 inches; therefore the difference in height between the top of the wire guide-roll and the top of the breast-roll is 13¼ inches.

XQ66. That assumes that the foundation is level? A. Yes, sir.

XQ67. And that is a correct assumption, is it? A. Yes, sir.

XQ68. How much higher is the top of the breast-roll of the No. 2 machine, as now arranged, than the top of the guide-roll of the No. 2 machine? A. 6¼ inches.

XQ69. And upon the No. 3 and No. 4 machines, how much higher is the top of the breast-roll than the top of the guide-roll? A. 13 13/16 inches.

The two drawings produced by the witness are marked, for identification, at the request of the counsel for the plaintiff, Defendant's Exhibits D and E respectively.

XQ70. The note on this Exhibit D shows that the shake-frame has an adjustment from three inches above to three inches below this level. Does that mean that the breast-roll can be raised three inches more or dropped three inches less—raised three inches higher or dropped three inches lower, with reference to the guide-roll than the figures which you have given? A. Yes, sir.

XQ71. Now, in the No. 1 machine, how is that adjustment arranged, is the shake-frame given that extra three inches? A. No; the indicator on the adjustment is at zero, showing that there has been no adjustment made there.

XQ72. How about the No. 2 machine? A. The same for the rest of the machines.

XQ73. What is the speed of the No. 3 machine and the No. 4 machine? A. About 624.

XQ74. About the same? A. Yes, sir.

XQ75. That means paper speed or wire speed? A. Paper.

XQ76. Wire speed about 585? A. Wire speed about 585.

XQ77. That means 585 per minute and 624 per minute, respectively? A. Yes, sir.

XQ78. How wide is the wire on the No. 1 machine? A. 152 inches.

XQ79. How wide is the wire on the No. 2 machine? A. 152 inches.

XQ80. How wide is the wire on the No. 3 and No. 4 machines? A. No. 3 and No. 4 are 182 inches.

XQ81. How much head is carried in the flow-box on the No. 1 machine? A. I don't know.

XQ82. Do you know as to the other machines? A. No, sir, I don't.

XQ83. Never measured it? A. No.

XQ84. What was the reason for making this change—was it made this month? A. Yes.

XQ85. When, what date? A. I don't know.

XQ86. What is the date when that drawing is made, Ex-

hibit E? A. May 21, 1917.

XQ87. What is the date when the sketch which you put in as Exhibit C was made? A. May 8, 1917.

XQ88. Was this new block put in before Exhibit B was made? A. Yes, sir.

XQ89. Did *you have anything to do* with putting in the new blocking? A. I designed the blocks, and instructed the men how to cut them.

XQ90. When did you design the blocks? A. I don't just remember whether it was the Saturday before the change was made. The change was made on Sunday; I don't just remember what the date was though.

XQ91. What other changes were made in connection with the machines when you changed this blocking, if any? A. Why, practically none.

XQ92. How long did it take to make the change? A. Well, the change we made was only temporary—the machine could not be left that way—and we spent about a day on it, all day Sunday.

XQ93. Has anything been done with it since? A. No.

XQ94. It is still running? A. Yes.

XQ95. What else do you contemplate doing to it? A. Well, we can't leave those wooden blocks in there. We must have patterns made, and have those cast iron, if it is to be permanent; we must lower our screens; make changes in our flow-box and our piping, and make some changes in the shake.

XQ96. You haven't begun to do any of that yet? A. No, sir.

XQ97. What was the reason for making this change? A. I really am not familiar with that part of it. I understand it is on account of an infringement of the Eibel patent.

XQ98. Have you samples of the paper made on the No. 2 machine now? A. No, sir.

XQ99. Can you supply me with samples?

Mr. Paul: I will do that by another witness.

XQ100. Have you samples of the paper being made on the No. 1 machine, No. 3 and No. 4? A. No.

XQ101. Can you supply me with that?

Mr. Paul: I don't know whether I have 3 and 4; I have 1.

XQ102. Referring to the matter of the stretch of the paper, your measurements would indicate—the measurements of the shaving, would indicate that a stretch of paper 70 feet and one inch when it left the couch-roll, became extended in passing through the dryers and calenders 5 feet and 7 inches? A. Yes, sir.

XQ103. That would be a percentage of 7.9; will you figure that out? A. I get six per cent here, just roughly.

XQ104. Well, figure it carefully. A. Yes, that's about right.

XQ105. 7.9? (No answer.)

XQ106. Was that shaving taken from the No. 1 machine or the No. 2? A. No. 2.

XQ107. No. 2 machine. Now, take your measurements of the speeds of the various rolls,—I understand that the wire speed on the No. 2 machine you found to be 585 per minute, and the paper speed, as it was rolled up, 624? A. Yes, sir.

XQ108. Feet per minute? A. Yes, sir.

XQ109. That would mean 585 feet of paper, as it left the couch-roll, became 624 feet of paper as it was rolled? A. Yes, sir.

XQ110. That is, it increased 39 feet? A. Yes, sir.

XQ111. As I figure it, that means a percentage of 6.6; is that right? A. That is just about right.

XQ112. How do you explain this discrepancy? A. Why, of course, there is a chance for discrepancy, depending on how long the wire has been in service. The wire will stretch as it runs—the longer it runs on the machine.

XQ113. How does that make any difference? A. I measured the shaving a few days after I took the speeds. It might be that the wire had stretched some in the meantime, which would account to a certain extent for this discrepancy.

XQ114. Please explain a little more clearly how the stretch of the wire makes any difference? A. Oh, if the wire stretches, it would make the measurement from water-mark to water-mark on the shaving longer, and therefore make the percentage of increase greater, and help equalize the discrepancy.

XQ115. As I understand, you took a shaving—you took one shaving—just as the paper left the couch-roll? A. No, the calenders.

XQ116 The calenders. And what did you compare that with? A. I compared it with the length of the wire.

XQ117. Did you measure the length of the wire at that time? A. No.

XQ118. When did you measure the wire? A. I took the length of the wire as being the manufacturer's length.

XQ119. What was that? A. 70 feet and one inch, I believe—yes, 70 feet and one inch. That is what the wire is supposed to measure when it is new.

XQ120. By the way, what is the length of the wires on the other three machines; the same as on the other two? A. Yes,

they are.

XQ121. When were these measurements made? A. On May 4th.

XQ122. And the No. 2 machine had been—the blocking of No. 2 machine had been changed before that day? A. Yes.

XQ123. How long before that day had that change been made? A. I couldn't say exactly.

XQ124. Well, approximately? A. Well., I think about a week.

XQ125. It might have been a month? A. I have inquired, and I find that the change was made on April 8th.

XQ126. Is it possible to vary the wire speed on these machines or must you run them at a given speed? A. No, we can vary the speed.

XQ127. Within what limits? A. I don't know exactly.

XQ128. How do you vary it? A. By the speed of the engine.

XQ129. Did you make another blocking to try out on this machine, except this particular set that was finally put in? A. No.

XQ130. Was any other blocking put in there of a different height from that which is now present, at any time, on the No. 2 machine? A. Than is shown on this print?

XQ131. Yes. A. No.

XQ132. Were any experiments made, as far as you know, with other pitches of the wire, before deciding on this one? A. No.

XQ133. How did you happen to pick out 6¼ inches? A. That was Mr. Paul's suggestion.

XQ134. You don't know why that was suggested? A. I know it was Mr. Paul who instructed me to go ahead on that basis.

XQ135. But you don't know why it was picked out? A. No, I don't.

XQ136. Are you enough of a paper maker to know whether a sheet is smooth on the wire? A. No, I am an engineer.

XQ137. Do you know whether the machine has given any trouble since this change was made? A. No, so far as I know, it has been running satisfactorily.

XQ138. Would you be notified if there were break downs? A. If there was a serious break down, I would be.

XQ139. How often do you see these machines? A. Oh, often three or four times a day.

XQ140. Have you ever, at any other time, measured the speed of any of them? A. No.

XQ141. What means have you of knowing that this speed has been unchanged from the time it was put in to the present time, from the time the new blocking was put in up to the present time? A. Only by talking to the men in the machine room; and the fact that our production is consistent.

RE-DIRECT EXAMINATION.

By Mr. Paul:

RDQ142. You were not given any reason for making this change, were you, in this machine? A. Well, not any specific reason; I was led to understand that by making this change, we would not be infringing on the Eibel patent.

RDQ143. Who gave you to understand that? A. I think it was Mr. Beyerl.

RDQ144. You were instructed to make these drawings for this lower blocking, were you? A. Yes.

RDQ145. By whom? A. By Mr. Devine.

RDQ146. Not by me? A. No, sir.

RDQ147. I thought from your cross examination, you stated that I had given you instructions; did you mean that? A. My idea was that you suggested it. I really received my direct orders from Mr. Devine.

RDQ148. I didn't say anything to you about it? A. No.

RDQ149. And you received your orders from Mr. Devine, and not from me? A. Yes.

RDQ150. And I didn't tell you any reason for wanting this change made, did I? A. Not that I know of.

Saturday, May 26th, 1917, ten o'clock a. m.

CONE BARLOW,

re-called for further direct examination, testified:

By Mr. Paul:

Q151. You were asked yesterday, on cross examination, with reference to the standards used to support the defendant's machines, and attention was called to the blue print, Exhibit A; and I think you stated that two of the standards shown were used for the save-alls, and that the first standard to the right of the breast-roll standard supported the frame, some part of the frame. I will ask you if you have referred, since your testimony, more specifically to the blue print, Defendant's Exhibit D, and if you desire to make any further statement in reference to these standards? A. Yes, I have examined the blue print, Defendant's Exhibit D, again, and find that the first standard to the left, supports both the breast-roll and the shake-rail, and that the standard to the right supports the first section of the save-alls.

Q152. And there are how many standards supporting the save-alls? A. There are three standards supporting the save-alls.

Q153. You stated yesterday, I think, there were two? A. Yes, sir.

Q154. Was there any other point about these blue prints you wanted to explain? A. Well, there is that point, in comparing the save-all supports between the sketch shown on that patent with our machine,—I said yesterday, that the patent showed one save-all support, while the blue print for our machine showed two; this should have been, the patent showed two supports and ours showed three.

Q155. I wish you would refer to the other blue print that you produced, marked Defendant's Exhibit E, and state whether you have computed the angle of decline of the blocks and of the wire in any of the machines in the defendant's mill at International Falls? A. Yes, I have.

Q156. And have you indicated that on this blue print? A. Yes, sir.

Q157. Will you refer to the blue print and state the facts in reference to this matter. A. On No. 1 machine, the blocks give an incline to the various supports of the machine of two degrees, nine minutes, eighteen and eight-tenths seconds; while on No. 2 machine (which is the one the height of the blocks was cut down on), the angle is 58′ 27.7″.

Q158. Have you also the No. 4 machine? A. On No. 3 and No. 4 machine, the angle is 2° 9′ 44.3″.

Q159. That is same as on the No. 1? A. Practically the same.

Q160. Now you have some figures here in reference to the angle of the wire; will you explain what you have there? A. The angle of the wire in each case is a little greater than the angle represented by the inclined blocks.

Q161. How do you account for that? A. This is undoubtedly the result of inaccurate setting of the machine, because there has been no raising of the breast-roll by the screw attachment at that point.

Q162. The machines may have been assembled with a slight decline to the wire originally? A. They undoubtedly were.

Q163. That would account for this discrepancy? A. That would account for this discrepancy.

Q164. Now, what is the angle of the wire in the No. 1 machine, as you figure it? A. 2° 11′ 47.9″.

Q165. And in the No. 3 and No. 4? A. 2° 18′ 3.5″.

Q166. And in the No. 2? A. 1° 2′ 11.8″.

CROSS EXAMINATION.

By Mr. Lyman:

XQ167. How do you calculate the wire angles you have just given? A. I calculate the wire angles by taking the difference in elevation between the top of the breast-roll and the top of the wire guide-roll, and then measuring the distance between the center of the breast-roll and the center of the wire guide-roll, on a horizontal plane.

XQ168. You mean a production of it on a horizontal? A. No, a measurement of it on a horizontal, on the center line of the breast-roll and guide roll.

XQ169. In other words, a base line of a right-angle triangle? A. Yes, sir.

XQ170. How did you calculate the angles of the supports, which you have just given? A. In the same manner, by measuring the height of the block from the foundation line to the top of the block on a line vertically with the center line of the breast roll.

By consent of counsel signature of deponent is waived.

Continuing session May 25th, 1917.

JOHN A. DEVINE,

a witness called on behalf of the defendant, being first duly sworn, deposes and says, in answer to questions by Mr. Paul, as follows:

Q1. Please state your name, age and place of residence. A. John A. Devine, 38 years old, International Falls, Minnesota.

Q2. How long have you lived at International Falls? A. Seven years the first of April, last April.

Q3. What is your employment at the present time? A. Superintendent of the M. & O. Power Co.

Q4. Are you superintendent of the entire plant? A. All but the power end of it, the steam and water.

Q5. You are superintendent of all the manufacturing part of the plant? A. Yes, sir.

Q6. How long have you been superintendent? A. Since last December.

Q7. Prior to last December, what has been your business, your position with the company? A. Assistant superintendent to Mr. Ross.

Q8. Mr. Ross was superintendent prior to December? A. Yes.

Q9. And had you been assistant superintendent all the time he had been there? A. No, when I first went there, I was boss

machine tender.

Q10. That is in the paper mill? A. Just in the machine room alone.

Q11. Now, in a general way, what are the duties of the boss machine tender? A. He has charge of the machines; oversee the help putting on clothing, and when there is any repair work to be done, you order it done.

Q12. How many paper machines are there in that mill? A. Four.

Q13. You had charge of the four machines? A. Yes, I had charge of the four machines.

Q14. When did you become assistant superintendent? A. Let's see—it was about three years ago, as close as I can remember. No, I was night boss. I was assistant superintendent about a year and a half; I was night boss before that, after being boss machine tender.

Q15. During all the time you have been there at International Falls, you have been employed in the paper mill in one of the capacities you have named? A. Yes.

Q16. Now, before coming to International Falls, where had you lived? A. Niagara Falls, New York.

Q17. How long did you live there? A. The last time I was there, I was a year boss machine tender there.

Q18. And had you lived there previously? A. Yes.

Q19. When did you first go there? A. Oh, it must be in 1897 that I first came to Niagara Falls.

Q20. What did you do when you first went to Niagara Falls? A. I worked in the machine shop for the International Paper Company.

Q21. How long did you work in the machine shop? A. About a year.

Q22. Then what did you do? A. I went in, what they call roller boy.

Q23. What mill? A. The International.

Q24. The International at Niagara Falls? A. The International at Niagara Falls.

Q25. How long did you work in that mill? A. I left there in 1907.

Q26. And then where did you go? A. Palmer Falls, New York.

Q27. How long were you at Palmer Falls? A. I think about two years and a half.

Q28. Then where did you go? A. Back to Niagara Falls.

Q29. And from Niagara Falls you came to International Falls? A. Yes.

Q30. What positions in the paper mill did you occupy while you were at Niagara Falls the first time? A. That is the first work I did on a paper machine, and I worked from fourth hand, second hand, third hand, to machine hand.

Q31. What is the work of a machine tender? A. He has charge of that machine, watching belts that they don't run off.

Q32. Where does the second hand work? A. He is what we call a helper to the machine tender.

Q33. And the third hand? A. Helper; he does the rewinding.

Q34. How many men did you have on a machine at that time? A. Here at International?

Q35. How many did you have at Niagara Falls? A. Four.

Q36. International Falls? A. Five.

Q37. Then the machine tender is the man who is responsible for the running of the machine? A. Yes.

Q38. And the boss machine tender has charge of all the machines in the mill? A. He is over the machine tender; he has to take orders from him.

Q39. What were the machines, what make of machines did you have in the mill at Niagara Falls, while you were there? A. Horne & Sons.

Q40. What was the character of the paper that was made there at Niagara Falls? A. News. They made some of this butcher wrapping paper on one machine, but I never worked on it.

Q41. How many machines were there in that mill? A. Six.

Q42. How many different machines did you work on? A. Why, I worked on two—I worked one day when somebody was off,—as a steady job.

Q43. But did you have one machine you generally worked on? A. Pretty nearly, yes.

Q44. The same man worked on the same machine right along? A. Yes.

Q45. In those machines as you were running them at Niagara Falls, what was the position of the wire?

Mr. Lyman: The question is objected to as relating to matters not mentioned in the answer in this case.

A. When I first went there, they were flat, I think. They were raised, it might be a year or two one way or the other from 1900.

Q46. How much were they raised?

Mr. Lyman: Same objection; and it is stipulated that the same objection may be regarded as having been taken to all questions dealing with what happened at Niagara Falls, dealing

with matters relating to Niagara Falls, without further repetition.

A. I should judge from four to six inches; it was quite noticeable, and you wouldn't notice anything less than that.

Q47. How were the making-wires raised on those machines? A. They were blocked.

Q48. What kind of blocks? A. I don't remember how they were blocked; I am pretty sure there was one wedge.

Q49. But you do recall they were blocked? A. Yes, they were blocked. I worked on them.

Q50. Now, how early do you say those blocks were employed in those machines? A. Well, I went on one machine in 1900, and it was very close to that time, because when I went running the machine, when they were raised, I asked what they were doing that for. That is the way I remember. It must have been when I first went on or close to it

Q51. How long were the machines run with the wires in this raised position? A. Why, they were running when I left there.

Q52. And that was in what year? A. 1910 I came out here. I left Niagara Falls in 1910. I left Niagara to go to Palmer in 1907.

Q53. Had there been any change in the pitch of the wire prior to the time when you went to Palmer, in 1907? Had that been raised? A. I don't think so; I won't swear to that.

Q54. Had there been any change when you went back there in 1910? A. No, sir, they didn't change them. I had charge of them.

Q55. They were never changed at any time after they were raised, so far as you know? A. Not that I know of.

Q56. Where was the greatest raise of the wire, which part of the machine? A. Why, it was the same slope all the way down; the breast-rolls was the greatest raise.

Q57. And when you say they were raised from four to six inches, where do you mean they were raised that? A. The breast-roll.

Q58. And from there down to the guide-roll was an even slope? A. Yes, you couldn't run them any other way.

Q59. What speed were those machines run? A. Why—Niagara Falls, do you mean?

Q60. Yes. A. 450 to 480.

Q61. What was the width of the wire? A. It was called 120 inch machine, but we used to trim 111 inches paper—I don't remember the width of the wire.

Q62. While you were boss machine tender at International Falls, were all of the machines run about substantially the

same speed? A. No, we used to operate some of them—the wide ones we run a little slower.

Q63. About what speed were they run? A. They run at different speeds; we run them from 575 up to 600, but later, I would say the last five months, we put them up to 623 or 4.

Q64. Did you know of one of these machines being put down on lower blocks, these machines at International Falls? A. Yes.

Q65. When was that done? A. It was put down, I think, the eighth of April.

Q66. 1917? A. Yes; it was put down on a Sunday. It was either started up on the eighth of April, or we put it down; that is as near as I know.

Q67. It was put down on the Sunday nearest to the eighth of April? A. Yes.

Q68. Then if the eighth of April was Sunday, it was that day? A. We could see that in the record, the running book.

Q69. What kind of blocking is under the machine at the present time? A. Wood.

Q70. What is the height of the blocks at the breast-roll? A. Six inches; I measured them to make sure myself.

Q71. The highest point of the block is six inches? A. Right under the breast-roll it might be higher, it wouldn't where the stand sets. I measured where the breast-roll stand sets.

Q72. You found it six inches? A. Yes.

Q73. Has that machine been running ever since the change was made? A. Yes.

Q74. And how has its speed compared with the speed of the other machines? A. Just the same.

Q75. And has there been any change in its speed since it was put down on the lower blocks; run the same speed now as before? A. Of course the engine varies, but when it was put down, it wasn't intentional; the belt slipped or something like that.

Q76. But the machine is running the same speed as the others? A. Yes, the machine is running the same speed as the others. Of course you take the machine one day and not touch it, you will get a variation, according to the steam you get.

Q77. You might intend to run the machine the same speed from day to day, you might get a variation— A. Of ten feet.

Q77 (continued)—from one day to the other, owing to lack of steam? A. Yes, or the belt slipping; something like that.

Q78. But it is intended to have them run the same speed as before, and it does, as far as you know, except by immaterial variations? A. Yes.

Q79. Did you make any other changes in the machine, when you dropped it down on the wooden blocks? A. Oh, we made some rough troughs to run the stuff from the screens. The screens are too high now; we didn't take time to drop the screens. And one thing more, we got the suction boxes—the suction pipe is on the back side, where it should be across the front. There is one suction box—we have to suck from the front side and the pipe runs over back. We didn't make that change.

Q80. Would you consider that the machine would run satisfactorily on these wooden blocks, as you now have it? A. It has been all right.

Q81. How long do you think it would continue to run on those blocks? A. Well, of course, the wooden blocks in time—your machine will get out of true; it may be out of true. If it was going to stay that way, I would get iron; there is some shake.

Q82. Does it have more shake on these wooden blocks? A. No, but the shake would naturally wear into the blocks.

Q83. What head do you use with these machines at International Falls? A. Why, there is about six inches—six to eight.

Q84. Have you made any change in the head on this No. 2 machine? A. Yes, one inch. Well, that is another thing you can't go by; your stock will vary. Sometimes you will have fine stock; you can't use so much water. That way, you have to have your head down, generally run it lower. We could by letting the slice down, but that is a bad thing to do.

Q85. But as a general thing, how has the head on this machine compared with the other machines? A. One inch higher.

CROSS EXAMINATION.

By Mr. Lyman:

XQ86. Why do you carry the higher head on the No. 2 machine? A. We wanted to try to get that stock out on the wire faster; have more pressure against it to take the place of a pitch. The pitch gives that stock the same speed; your stock is running down hill like. In order to help it out as much as we could, we have this pressure and shove it out that much faster, to keep it in speed with the wire.

XQ87. Do you succeed in doing that? A. Why, the machine is running just the same, but the sheet doesn't look quite so good as the other.

XQ88. What do you mean, it doesn't look so good? A. It doesn't close up quite so good.

XQ89. You mean the finished sheet of paper, or as it is on

the wire? A. As it is on the wire, the finished sheet. It is made on the wire, of course.

XQ90. How do you notice the difference in the product, according to whether you— A. (Interrupting) The quality?

XQ91. Yes. A. Unless you were an experienced paper maker, you couldn't tell. I don't know whether there is any difference. A paper maker once said that.

XQ92. What is the difference in looks to an experienced paper maker? A. Well, you hold a sheet up and look through it; it doesn't look so fine.

XQ93. It doesn't look so fine? A. But a non-experienced man would never notice the difference. I couldn't tell the difference, laying them both there.

XQ94. Well, the idea is to get the stock running at the same speed with the wire, is it? A. That's the idea, yes.

XQ95. Do you think you do that, or don't you do that on the No. 2 machine, as at present arranged? A. Why, she does for about three or four feet from the slice, she runs the same. I couldn't swear to that, she runs so fast.

XQ96. Where does it smooth out on the wire? A. Oh, about four or five feet down she starts to smooth out. The others carry down a little farther.

XQ97. What do you mean by the others? A. The ones that are up.

XQ98. The Nos. 1, 3 and 4 smooth out a little farther down the wire? A. Yes.

XQ99. That is, the No. 2 smooths out a little nearer the slice than the Nos. 1, 3 and 4? A. No, the other way. The water leaves quicker on No. 2; we use more water.

XQ100. You use more water in No. 2? A. Yes.

XQ101. In making the stock, you use a larger proportion of water in the stock on No. 2? A. Yes.

XQ102. Have you had any breakdowns on the No. 2? A. No, the production is about the same. Of course we have had some. The average is about the same, as far as I can see.

XQ103. Do you have records of each machine? A. Yes.

XQ104. What form are they kept in? A. Each tour—there are three tours—we have the production for each machine tender, and it is all figured up.

XQ105. You have those stock records here? A. I haven't. I don't know whether you have, Mr. Paul.

Mr. Paul: I will produce them.

The Witness: I can get them; I have them over at the hotel.

XQ106. Who keeps the records? A. First, they are taken up by the finishing boss that finishes the paper. He weighs

them and then he hands them over—the records, one of them goes to the main office and one goes to me. My clerk takes care of those. I get one and they get a different one in the office; but we have the records there from day to day. I haven't got that with me; I haven't got mine.

XQ107. What records have you with you? A. I have the records from the office

XQ108. They are duplicates of the ones sent you? A. Yes.

XQ109. Have you any more complete ones than those sent to the office? A. I have; each day there is a sheet of paper, just as it is run on the machine. Over there, they have it all in one.

XQ110. Over there, they don't separate it between the different machines? A. Well, they separate it, but it is all on one sheet.

Mr. Paul: One sheet for four machines.

XQ111. Do the sheets that are given to you contain any figures that do not appear upon the sheets that the office has? A. No, they get the same one, because a copy—he makes two at the same time, the boss finisher does. I get one of them, and they get one. They put them in a different form over there, because they could never take care of them.

XQ112. These sheets they have at the office show the production of each machine for each day? A. Yes, so does mine.

XQ113. Do your records make a note of breakdowns? A. Why, yes, every day.

XQ114. Do those go to the office? A. They go to the office, too.

XQ115. Do they appear on the sheets? A. Not on the sheets we have here. We did away with that because—I have them, though, in my part. I don't know whether they keep them in the office or not.

XQ116. Do you prefer the 6-inch or 14-inch pitch? A. 6 or 14?

XQ117. Yes. A. As long as it is going, it don't make a lot of difference to me. If she keeps the production up, and they don't go after me for any more.

XQ118. If they don't want what? A. If they don't want higher speed. I don't know how it would act on higher speed.

XQ119. If you had your choice, which would you keep them, 6 or 14? A. I think I would put them 14, if I had my choice.

XQ120. Why? A. Because the rest are all up there, and I don't want to change them down.

XQ121. Well, taking that particular one? A. Well, it's going just as well, if anything a little better, in production; and

that's all I am looking for. It is even with me whether to leave them 6 or 14.

XQ122. Why don't you bring them all down to 6 inches? A. That means a whole lot of work. I don't want to stay there 24 hours, Sundays. Any time you change your machine, put it up higher, you have a lot of changing to do.

XQ123. Did you have to do any experimenting before you got at the right speed with this six-inch blocking? A. We never changed the speed; we started right up at 623.

XQ124. Did you try any other blocking before you put in this six-inch blocking? A. No.

XQ125. How did you happen to make that change? A. Six inches?

XQ126. How did you happen to make the change to six inches? A. I think Mr. Backus told me to put them down. I never had experience on them flat; I didn't want to try it. I was afraid I couldn't do it. I had never worked on them being flat, that I remember of. I didn't want to make too much of a jump at that time letting them down. He said "Put them down half." So I put them down to six inches. I told them fellows not to put them down all the way.

XQ127. What? A. I told them not to put the blocks down any farther than that.

XQ128. Why did you say six inches instead of eight or seven? Seven would have been about half the previous height? A. Well, we wanted to get down as low as we could. I didn't think eight would make much difference. If we put it eight inches, I didn't think eight and fourteen would make much difference.

XQ129. Is six as low as you thought you could do it? A. I didn't know whether she would run at all or not, because I hadn't any experience on flat. I didn't want to get up against it that way. They wanted me to put them flat.

XQ130. Would it have taken any longer to make the wires flat—level—than to leave them six inches above; or would it have been less of a job? A. I think it would have meant about the same thing, because we would have to let the screens down. There would be too much of a pitch from the screen down to the wire, if we had left them flat. We would have to take the screens out and make new foundation.

XQ131. Would that be more of a job than dropping to six inches? A. Yes.

XQ132. How much more job would that be? A. It would depend on how many were at it. You couldn't get the screens out and in again in less than 12 hours, and get the concrete set.

XQ133. Are all these four machines built substantially alike, except for the width of the wire? A. I think they are, yes.

XQ134. So that the job of making the change would be about the same for each one? A. Oh, yes, they are the same, as far as I know. Of course there is one bigger—might mean more work—heavier.

XQ135. Do you intend to make any other changes in this No. 2 machine, except to substitute iron blocking instead of the wooden blocking? A. Yes, if it is going to stay there, we will have to drop the screens. It is a kind of a tied up job. We will have to run a pipe from the back side to the front side of the suction-boxes.

XQ136. That can be done while the machine is running? A. Oh, no, we can't run without suction.

XQ137. How long would you have to shut down the machine to make this change? A. If we had the irons there, the iron blocking, I could do it in 24 hours; but for the iron blocking—you can't get iron in less than three months. There is no foundry will promise it.

XQ138. Is that the reason you used wooden blocking? A. Yes, sir.

QX139. It hasn't been decided whether to make this six-inch blocking a permanent thing or not? A. No.

XQ140. Trying it out? A. Yes, trying it out.

XQ141. To see whether the paper comes back; whether there is any kick about it? A. Yes, whether it is all right. I haven't heard anything about it at all since—

XQ142. Do kicks come to you naturally? A. Yes. We have had no kicks on the paper. Why in Winnipeg the other day—we don't make that paper there, it is made on the other side—I was told our paper was satisfactory. We make that on the Canadian side—I was thinking we did. We make so many papers, we can't keep track of them.

XQ143. The paper market is pretty strong now, isn't it? A. Well, we never were short of orders, not that I know of.

XQ144. I mean the purchasers are not so critical, as long as they can get something that will hold together? A. No more than any other time.

XQ145. No more demand than any other time? A. I always had orders to make all I could. That is done in the main office.

XQ146. Has it been always an object in paper mills you have been connected with to make as much paper as you could? A. Yes.

XQ147. Why is that? A. Speed?

XQ148. Yes. A. To make more money; the more paper they make.

XQ149. Is speed the great thing they are all looking for? A. That is news. I suppose different qualities, you have to run slow.

XQ150. I mean on news? A. Yes; the faster you run, the more paper they make. Of course there is a limit. You run a machine too fast, it gets all shaky. Some machines will run better at—you will make more paper at 500 than you will at 650.

XQ151. Why? A. They won't stand it; they are built too light for that speed.

XQ152. But you have been trying as long as you know about the business to get as much speed as you can? A. As much as I can, yes.

XQ153. How can you tell whether the stock is getting up speed equal to that of the wire, or not? A. The only way I know is—I couldn't tell at that—is kind of look at the wire. I couldn't explain it.

XQ154. It is a question of whether the stock lies smoothly on the wire? A. Yes, it looks that way. I don't know that anybody knows how fast that stock on the wire is going. I have tried—you can't keep pace with it; I can't. Somebody with better eyes than I have, might.

XQ155. You say that it does smooth out on both the No. 1 machine and the No. 2 machine? A. Yes, it smooths out. The water leaves it quicker on the No. 2 than it does on the No. 1; and that is why we have to use more water to carry it down that much farther; that is why we run the head up higher to try to shove that out faster—more pressure as it comes out from under the slice, to try to shoot it down, see.

XQ156. Are your wide machines running as fast as your narrow ones now? A. Yes—well, there might be ten feet or so difference, because the engine isn't heavy enough to drive them faster; but when we have steam, we figure on running them all the same, as close as we can. We figure on running them as close to 625 as we can, but still be under it. If you get up to 625, you have to pay a different scale of wages.

XQ157. The head on the No. 2 machine, you say, is one inch or two inches higher? A. One inch; it might vary. All according—a man might go up there and turn a valve; then it varies in the stock. If you get close stock, the head will go down—you don't need so much water. But that is a thing that is up and down. When I measured it there once—

XQ158. What did it measure? A. She was an inch then—I think 6 and 7 or 7 and 8.

XQ159. On those Niagara Falls machines you say that there was one block underneath the breast-roll? A. That is something I don't remember. I said it was blocked; I don't remember whether there was a wedge or block under the breast-roll or not.

XQ160. Do you remember whether the suction-boxes were raised? A. They would have to be raised.

XQ161. Why? A. You would have a hump in your wire, if it wasn't; it wouldn't run five minutes.

XQ162. Unless the suction-boxes were raised? A. Unless it was a straight incline.

XQ163. Well, you could run with a pitch of a couple of inches, without raising the suction-boxes, couldn't you? A. Well, I don't know; the less you have, the more apt you would be to run.

XQ164. Well, a little sag in the wire of course? A. Of course, and you lose your suction.

XQ165. If you have too much; but can you not run with a couple of inches without the suction-boxes being raised? A. I would hate to try it, because we have to level that up; any time the machine starts bothering us, we always see that it is level, and the same incline.

XQ166. You think you couldn't get as much as two inches pitch, unless you had suction-boxes? A. I wouldn't swear to it, because I never tried it.

XQ167. What kind of machines were those at Niagara Falls? A. Horne & Sons; that is the two I worked on; I think they were Horne & Sons. Those were the two new ones.

XQ168. What were the numbers of the machines you worked on? A. Five and six.

XQ169. How long did you work at Niagara Falls? A Well, I run a machine there seven years, and I started to work when I was about, well, about 17 or 18 years old; that is the first time. I must have worked there 11 or 12 years.

XQ170. Could you give the dates? A. No. I can remember when I left there to come out here.

XQ171. That was when? A. 1910; there was a strike on that year, and I went to Palmer from there—let's see, it must have been 1907, because as close as I can remember, I run that machine there seven years, until I was 21; that is why I remember it was 1900 when I went on my machine.

XQ172. How long were you at Palmer Falls? A. About two and one-half years.

XQ173. How long did you work at Niagara Falls, after you got back? A. I think it was a year.

XQ174. Then you came out here to International Falls? A. Then I came out here to International Falls; I came there in the spring, and I came here the first day of April, 1910. I don't remember when I come to Niagara Falls, though; I think it was in there; I am not sure.

XQ175. Did you ever measure the blocking at Niagara Falls? A. No, I never measured it.

XQ176. You are merely giving us your recollection of it? A. Yes.

XQ177. How late have you seen those machines? A. I see them last September.

XQ178. What was the condition then? A. I wouldn't be sure. I hardly looked at them. I was in to see the fellows I knew there.

XQ179. Do you know whether they were blocked up? A. I didn't go down that far; I wasn't in there over ten minutes. Only to the front end of the machines.

XQ180. Was it the International Paper Company that ran those machines at Niagara Falls? A. It was called the International Mill, yes.

XQ181. In those machines at the International, was there more than one blocking under the frame of the machine? A. I don't remember whether it was a block or wedge.

XQ182. Was there just one or more than one? A. I say I don't know, I don't remember; all I remember was, it was up. It is a long time since I have been there.

XQ183. Well, if there was blocking—if there was just one block at the breast-roll end of the machine, would that raise the suction-boxes? A. No, that is a different stand.

XQ184. Were all the machines at Niagara Falls running about 450 or only 5 and 6? A. Five and six were supposed to be the fast ones; they were running faster than the others.

XQ185. What was the speed of the others? A. I think 3 and 4 run about 400; I don't remember.

XQ186. How about one and two? A. I don't know much about that; it was off by itself.

XQ187. Was there blocking under one and two? A. I don't remember about that.

XQ188. Do you remember whether there was under three and four? A. I don't know.

XQ189. But you know there was under five and six? A. I wouldn't say blocking or wedge, which.

XQ190. You wouldn't presume to say whether it was two

inches or four inches? A. As I remember, it was quite noticeable.

XQ191. That is all you can remember? A. You wouldn't notice two inches; I don't know whether you would notice four. You go in—some paper-makers came there, and they called them machines running down-hill.

XQ192. Have you any samples of the paper you are making now? A. I haven't any with me, no.

XQ193. Have you some in town? A. No. I don't know whether the rest have, or not. I took the blue print—I have a blue print like that, and a production sheet.

Mr. Lyman: I would like to see those production sheets, Mr. Paul, in connection with this witness.

Mr. Paul: Witness, at request of counsel for defendant, goes to the hotel for the production sheets.

XQ194. Mr. Devine, you have produced three sheets here which show the production in tons during the months of March, April and May, 1917, of Nos. 1, 2 and 3 and 4 machines, at the Minnesota & Ontario Power Co. What are these sheets? Where did they come from? A. Why, I don't know; my clerk, or the clerk in the office made those up; but I asked him for them, to have them ready. I took them off the desk coming out. We keep the small ones; the small sheets like this.

XQ195. On the No. 2 machine there was, on April 14, a production of only nine tons? A. We must have run only about eight hours. We were shutting down for the pulp; we had low water up there, and we shut down the mill.

XQ196. The other machines were running that day? A. Yes. They were running; the only difference, there was one man off, and two of them working three tours. I think that is how that was—I had an old wire on.

XQ197. What difference would the old wire make? A. It would save us putting on a new one.

XQ198. If you did what? A. It might have been an old wire on, that was about ready to come out. I think there were two men working on the machine; we were shy one machine tender; they were doubling up. I think that is the reason.

XQ199. Do you think that was sufficient to reduce the output to nine tons for that day? A. If they only run eight hours; it is, sure, when they run all day and make only that amount. I could get that in the other reports; every shut-down is in the other reports.

XQ200. Will you please send me the detailed reports, the originals? A. Just the same as that—

XQ200a. (Continuing) That show these figures for the three months. (No answer.)

RE-DIRECT EXAMINATION.

By Mr. Paul:

RDQ201. Do I understand, Mr. Devine, that the detailed reports will show just the number of hours each machine ran? A. It don't show the number of hours they run, but if shut down, they would show.

RDQ202. It shows the number of hours each machine is shut down? A. Yes, sir.

RDQ203. And it will show the reason for its being shut down? A. Yes, sir.

RDQ204. So that, in April, it will show why the small production on the machine No. 2, on the 14th of April, and no production on the 20th? A. Yes, it will show that; the boss finisher can testify to that.

RDQ205. When you go back to International Falls, will you send those detailed reports down to me? A. I will.

RDQ206. According to your recollection, how does the pitch on this No. 2 machine compare with those on the machines at Niagara, you have referred to? A. It looks about the same.

RDQ207. Now on the suction-boxes on these machines, is there any way of tilting them or adjusting them? A. You can leave the screws down.

RDQ208. That will change the angle of the suction-boxes? A. One suction-box; leave your screws down lower on one side and tighten up on the other.

RDQ209. You can tilt the top of the box in that way? A. Yes, sir.

RDQ210. Can you vertically adjust the tube-rolls? A. Well, there is a screw under each roll.

RDQ211. Each tube-roll can be adjusted separately? A. Yes, sir.

Mr. Paul: The three sheets produced by this witness are marked for identification Defendant's Exhibit F.

By consent of counsel, signature waived.

JOSEPH A. Le VALLEY,

a witness called on behalf of the defendant, being first duly sworn, deposes and says, in answer to questions by Mr. Paul, as follows:

Q1. Please state your name, age, and place of residence. A. J. A. Le Valley, International Falls, Minnesota, age 39 last November, 30th.

Q2. What is your occupation? A. Paper machine tender.

Q3. By whom are you employed? A. By the Minnesota &

Ontario Power Company.

Q4. How long have you been employed by the Minnesota & Ontario Power Co.? A. Five years, the 27th day of June.

Q5. How long have you been working in paper mills? A. 26 years.

Q6. Where have you worked prior to coming to International Falls? A. Brokaw, Wisconsin.

Q7. That was the last place you were employed? A. That was the last place I was employed before coming to International Falls.

Q8. You have worked in various places in the paper mills? A. I worked in Park Falls, Rhinelander, Niagara, Wisconsin, and Marinette.

Q9. When did you work at Niagara, Wisconsin? A. I worked in Niagara, Wisconsin, in 1901.

Q10. How long were you there? A. I was there six years and two months.

Q11. What was your work while you were at Niagara, Wisconsin? A. Third hand there, and back-tender; spare-hand and run a paper machine.

Q12. How long did you run a paper machine? A. In the neighborhood of about a year and six or seven months; I don't remember exactly; but in that neighborhood.

Q13. What company owns the mill at Niagara? A. Kimberly-Clark Company.

Q14. Who was the general superintendent of the Kimberly-Clark Company at that time? A. Peter Thom.

Q15. What kind of paper was being made at the Niagara mill while you were working there? A. Butcher's manila and print news.

Q16. How many machines were there? A. There were two.

Q17. Do you remember what make they were? A. Bagley & Sewall.

Q18. What was the position of the making-wire in those machines?

Mr. Lyman: Just a moment. Objected to as not referring to any matters set up in the answer in this case.

A. What kind of wire was that?

Q19. No; what was the position of them? A. The Fourdrinier?

Q20. What was the position of the making-wire in the Fourdrinier machine you were running there, was it level or on an incline? A. In 1901 it was on a level; between 1901 and 1902 it was raised six inches.

Mr. Lyman: It is stipulated that the above objection ap-

plies to all questions along the same line as the other, without further repetition.

Q21. How was this incline given to the making-wire; how did they get the incline pitch to the wire? A. By raising the Fourdrinier.

Q22. How was that supported? A. On blocks.

Q23. What did you say was the amount of raise at the breast-roll? A. Six inches.

Q24. Was the machine raised also at the suction-boxes? A. I believe they were. I can't exactly remember whether they were raised there or not; I think they were.

Q25. Do you recall whether or not the wire extended in a straight line from the breast-roll to the guide-roll? A. Yes.

Q26. Now, how long were those machines used with that making-wire raised, while you were there? A. How long were they used after that?

Q27. Yes. A. Well, they were used five years.

Q28. All the time you were there? A. Yes, sir.

Q29. Were they in that condition when you left there? A. Yes, sir.

Q30. Where did you go from Niagara mill of the Kimberly-Clark Co.? A. I went to Rhinelander.

Q31. That is known as the Rhinelander mill? A. Rhinelander Paper Company.

Q32. What did you do with the Rhinelander Paper Company? A. I worked there.

Q33. What was your position? A. I worked running the winder.

Q34. How long did you stay there? A. I stayed there about seven to eight months.

Q35. And then where did you go to? A. From there I went to Park Falls.

Q36. And then from Park Falls? A. To Brokaw, Wisconsin.

Q37. And from Brokaw to International Falls? A. From Brokaw to International Falls, where I am at the present time.

Q38. What was the position of the making-wire in the machines at Rhinelander, was that on a level or on a pitch? A. On a pitch.

Q39. How much incline did the wires have in those machines? A. I think it was all the way between 10 and 14 inches; I never measured it; I don't know.

Q40. What means did they have for giving the wire on the Rhinelander machines a pitch; how did they get the pitch? A. Well, I wasn't there at the time they put the pitch on there; I

don't know.

Q41. At the time you were there, what gave the wire the pitch; how was the machine supported, or the breast-roll supported, or whatever was supported, to give the wire an incline; what was the means that were employed? A. On the—

Q42. On the Rhinelander machines? A. You mean how was it raised?

Q43. Yes. A. It was raised by a screw and gears.

Q44. Anything else? A. And there was blocks under it.

Q45. They had both blocks and screws? A. Screws so you could raise it; and I think they put blocks under the Fourdrinier and released the screws.

Q46. What machine do you run at International Falls? A. No. 3.

Q47. Are you familiar with the No. 2 machine? A. I have run No. 2 machine one day.

Q48. What is the pitch of the No. 2 machine? A. I have never measured that pitch; I don't know.

Q49. You know it is lower than No. 3? A. It is lower than No. 3 is.

Q50. How about the speed of No. 2 and No. 3? A. About the same, 623 feet per minute.

CROSS EXAMINATION.

By Mr. Lyman:

XQ51. How do you get these speeds, Mr. Le Valley? A. How is that?

XQ52. How do you get the speeds on those two machines? A. We take the bottom calender-roll.

XQ53. When were you in Marinette, Wisconsin? A. I was in Marinette, Wisconsin, last, in 1901.

XQ54. When did you go there first? A. When I was five years old.

XQ55. When did you first go there in connection with the paper mill? A. In 1901, when I started to work there.

XQ56. How long did you work at Marinette? A. Ten years.

XQ57. When did you go to Niagara Falls? A. (Interrupting) I made a mistake there; I said 1901; it was 1891 I started to work; I made a mistake there.

XQ58. You worked there until 1901? A. I worked there until 1901.

XQ59. Then you went where? A. To Niagara, Wisconsin.

XQ60. When did you leave Niagara, Wisconsin? A. In 1907.

XQ61. What month? A. February 19.

XQ62. When did you leave Rhinelander? A. I left Rhine-

lander in November—I don't exactly remember the day, but it was in November.

XQ63. 1907? A. 1907.

XQ64. When did you start in at Park Falls? A. I started at Park Falls in the month of March, on the fifth.

XQ65. Of what year? A. What is it?

XQ66. Of what year? A. 1908.

XQ67. What were you doing between the time you left Rhinelander and started at Park Falls? A. I was in the grocery business, at Polaski, Michigan.

XQ68. When did you leave Park Falls? A. When did I leave Park Falls?

XQ69. Yes. A. In September—I don't know exactly what date it was—in the month of September.

XQ70. What year? A. 1908.

XQ71. And when did you start in at Brokaw? A. In September.

XQ72. That same year? A. That same year.

XQ73. How long were you at Brokaw? A. I was there three years—about three years, I don't exactly remember now, about in that neighborhood.

XQ74. Then you went directly from there to International Falls? A. Yes, sir.

XQ75. You started in at International Falls when? A. Last June—five years ago this next coming June 27th.

XQ76. That will be June 27th, 1912? A. Yes.

XQ77. Did you go directly from Brokaw to International Falls? A. Yes, sir.

XQ78. Then you must have been at Brokaw nearly five years? A. I don't remember how long I was there at Brokaw.

XQ79. Nearly four years? A. In the neighborhood of three years; I don't remember exactly.

XQ80. What was your work at Park Falls? A. I was on nights; similar to night superintendent.

XQ81. You had charge of both machines? A. There was only one machine there at that time; I had charge of that one machine, and the little pulp mill that was there, the warehouse and the office.

XQ82. What was your work at Brokaw? A. Running paper machine.

XQ83. Did you put any pitch on the wire at Park Falls? A. Not while I was there.

XQ84. Were they making news? A. They were making news.

XQ85. Why didn't you put pitch on it? A. I didn't have

authority to put any pitch on there.

XQ86. At Brokaw did they have a pitch on the wire? A. There was no pitch at Brokaw.

XQ87. Were they making news? A. No, sir.

XQ88. What was the reason for making this change from the 14 inches to 6 inches on the No. 2 machine at International Falls, recently? A. What was the reason that they made it?

XQ89. Yes. A. Well, I wasn't there when the pitch was put up from 6 to 14 inches.

XQ90. No. A. At International Falls, you mean?

XQ91. Yes. A. I wasn't there when the pitch was put up.

XQ92. What was the reason it was recently dropped on the No. 2 machine from 14 inches to 6 inches? A. I don't know anything about it.

XQ93. When you were running it the other day, it was running at six inches? A. I didn't run it before when it was on the 14 inch pitch.

XQ94. What sort of paper was it making when you were running it the other day? A. Print, newspaper.

XQ95. As good was it as you make on the other machines? A. It was as good in a test; it wasn't as good looking.

XQ96. What difference was there in the looks? A. It wasn't formed as good.

XQ97. That is what you call "wild paper?" A. Yes, sir.

XQ98. Were there any breakdowns on the machine that day you were running it? A. No, sir, not any more than usual.

XQ99. This mill at Niagara, Wisconsin, that you were speaking of, had two machines? A. Yes, sir.

XQ100. Both Bagley & Sewall? A. Yes, sir.

XQ101. What was the width of the wires in those machines? A. 154 inches.

XQ102. What was the speed on those machines? A. 475 feet.

XQ103. Both of them? A. Both of them.

XQ104. You said 475? A. I said 475 feet.

XQ105. Was that paper speed or wire speed? A. That is paper speed.

XQ106. Was that blocking of wood under those machines? A. Under what machines?

XQ107. The ones at Niagara, Wisconsin? A. They were iron.

XQ108. They were iron? A. Yes, sir

XQ109. Who put in that blocking? A. Who put that—

XQ110. Yes, who put that blocking in? A. What was that man's name? (Pause)—Ludwig—Mr. Ludwig.

XQ111. What was he, mill mechanic? A. He was the superintendent.

XQ112. How long ago did you see those machines last? A. Oh, I went there about six months after I left there, on a visit; that was in 1907, I believe. I ain't been there since.

XQ113. Did they have any pitch on the wires at Marinette? A. No, sir.

XQ114. Did they ever try any higher blocking on those machines? A. Where at?

XQ115. At Niagara, Wisconsin? A. No, sir.

XQ116. Ever try any lower? A. They never lowered them after they raised them.

XQ117. Did they ever try lower blocks before they put in the higher ones? A. No, sir.

XQ118. Is Mr. Ludwig here? A. No, sir, I don't know where he is.

XQ119. When did you see him last? A. 1902.

XQ120. What was his first name? A. I never learned his first name; I don't know what it was, I couldn't say.

XQ121. On the Rhinelander machine you said that there was blocking, and in addition there was a screw operated by a gear? A. At Rhinelander?

XQ122. Yes. A. Yes, sir.

XQ123. What was the height of the blocking at Rhinelander? A. About 14 inches, from ten to 14 inches.

XQ124. How much was the adjustment by the screw? A. Well, I don't know how much they could adjust that screw; I don't know exactly how much it was.

XQ125. Well, was the 14 inches entirely due to the blocking, or was some of it due to the adjustment by the screw? A. I think there was about six inches blocking—I am not certain on that point; I don't know how much blocking there was under that Fourdrinier. I never measured it.

XQ126. Let's have you best recollection; what part of the 14 inches was blocking and what part of it was screw adjustment? A. Well, I would suggest about six inches blocking; the rest was with the screw. I don't know if it was; I just suggest that.

XQ127. On the machine at Niagara was there any adjustable screw? A. No, sir.

XQ128. Blocking was put in to take the place of the adjustable screw? A. Yes, sir.

XQ129. Do you know what the purpose of that adjustable screw mechanism was? A. What makes?

XQ130. Pusey & Jones machines? A. Yes, sir.

XQ131. Do you know what the purpose of those adjustments at the breast-roll end of the machine, that some machines had, was? So that you could raise the wire a little above the level or drop it slightly below the level; what was the purpose of this? Did you ever hear of such an adjustment? A. I don't understand that question.

XQ132. Did you ever hear of a machine that had a screw adjustment such that you could raise the breast-roll of the machine slightly above the level or drop it slightly below the level? A. Before that at Rhinelander?

XQ133. Before you went to Rhinelander? A. There was no adjustable screws on the machines I worked on until I seen the one at Rhinelander.

XQ134. What kind of stock were they using at Niagara? A. They were using hemlock and spruce.

XQ135. Is that a quick stock? A. Did you say "thick"?

XQ136. Quick. A. You can make it quick and make it slow.

XQ137. How were you using it, quick or slow? A. Well, when it was quick, you couldn't run it; when it was slow, you couldn't run it. So you had to get it on a normal basis.

XQ138. Did you measure those blocks at Niagara? A. Yes, sir.

XQ139. Have you got any memorandum about it? A. Any memorandum how much they were?

XQ140. Yes. A. Six inches.

XQ141. Have you any memorandum of it? A. No, sir.

XQ142. That is what? A. That is what I remember; I didn't know, or I would have put it down on paper.

XQ143. You feel pretty sure of that? A. Yes, sir.

XQ144. Six inches rather than 12 inches? A. Six inches.

XQ145. Not four inches? A. No sir.

XQ146. How do you happen to remember that more distinctly than you remember the blocking at Rhinelander? A. Because I was there when they raised that Fourdrinier at Niagara, and I wasn't at Rhinelander.

XQ147. Is this man Ludwig dead? A. I don't know.

XQ148. Who is Mike Ludwig? A. Mike?

XQ149. Yes. A. I was acquainted with him, but I don't know whether he is any relation to the other Ludwig that was superintendent there.

XQ150. Where does Mike come from? A. I think from the Fox River Valley.

XQ151. Where is he now? A. Now, I ain't heard of him since I left Niagara. I don't know where he is.

XQ152. I am talking about Mike. A. I was acquainted with him; I said I was acquainted with him.

XQ153. Did he work at Niagara? A. No, sir, he was there at Niagara.

XQ154. Didn't he work at Niagara? A. Not that I remember of.

XQ155. What did he do at Niagara? A. He was around town there.

XQ156. You don't know where he is now? A. I don't know.

XQ157. Tell us again what your different jobs were at Niagara? A. Different jobs?

XQ158. Yes. A. At third-hand.

XQ159. Yes, you started as third-hand? A. Yes, sir.

XQ160. How old were you then? A. I was 24 years old.

XQ161. How long did you stay there as third hand? A. In the neighborhood of three months.

XQ162. What year was that? A. 1901.

XQ163. You were not 24 years old in 1901, were you? A. I wasn't?

XQ164. Were you? A. Yes, sir.

XQ165. How long did you stay as back-tender? A. I don't remember how long that was; in fact I don't know. I know it wasn't—it was probably a year, a year and a half; I couldn't say exactly.

XQ166. How long did you work as spare-hand? A. About a year and a half, probably a year and eight months.

XQ167. Do you know what the purpose was for which they put the six inch blocking under those machines at Niagara? A. To try to form the sheet better than what it was.

XQ168. To get it at the proper consistency at the dandy-roll? A. It didn't get down to the dandy-roll; about four feet before you get to the dandy-roll.

XQ169. What gets four feet before you get to the dandy-roll? A. The sheet breaks near the water before it gets there.

XQ170. I don't quite see what you mean by the sheet breaks? A. The water.

XQ171. The water leaves it? A. The speed.

XQ172. What do you mean by "the sheet breaks four feet from the dandy-roll"? A. You asked me the question, what was the purpose of the six-inch pitch, and I says to form the sheet; and the question then was, when the sheet gets down about four feet from the dandy-roll—when you mentioned the dandy-roll, I said the sheet broke—the speed of the wire makes the sheet break. The water settles about four feet before it gets to the dandy-roll.

XQ173. The water leaves the sheet? A. It penetrates through the wire.

XQ174. And that happens four feet before you get to the dandy-roll? A. Yes, sir.

XQ175. What did this six-inch pitch have to do with that? A. It rushed the water down to the dandy-roll—the high speed of the wire.

XQ176. So as to get it drained properly at the dandy-roll? A. To help drain the water.

XQ177. As spare-hand, what did you have to do on that machine? A. Well, we had to take up the cores—roll cores; the core of a roll, and put on the clothing on the paper machine.

XQ178. When did you begin to run those paper machines there? A. In 1905.

XQ179. Which machine did you run? A. No. 2.

XQ180. Did you ever run No. 1? A. Oh, I did a couple of days; I was on No. 2 right along.

XQ181. Before this blocking was put in, did that wire run up hill or on a level? A. On the level.

By consent of counsel signature waived.

Adjourned until ten o'clock Saturday morning.

Saturday, May 26th, 1917; ten o'clock a. m.

CARL F. BEYERL,

a witness called on behalf of the defendant, being first duly sworn, deposes and says, in answer to questions by Mr. Paul, as follows:

Q1. Please state your name, your age, and place of residence? A. My name is Carl F. Beyerl, my age is 41, and my residence is International Falls, Minnesota.

Q2. What is your present employment? A. I am assistant to the general manager and vice president of the Minnesota & Ontario Power Company.

Q3. What is your profession? A. Pulp and paper-maker, or pulp and paper mill engineer.

Q4. How long have you been familiar with the art of paper-making? A. Since about 1895.

Q5. When and where did you have your first experience in any paper mill? A. In Germany.

Q6. Where were you born? A. In Austria.

Q7. What were the circumstances under which you had your first experience in a paper mill? A. I was working in the mill.

Q8. Well, state the circumstances, how you came to be working there, and whose mill it was? A. Therbach-Saxon. I came to be working there through my father with the Therbach & Saxon.

Q9. Was your father associated in the management? A. No, he was associated in the mill there; he didn't have the management.

Q10. Associated in the ownership? A. Associated in the ownership, stocks, something like that.

Q11. Since 1895 what has been your active employment? A. Since 1895 I have been in eight different paper mills since then.

Q12. Were any of these paper mills in Europe? A. Yes.

Q13. What, in a general way, was the character of the mills which you were connected with in Europe? A. One of them was quite a big mill; they had six machines.

Q14. Were those what are known as Fourdriniers? A. Fourdrinier machines.

Q15. What did you do in those mills in which you were employed in Europe? A. I was working as—at various jobs on the mill.

Q16. Did you run any paper machines? A. No, I didn't run a machine.

Q17. Were you familiar with the construction of the machines there employed? A. Yes, sir.

Q18. When did you come to this country? A. 1898.

Q19. What has been your connection with paper mills in this country? A. My first connection in this country was, mill-hand, you may call it, at Erie, while the mill was under construction; various jobs there.

Q20. Since that time, what have you been doing? A. I have been associated with a mill in Massachusetts, in 1910, and in 1913 I was in Hamilton, Ohio, and also was associated with a mill at Hinckley, New York. In 1914 I rebuilt a mill at Potsdam, and in 1916 I was engaged with the Minnesota & Ontario Power Company to build a sulphate mill, which mill is practically completed now.

Q21. That is a mill being built at International Falls? A. Yes; I merely wanted to show for what purpose I went up there.

Q22. What was the first mill you were connected with after you came to this country? A. The Erie.

Q23. What was the name of that mill? A. The Hammermill.

Q24. How long were you connected with this Erie mill? A.

I was with the mill from 1898 to 1913, with the exception from 1910 to 1913 I was also associated with the other mill. I really ceased to be there 1912 some time, but I still made my headquarters there.

Q25. Then from the day that you were first connected with the Erie mill up to— A. (Interrupting) Up to and including December, 1910.

Q26. And after that your headquarters were with that mill, and you spent part of your time in their place? A. Yes, sir.

Q27. How many mills have you had charge of building and rebuilding? A. Three of them directly.

Q28. That is all since 1910? A. That is all since 1910.

Q29. Where are those mills located? A. Hamilton, Ohio, Potsdam, New York, and this one at International Falls. Also done some rebuilding in Hinckley, New York.

Q30. What work did you do in the Erie mill, prior to 1910? A. You mean at 1910?

Q31. Between the time you went there and 1910? A. I done everything from common labor to managing. In 1903 I was assistant to the president, and 1906 I was sales manager and secretary.

Q32. You began as a laborer in 1898? A. Yes, sir.

Q33. How soon did you get to doing other kinds of work? A. Shortly after the mill was started, in 1899.

Q34. What was the first work you did in the mill? A. I was working on beaters; and then on paper machines.

Q35. Did you run a paper machine? A. No, I was working on a Yankee machine; I was back-tender.

Q36. Did you, at any time, run a paper machine there? A. No, I never actually had charge of a paper machine.

Q37. Are you familiar with the operation of the machine? A. Yes, sir.

Q38. How long did you continue active work in the paper mill? A. Until about 1901.

Q39. After that, where did your duties take you? A. In the office.

Q40. Were you familiar with the operation of the machines in the mill, subsequent to 1901? A. Yes, sir, I seen and inspected those machines every day.

Q41. Do you understand the construction of the paper-making machines? A. Yes, sir.

Q42. And the various machines that are used in connection with the Fourdrinier part of the machines? A. I do, sir.

Q43. Are you familiar with mechanical drawings? A. Yes.

Q44. And do you understand drawings of letters patent so you can understand the construction of machines from such drawings? A. I do.

Q45. Are you familiar with the construction and operation of the Fourdrinier machines in the defendant's mill at International Falls? A. I am.

Q46. How long have you been familiar with those machines? A. Since July last year.

Q47. Have you examined the drawings of the patent to Savery, 742,239, and do you understand that? A. Yes, sir.

Q48. Will you compare the drawings of this Savery patent with the defendant's machines in the mill at International Falls, and state whether or not these drawings substantially represent the defendant's said machines? A. The general construction of this machine is identical with those machines at International Falls, with the exception there is only two stands here and there are three of them up there.

Q49. Two standards for what? A. For the save-all boxes.

Q50. The drawings of the patent show two standards for supporting the save-all boxes, and in the machine three standards are used for that purpose? A. Yes, sir.

Q51. Otherwise do these drawings substantially represent the defendant's machines? A. They do.

Q52. At the time you went to International Falls, how were the defendant's machines supported; what means were employed to support the machines? A. The Fourdrinier part?

Q53. Yes, the Fourdrinier part? A. The Fourdrinier part is supported by blocks and standards.

Q54. How were these blocks arranged? A. There is five blocks, and the first one nearest the breast-roll is inclined or declined—

Mr. Lyman: Tapered, you mean?

The Witness: Tapered.

Q55. Do you recall the size of those first blocks under the standards nearest the breast-roll? A. 13½ inches.

Q56. What about the other blocks, the blocks under the other standards? A. The standards—the blocks underneath the standards carrying the save-all boxes, are square; the next one of them is tapered.

Q57. Then how many blocks are there? A. There are five.

Q58. Are there five? A. Yes.

Q59. I call your attention to a blue print, Exhibit A, and ask you to state whether that correctly represents the arrangement of the blocks under the standards of the defendant's machines, as they were at International Falls when you went there

in 1916? A. Yes, they do; that is the arrangement.

Q60. How many separate blocks are there as used? A. There are four separate blocks used, but five standards.

Q61. Does this drawing, Exhibit A, correctly represent the arrangement of those blocks? A. It does.

Q62. Was any change required in the construction of the defendant's machines to permit them to have their standards placed on the blocks as shown in the blue print, Exhibit A? A. There is no change in the machine itself.

Q63. As these machines were installed, were they capable of being adjusted vertically, or were they so arranged to remain in a permanent position on the blocking? A. Evidently arranged to stay there, where they were put.

Q64. What about them would indicate that they were arranged to stay where they were put? A. Solid iron blocks under them, and the whole construction indicates that they were put in that way and supposed to stay that way.

Q65. What about the piping and connections? A. The construction of those machines, the piping, the pipe water boxes, the screens, the shake-pipe, are all built right in the same level with the machine, so those would have to be all changed; but that isn't the machine itself.

Q66. Those would all have to be changed if any change was made in the level of the machines? A. Yes.

Q67. Have you been familiar with the operation of these machines since you have been there? A. Yes, sir.

Q68. Do you know at what speed the machines have been run? A. The machine has been running about 630.

Q69. That is the paper speed? A. That is the paper speed.

Q70. You mean 630 feet per minute? A. 630 feet per minute.

Q71. Has any change been made in the supports of any one of those machines since you have been there? A. No, sir, except one.

Q72. The question is, has any change been made in any of them? A. Yes, sir, it has.

Q73. What machine has had its supports changed? A. No. 2.

Q74. And when was that change made? A. April 8th.

Q75. 1917? A. 1917.

Q76. What change was made in the supports of this machine on April 8th, 1917? A. The original blocks were taken out and smaller blocks were put in.

Q77. What was the result in the position of the machine? A. The decline of the wire was changed about—to about 5¾

inches, between the breast-roll and the guide-roll.

Q78. You mean that the decline from the top of the breast-roll to the top of the guide-roll in the wire was then made to about 5¾ inches? A. Yes, sir.

Q79. Has that machine continued to operate? A. It has.

Q80. And at what speed? A. The same speed it went before, about 630.

Q81. What has been the production of this machine since the change? A. The production would be good.

Q82. I mean in comparison with its former production? A. In comparison with the average, it has been more than the former production. If you compare last month with the average during the last year, with the same machines, it has been more.

Q83. Have you looked up the records of the company to get the exact figures of the production of that machine before and since the change? A. I have, sir.

Q84. Can you produce the records that you refer to? A. Yes, sir. (Witness produces paper).

Q85. Are these the records? A. These are the records, showing the production of the No. 2 machine from April 1st, 1916, to March 31st, 1917.

Q86. Does it also show the production of No. 1? A. It also shows the production of No. 1.

Q87. For the same period? A. During the same period—machines of the same size.

Q88. What else have you there? A. I also have the records here of the production of No. 2 machine since the change was made, on April 8th, showing the average during April and the average during May, so far.

Q89. Does it also show the production for each day it was run during those months? A. It shows the production for each day, with two days here part of the machine was down, on account of the lack of stock.

Q90. This first paper you produce shows the average daily production of the No. 1 and No. 2 machines, for the period from April 1st, 1916, to March 31st, 1917? A. It does, yes, sir.

Mr. Paul: I will ask to have this record marked, for identification, Defendant's Exhibit G.

Q91. And the other paper shows the production of No. 2 machine only for April and May, down to and including May 22nd of this year? A. Yes, sir.

Mr. Paul: I will ask to have this marked, for identification, Defendant's Exhibit H.

Q92. Are you familiar with the records produced yesterday by Mr. Devine, marked Defendant's Exhibit F? A. Yes, sir,

I am familiar with those figures.

Q93. What are these three sheets, marked Exhibit F? A. This sheet shows production for March, 1917, and this sheet shows production for April, 1917—our office records, which the office compiles and returned to the superintendent after the first of the month, shows corrected figures. This shows production for May, 1917—represents a record kept by the superintendent himself, which however, does not agree with the office record. There is always a slight discrepancy between his own figures and the office records.

Q94. How do you account for that discrepancy? You needn't put it in detail, but state in a general way. A. They have a check-weighing system. The figures in the office represent the actual amount of paper billed, invoiced; and Mr. Devine's figures represent the paper run over the machine; and there is a check between those two figures and we take the figures that are actually billed and shipped as production.

Q95. Then, as I understand you, the sheets produced by Mr. Devine for March and April have been checked by the office— A. Yes.

Q95. (Continuing)—while the figures produced for May, or a portion of May, have not been checked? A. No.

Q96. Now, in the sheet produced by you, marked Exhibit H, where you have given the figures for the No. 2 machine for April 9th to May 22nd, are these figures that haven't been checked by the office? A. Which have been checked.

Q97. And would that account for any discrepancy between your figures for May and Mr. Devine's figures for May? A. It would.

Q98. Now, referring to Exhibit G, will you please state the average daily production in tons of the No. 1 machine, for the year ending March 31st, 1917? A. 51.571 tons.

Q99. And what is the production of machine No. 2 for the same period? A. 50.865 tons.

Q100. What is the daily production of the No. 2 machine, for the days in April, after the change? A. 51.723 tons.

Q101. And for the 19 days of which you have the record for May? A. 52.309 tons.

Q102. Now, do you understand that the No. 2 machine is running at the same speed since the change that it was run before? A. It is.

Q103. Have you observed the operation of the machines since the change? A. Yes, sir, I have.

Q104. This machine appears to have run only part of the time on the 13th and 14th of April, and to have been shut down

on the 20th and 21st. Will you explain this fact? A. During a part of the week, beginning April 12th we were short of raw stock and water, and we had to kind of let up in the production.

Q105. What about the shut down on the 20th and 21st of April? A. It was for the same reason.

Q106. Those shut-downs weren't occasioned by any break-down of the machine? A. No, sir.

Q107. Has there been any difference in the operation of this machine since the change? A. No.

Q108. What about the head carried in the flow-box; has there been any change in that? A. Not to amount to anything.

Q109. And what about the amount of water in the stock? A. I understand that a little more water has been added in the chest, but how much, I can't say; I couldn't determine that.

Q110. Do you know about how much? A. No, I couldn't determine that.

Q111. Have you examined the paper that has been made on this machine since the change? A. I have.

Q112. Have you any sample of that paper here? A. Yes, there are several samples in your possession.

Q113. Well, is there any sample that you can identify as one having been taken by yourself at any particular time? A. I can, sir. I marked numbers on them, taken from different machines at the same time.

Q114. What other machine did you take a sample from and mark it? A. From machine No. 4.

Q115. And can you produce a sample from machine No. 2 and a sample from machine No. 4, taken at the same time? A. I can, sir. (Witness produces samples of paper.)

Q116. Are these the samples you refer to? A. Yes, sir, those are the samples taken from the machines, May 4th.

Q117. May 4th, 1917? A. May 4th, 1917, at two p. m.

Q118. Did you mark them at that time? A. I did.

Mr. Paul: The samples produced by the witness from machine No. 2 is marked, for identification, Defendant's Exhibit I, and the sample produced from machine No. 4 is marked Defendant's Exhibit J.

Q119. Was there any particular reason for taking a sample from No. 4, rather than from No. 1 or No. 3? A. No, it just happened I was there when they changed rolls, and I took the sample.

Q120. Has the paper from the No. 2 machine been sold in the regular way with the paper from the other machines, since this change was made? A. Yes, sir.

Q121. Gone out the same as the other paper? A. The same,

in the same contracts.

Q122. Has there been any objection made to any of the paper from the No. 2 machine? A. No, sir

Q123. Would you say that there is or is not any substantial difference between these two samples of paper, the paper made on the No. 2 machine and the paper made on the No. 4 machine? A. There is no substantial difference.

Q124. Can you notice any difference at all in an inspection of the paper? A. Those two sheets look alike to me.

Q125. Since you have been familiar with Fourdrinier machines please state whether it has or has not been customary to provide means for driving the machines a pitch or decline to the making-wire?

Mr. Lyman: The question is objected to, because there is no foundation in the answer for reference to any prior condition of the art, except certain specific instances therein set forth.

A. I have been familiar with the idea and know of it, that there has been a device for raising the breast-end part of a Fourdrinier machine.

Q126. How long have you been familiar with the Fourdrinier machines having means for giving an incline or pitch to the making-wire?

Mr. Lyman: Same objection.

A. Since about 1900.

Q127. When you first became familiar with the Fourdrinier machines, at about what speed was it customary to run the making-wire; and if different speeds were employed in reference to different kinds of paper, please explain the custom in reference thereto. A. When I first got acquainted with paper machines, it was in a mill where they made different grades of paper; some machines run fast and some run slow; some of them about 75 feet, and some of them went faster.

Q128. What was the relation between the speed of the machines and the kind of paper, if any, being made? A. On print paper or news, the speed has always been higher than on ledger, bond or book papers.

Q129. What different positions have been used for the making-wire in the operation of the Fourdrinier machines, in the early period of your acquaintance with such machines?

Mr. Lyman: Objected to as having no basis or anything in the answer; and it is stipulated that this objection may be applied to all further questions along this line, without further repetition.

A. Both running the machines on the level, and running them raised, with a pitch towards the couch-roll.

Q130. What means are you familiar with that were provided on such machines for giving the pitch towards the couch-roll? A. The device of raising it by screws and blocks.

Q131. In the early days of your familiarity with Fourdrinier machines, what was the general lengths of making-wires employed in such machines? A. Oh, around 30, 40, 50 feet.

Q132. For the entire length of the wire? A. For the entire length of the wire.

Q133. And what is the length of the wire employed in the defendant's machines, and machines of that character, at the present day? A. 70 feet.

Q134. In the operation of the Fourdrinier machines in the early days of your familiarity therewith, what amount of elevation was given to the breast-roll portion of the machine to produce the pitch towards the couch-roll that you have spoken of? A. From one to two inches.

Q135. And how was that amount of pitch obtained? A. By a screw device.

Q136. What was the length of the wire with which a two-inch pitch was used? A. 55 feet.

Q137. Assuming that you have two inches of elevation in a machine having a 40-foot wire, how much elevation would be required in a machine having 70-foot wire to get the same angle of decline or pitch from the breast-roll to the couch—about how much? A. Oh, about twice as much.

Q138. Then if a machine were used with a 40-foot wire, having a two-inch elevation at the breast-roll, and you substituted a machine having a 70-foot wire, and you wanted to get the same pitch or incline, how much would you have to elevate the breast-roll to do it; about how much? You needn't go into exact figures. A. If the machine is built in the same proportion, you would have to have three and one-half inches.

Q139. Will you mention any specific instance with which you were familiar, prior to 1905, of a pitch being given to the wire of a Fourdrinier machine by means of a screw device, such as you have referred to? A. No. 2 machine at Erie was pitched, in 1901, two inches; in 1904 or 1905, somewhere around there, the Moore & White machines, at West Carrollton, Ohio, had a device for pitching them, and they also were pitched; in 1903, December, 1903, and the spring following, there was machines of the Champion Coated Paper Company, at Hamilton, which were pitched. In 1902, the middle of June, I visited a mill in Niagara Falls, New York, which had a substantial pitch. In 1905, at the latest, the early part of 1906, I was at the Kimberly, Wisconsin, mill, and those machines were pitched.

Q140. Now, were all of the machines you have mentioned pitched by means of a screw device, or some blocks? A. Some had blocks.

Q141. My former question was intended to inquire about the machines having a screw device for pitching them. I will now direct your attention to these different machines, and ask you to testify more particularly in reference to them. The first machine you mentioned, I think was at Erie, Pennsylvania? A. Yes.

Q142. What was the date that you referred to in that machine? A. It was 1901.

Q143. Were you employed at that mill at that time? A. Yes, sir.

Q144. Was that the mill of the Hammermill Paper Company? A. Yes, sir.

Q145. How many machines did they have at that time? A. Two.

Q146. When you first became familiar with them, how were they being run? A. Flat.

Q147. And what change was made in reference to the wire? A. The breast-roll end was raised by means of a screw.

Q148. How much was the breast-roll end of that machine elevated up? A. About two inches.

Q149. The other machines remained flat? A. For a short time afterwards; and then the other machine was raised up on blocks; after that.

Q150. Now, when those machines were running flat, at what speed were they being run; about what speed? A. Depending on the grade of paper. We made various grades of paper; we were running those days about 250 feet.

Q151. When that one machine had the breast-roll raised two inches, what was done with reference to the speed, if anything? A. The speed was increased.

Q152. Were these machines known by number? A. Yes.

Q153. Which machine was it that was raised first? A. No. 2.

Q154. Was it the No. 2 machine that had its speed increased first? A. Yes, sir.

Q155. What was the effect on the production of raising of the breast-roll of this machine and increasing the speed? A. A higher production.

Q156. About how much? A. About a ton.

Q157. Every day? A. 24 hours.

Q158. What kind of paper were you making on that machine? A. Making manilas, fibres, writings, cheap, so-called

sulphite bonds.

Q159. What was the length of the wire on this No. 2 machine? A. 55 feet.

Q160. Can you tell how much the speed of that machine was increased after the wire was raised? About how much? A. Enough to make a ton a day difference in the production. I don't remember just how much it was, what the speed was raised.

Q161. How did the raising of the wire on this No. 2 machine at Erie enable you to run the machines faster and increase the production, as you have stated? A. By raising the wire, we obtained an equal, very close sheet at a higher speed than we did previously with a lower speed.

Q162. To get the same sheet with the wire level, could you run the machine as fast as you could after it was elevated? A. We could get the same sheet after the machine was elevated running faster, than we did running slower.

Q163. To get the same sheet with the machine running level, you had to run slower than when it was elevated? A. Yes, sir.

Q164. And how long did you run the No. 2 machine before you elevated the wire of the No. 1? A. I couldn't tell.

Q165. Any material length of time? A. No; those machines were all changed later on, but I couldn't tell when it was.

Q166. When did you raise the No. 1 machine two inches, to correspond with the No. 2? A. I couldn't say; it was some time afterwards.

Q167. Was there any change in the machine necessary in order to elevate that wire two inches? Or was there provision on the machine for doing it? A. There was a provision on the machine for doing it.

Q168. Do you know what type of elevating device on this machine? A. The Moore & White.

Q169. Are you familiar with the general construction of the Moore & White device? A. I am familiar with the construction for the Fourdrinier part.

Q170. I call your attention to drawings of the Moore & White patent, 684,081, and particularly to the drawings of the adjusting device of the breast-roll end of the machine, and ask you to state whether these drawings correctly represent the adjusting device which was used—which you say was employed on the Hammermill machines? A. The device indicated in this patent here is substantially the same as was used on that machine.

Q171. Was any further elevation given to those machines in the Hammermill plant, other than the two inches to which you

have referred? A. Yes, there was.

Q172. What additional elevation, if any, was given to the machines and when? A. To my best recollection, in 1906 the machines were all raised; by that time we had three machines.

Q173. How were they raised? A. By blocks.

Q174. How much? A. About, around five inches; I mean the total at that time was about five inches.

Q175. Do you know how much the machines could be raised by means of the screw device that they had on them? A. My recollection is it provides for four inches up or down.

Q176. Now, when those machines were raised to five inches, at what speed were they run? A. Depending on the grade of paper and the weight of the paper that was made. I have seen No. 3 machine running 525 feet per minute.

Q177. And that was at what elevation? A. Somewhere around five inches; I don't know the exact.

Q178. Which machine was that? A. No. 3.

Q179. Did it make a good grade of paper at that speed and elevation? A. It did.

Q180. What was the character of the paper? A. Light weight bleached sulphite paper.

Mr. Lyman: Was that news?

The Witness: No; of much greater value than news.

Q181. What was that paper used for? A. For writing purposes.

Q182. You spoke of machines at West Carrollton, Ohio. What was the name of the company there? A. In those days, it was the Friend Paper Company.

Q183. When was that you saw the machines in that mill, to which you referred? A. Somewhere around 1904.

Q184. What was the character of the adjustment used on those machines? A. The machines were identically the same as No. 2 machine in the Hammermill plant.

Q185. Have the same adjusting device? A. Had the same adjusting device.

Q186. What was the length of the wire, if you remember? A. I couldn't tell you.

Q187. How often did you see the machine in that mill? A. Several times; I have been in the mill a couple of times.

Q188. Do you know at what speed the machines were being operated? A. No, I couldn't tell you.

Q189. Was any elevation given to the wire, the breast-roll end of the wire on that machine? A. My recollection is there was an elevation to one of the machines.

Q190. How much elevation? A. I couldn't tell how much it was.

Q191. What was the character of the paper that was being made on that machine? A. Making bag papers and specialties at that time.

Q192. Now, referring to the machine of the Champion Coated Paper Company plant, at Hamilton, Ohio. What means was employed there for elevating the breast-roll end of the machine? A. It is my recollection they employed a Kutter device.

Q193. What was the character of that device? A. A device for raising and lowering the breast-roll end.

Q194. How was it constructed? A. Screw device; by means of screws.

Q195. What elevation was given to the breast-roll end of the machine? A. About three inches.

Q196. When did you see those machines? A. In 1904.

Q197. How often did you see them? A. Twice, I think, at that time.

Q198. You saw them when you were in the mill? A. Yes, I visited those mills.

Q199. You were not employed there? A. No, sir.

Q200. And you were never employed at the Friend Paper Company? A. No, sir.

Q201. But you saw those machines on visits to the mills? A. On visits, yes.

Q202. Now, referring to the mill at Niagara Falls; what was the name of that mill? A. It was practically the International Paper Company.

Q203. And when did you see that? A. In June, 1902.

Q204. How are you able to fix the time? A. I was married in June, 1902, and it was on my wedding trip.

Q205. And you visited Niagara Falls, did you? A. Yes, sir.

Q206. Did you go to this mill at that time? A. I did, sir.

Q207. As a visitor to the paper mill? A. I visited several paper mills at Niagara Falls.

Q208. Now, explain what you saw as a means for supporting the machines in the mill of the International Paper Company, at that time? A. The breast-end part of the Fourdrinier was raised up.

Q209. How was it raised? A. By means of blocks.

Q210. Where were those blocks placed? A. Under those standards.

Q211. And what effect did that have on the wire? A. It

tilted the wire towards the couch-roll.

Q212. And what was the size of these blocks? A. I should say about six inches.

Q213. Did you measure the blocks? A. I did not.

Q214. Did you examine—see the machines in operation? A. I did.

Q215. Were these blocks used under more than one machine at that time? A. I particularly noticed one machine, a new machine they had at that time.

Q216. Do you know at what speed the machine was being run? A. I only could answer that from what they told me.

Q217. You didn't test it yourself? A. No.

Q218. And what kind of paper was being made on the machine at that time? A. News.

Q219. Could you say from your examination of the machine, that it was being run at a fairly high speed? A. My recollection is that the machines all ran about, around 400-450.

Q220. But you had no exact information as to the speed at that time? A. No, sir.

Q221. Was the machine doing good work? A. They were running very good.

Q222. How long were you there in that mill at that time? A. Oh, just a little while; just to visit there, that is all.

Q223. Do you recall what the arrangement was in reference to the suction-boxes on that machine? A. The suction-boxes were flat, if I remember right.

Q224. The breast-roll end was elevated four inches; and how were the suction-boxes? A. The same as in an ordinary machine.

Q225. They hadn't been tilted? A. Not to my recollection.

Q226. Are you clear upon that point? A. I am not; I didn't pay any particular attention to it.

Q227. I will draw your attention to the mill at Kimberly—the machines in the mill at Kimberly, Wisconsin, that you have referred to. What was the name of that mill? A. It is the Kimberly mill, owned by the Kimberly & Clark Company.

Q228. What was the arrangement of the wire in those machines you saw at the Kimberly & Clark mill? A. The Fourdrinier part near the breast-roll was raised.

Q229. How much? A. I didn't measure it.

Q230. Can you judge? A. I should judge about six inches; somewhere around there.

Q231. What was the construction which permitted this arrangement of the Fourdrinier part of the machine? A. My recollection is there was a screw on it.

Q232. And what kind of a screw device? A. Similar to the one Moore & White used.

Q233. Similar to that used by the Hammermill mill? A. Yes, similar style.

Q234. Do you know what kind of paper was being made at that time? A. They made news; a very cheap grade of specialties, I think.

Q235. Do you remember what was being made at that time? A. Newspaper, I am quite sure.

Q236. Are you able to fix the exact time when you saw those machines? A. It was shortly after they started.

Q237. After the mill started? A. After the mill started.

Q238. But you are not able to fix the date? A. I am unable to fix the date, but it was very shortly after it started. It was a new mill, and I was interested to see it.

Q239. How many machines did you see? A. I seen two machines.

Q240. Were they both alike? A. I think both alike.

Q241. Did they have the same elevation, both of them? A. Yes, my recollection is they had the same elevation.

Q242. Getting back to those machines at Erie. What was the greatest speed at which any one of those machines was run at any time while you were there? A. 525.

Q243. And what machine was that? A. No. 3.

Q244. And what kind of material was it operating 525 on? A. Bleached sulphite papers.

Q245. What amount of pitch did it have? A. Four inches.

Q246. That pitch was given to it by the screw device you referred to? A. No, blocked up.

Q247. When was it that it was run at 525 feet? A. 1913.

Q248. Four years ago? A. Yes, four years ago.

Q249. That was with a four-inch pitch? A. Approximately.

Q250. And obtained by blocks? A. Yes, sir.

Q251. Now, these various Fourdrinier machines with which you are familiar, including those used by the defendant—are the suction-boxes themselves capable of any adjustment to vary their relation to the making-wire? A. You can vary the relation to the making-wire.

Q252. How could you do that? A. By either blocking it up from underneath or taking it up near the wire itself by using small blocks or washers.

Q253. How are those boxes supported ordinarily in machines of this kind; to what are they attached? A. To the rail, to a stand ordinarily they are attached, from down below.

Q254. Are those rails in continuous line with the shake-

rails? A. That is the rails I referred to.

Q255. The rails to which the suction-boxes are attached, are in continuous line with the shake-rails? A. Yes.

Q256. Do those rails shake, too? A. Not very much; it is split right in the center near the suction-boxes and from there it can't shake very much; and further towards the couch-roll, it is practically quiet.

Q257. And these suction-boxes are attached to the side-rails back of the joint, are they? A. Yes.

Q258. And it is the part in front of the joint that has the side motion? A. Yes, towards the breast-roll.

Q259. Now, what I want to get at is, are these portions of the side-rails that are back of the joint, or on the couch-rail side of the joint, and which carry the suction-boxes, are those capable of being raised? A. Do you mean the entire part of the rail?

Q260. Either the entire part or either end? A. You can raise the entire part of it.

Q261. How are those portions of the rails supported in the machine; what holds them up in position? A. Screws.

Q262. And those screws go into what? What do these screws secure the rails to? A. The suction-boxes.

Q263. I am speaking of the means of supporting the rails themselves; how are those rails supported? Can you refer to the drawing or blue print? A. I don't know exactly what you mean.

Q264. You have some rails here, as I understand it, in this blue print, to which the suction-boxes are secured? A. Yes.

Q265. What are those rails held by? A. By the standards.

Q266. And how are they held on the standards? A. By means of bolts.

Q267. Are those bolts removable? A. Yes, sir.

Q268. Can you change the angle or position of the rails by removing these bolts? A. You can by placing something underneath them.

Q269. You take out those bolts and put something under the rails and lift them up? A. Yes, sir.

Q270. And give them any angle you want? A. You can decline them one way or the other, by putting more one side that the other.

Q271. If these rails were moved and given an angle, what would be the effect on the suction-boxes, would they go with the rails? A. They would go with the rails.

Q272. Now, can you separately adjust the suction-boxes themselves, in reference to these rails or in reference to the making-wire? A. You can change the suction-boxes themselves

by placing something underneath the box; you can throw it forward, if you want to, towards the couch-roll.

Q273. And you can vary the plane or top of the box in that way, can you? A. Yes, sir. You could also plane down the suction-box cover itself.

Mr. Paul: The Moore & White patent, No. 684,081, is marked for identification Defendant's Exhibit K.

Afternoon session, May 26th, 1917, two o'clock.

Q274. You said, Mr. Beyerl, that in the Erie mill you gave the 55-foot making wire an elevation at the breast-roll of about two inches. Now, what was the purpose of that? A. The purpose of this was to increase the production.

Q275. How did it increase the production? A. By raising the wire near the breast-roll and getting a slant towards the guide-roll. The sheet, with the higher speed, will close better with the wire raised than it would on the level.

Q276. And what did that enable you to do, with reference to speed of the machines? A. That enabled us to increase the speed of the machine, and to make the same sheet of paper of the same formation at a higher speed than we did previously while running the wire on the level.

Q277. And did you actually do that with that machine? A. Yes, sir.

Q278. Did the raising of this wire two inches at the breast-roll end give that stock a gravity feed over the wire? A. It naturally did; it went down hill.

Q279. Now, that was a 55-foot wire, I think you said? A. Yes, sir, 55-foot wire.

Q280. What would that pitch be equivalent to, that is, how much elevation would you have to give to a 70-foot wire to get the same pitch that you had on that wire with a two-inch elevation? A. Not quite three inches.

Q281. That is about half the elevation you have on the No. 2 machine at International Falls? A. Just about, yes, sir.

Q282. Then the slant you had on that machine is about half as much as you have on the No. 2 machine at International Falls? A. In proportion to the size of the wire.

Q283. But the actual angles would be about half that? A. Measuring the length of the wire from the guide-roll towards the breast-roll, it would be.

Q284. Have there been other changes in the Fourdrinier machines or the devices that are used in connection with them in the last 15 or 20 years that contributed to the speed of such machines? A. Yes, there have been quite a few of them.

Q285. What are some of the changes that have been made?

A. Starting on the wet end of the machine, the screens have been changed to a great extent; more suction boxes have been put in; the use of suction-rolls has come in, which takes the place of a couch-roll, without the top couch-roll; more presses have been added; dryers have been made bigger; in some cases the air system has been installed to help the drying—blowing hot air in the dryers.

CROSS EXAMINATION.

By Mr. Lyman:

XQ286. How many employees are there in your mill at International Falls? A. About 850.

XQ287. Are they in the paper mill proper? A. Paper mill, ground mill, sulphate mill.

XQ288. Do you use in the paper mill all of the product of your sulphate, sulphite and ground-wood mills? A. The sulphate mill isn't finished yet and not in operation; the sulphite mill produces more sulphite than the mill uses. A lot of it goes to Canada, in the manufacture of news print, the Canada mill of the Fort Frances Pulp & Paper Company. The ground-wood, we just about make enough ground-wood to keep us going.

XQ289. How many employees are there in the paper mill proper at International Falls? A. If you refer merely to the machine room and beater room and finishing room, I have to guess at it. I couldn't tell you—somewhere around 250.

XQ290. Why did you make this change on the No. 2 machine from the 14-inch blocking to the 6-inch blocking? A. To try it out and see what it would do.

XQ291. Did you make any experiments at other heights than six inches before you tried that? A. No, we put it down from the original elevation to about 5¾ inches.

XQ292. Why did you want to try it out and see what it would do at that height? A. To try to find out if the machine would produce the same amount of paper that it did before.

XQ293. Are you planning to reduce the other machines similarly? A. I couldn't answer that question.

XQ294. Have you any objection to doing that? A. No, I have no objection to it, but that would be up to the president of our corporation. I am not the head of that corporation, to be in position to say what we would do.

XQ295. You think that that machine, with the 6-inch pitch, makes just as good paper as it did with the 14-inch pitch? A. That machine, the way it is running at the present time, with the smaller pitch, produces just as good commercial paper at the same value.

XQ296. Why do you use the word "commercial" in that an-

swer? A. The commercial value is whatever you get for your product in comparison with other mills.

XQ297. Well, is the paper that is produced on this No. 2 machine, as it is at present running, just as good in every way as that that is made on the No. 1 machine, or was made on the No. 2 machine when it had the 14-inch pitch? A. I can't see any decided difference in it.

XQ298. Well, what difference do you see? A. There has been at the start of that machine—the stock, just a little difference in the appearance of it, but not sufficient in my opinion to make any decided difference in the value or decided difference in the selling of it.

XQ299. Well, what difference in appearance does result? A. The difference in appearance I have seen is, sometimes it runs a little cloudy.

XQ300. What is that due to, that cloudiness? A. That may be due to a number of different things—lack of water is one of them. The sheet didn't close up as well, that makes the cloudiness.

XQ301. Why doesn't it close up as well when you are running at six inches as when you were running it at 14 inches? A. In general, it is closed up fairly good. As far as why it didn't, I couldn't explain why it didn't, unless I knew the condition of the machine at that very moment.

XQ302. Do you attribute the fact that the sheet doesn't close up as well now as it did before to the fact that the pitch has been reduced from 14 inches to six inches? A. I couldn't very well state it, because in my experience, I never made any trials or seen any trials made between those two limits.

XQ303. Can you tell from the appearance of the stock on the wire whether the sheet is going to be a heavier sheet or not; I mean does the smoothness and glossy appearance of the sheet on the wire mean a heavier paper? A. It does.

XQ304. When you find such smooth and glossy appearance on the wire, what does that mean? A. You get a good smooth surface, it means a good sheet.

XQ305. Does it also mean the stock is running at the same speed with the wire? A. That is a question I couldn't determine from the looks of it. I have never been able to determine nohow what the relative speed is in wire to stock.

XQ306. Now, on your machines with the 14-inch pitch, do you get that glossy appearance on the wire? A. They practically look alike.

XQ307. You mean the No. 2 machine looks like the No. 1, No. 3 and No. 4? A. I particularly noticed two and one, be

cause they are side by side; just have to turn around to look at one or the other. It moves more or less in jerks; sometimes it goes back a little farther, and then comes up; and it is very hard to determine.

XQ308. Do you get a good glossy sheet on both of them? A. We get a good sheet on both of them.

XQ309. On the wire, I mean, does it have that smooth appearance you like to get? A. I couldn't very well say that before it gets over the machine and you can look at it; before the stock gets over the machine. As far as the Fourdrinier is concerned, it seems to me it is just about the same as it was before. The appearance of the sheet is about the same; it might, however, be a trifle different.

XQ310. In what would that difference consist? A. The stock settling a little earlier than the other one.

XQ311. On which wire would it settle a little earlier? A. It might settle a little earlier on No. 2.

XQ312. On No. 2 than on No. 1, do you mean that? A. It is very little.

XQ313. You mean it settles a little earlier on the No. 2 than on the No. 1? A. Yes.

XQ314. A little earlier on the one with six-inch pitch than the one with 14-inch pitch? A. Yes, sir.

XQ315. Why do you put more water in the stock on No. 2 machine than No. 1 machine? A. I never run those machines; and Mr. Devine, as the superintendent, could probably judge a great deal closer. I only can tell from the appearance of it, when I walk past and look at it. However, by adding more water, you thin your stock out somewhat in the flow-boxes, and you have more water running over the machine.

XQ316. Is it an advantage or disadvantage to add that extra water? A. It seems to be an advantage in this case.

XQ317. You mean it helps the sheet in that case? A. I mean it helps the sheet in that case.

XQ318. I mean from the manufacturer's viewpoint is it a good thing to have to add that extra water, or is it a disadvantage? A. It don't make any difference.

XQ319. Haven't you been telling of lack of water up there? A. When I was talking about lack of water, I was talking about our hydraulic plant to produce it. That little water wouldn't amount to anything. In fact that water isn't used for making power; it is pumped up to the paper machines.

XQ320. Do you like to have the stock settle as early as possible on the wire? A. I couldn't answer that question myself; it depends somewhat on the stock; depends on the condition of

the material. The men that run the machines can determine that a great deal easier.

XQ321. Why wouldn't the machine run as well with a flat wire as with a six-inch pitch you now have? A. Because it helps to close up the sheet just as soon as you elevate that.

XQ322. Well, why wouldn't you get the same result by adding still more water and running it flat? A. There seems to be a limit to adding water to it.

XQ323. Why? A. On account of the flow of the stock, I imagine.

XQ324. How much speed could you get out of that machine, if you had the wire running flat, do you think? A. I am unable to state, because I never seen it run flat.

XQ325. Do you think that a skilled paper buyer, if he had those two samples you submitted this morning before him, would buy, with normal conditions of paper supply, would buy the stock made on the No. 2 machine just as soon as he would that made on the No. 4 machine? A. The two sheets I submitted this morning look so much alike that I don't think that anyone would have any objection to one or the other.

XQ326. Taking the product by and large, as it has been made on this machine since the change was made, and comparing it with the product by and large, the average product from the No. 1 machine, the No. 3 and the No. 4 machines, do you think that a skilled paper buyer would just as soon have the product from the No. 2 machine as he would that from the No. 1, or 3 and 4? A. I would myself.

XQ327. Well, how about an ordinary skilled paper buyer? A. I am not in position to say what he would do.

XQ328. What do you think about it; let's have your real judgment? A. It doesn't make any difference, as far as that is concerned, in my opinion.

XQ329. Whether or not it does in your opinion, do you or do you not think it would in the opinion of the purchaser of paper? A. I couldn't say. What you desire to know is, what the other fellow would do?

XQ330. Yes. A. I hardly could tell that.

XQ331. What was the rate of speed at which that No. 2 machine was running when you took that sample? A. 630.

XQ332. Did you try it that day? A. No, but those machines are not changed; they run all the time at the same speed.

XQ333. Is this sample of the No. 4 machine, the product of No. 4 machine, a fair sample of the quality of the paper that is offered to the trade by the Minnesota & Ontario Power Company, to its customers? A. That was a representative sample

made at that time.

XQ334. Was that fairly representative of what you have made there the last two or three years on your machines? A. I couldn't go back two or three years; I have only been there for a year. But it is about the same as it was a year ago when I came there.

XQ335. Is it no more cloudy than it was last year? A. The question as to cloudiness comes up very frequently, no matter how high you elevate your machines.

XQ336. Well, what causes the question of cloudiness to come up, providing you have a proper pitch? A. Well, I am not familiar enough with the running of those machines to be able to testify to that.

XQ337. You mean the paper produced varies from time to time as to its cloudiness, even though you have it run at the same speed and with the same pitch? A. Oh, yes, varies very frequently.

XQ338. And is this sample of the No. 4 machine that you produced a fair sample of the cloudiness of the usual product of the Minnesota & Ontario Power Co.? A. It looks to me like a fair sample of the paper that is made.

XQ339. On that No. 4 machine? A. On that No. 4 machine.

XQ340. You sometimes get a paper which is cloudier than that on the No. 4 machine? A. Yes, sometimes more cloudy.

XQ341. Is all the paper that has been made on the No. 2 as good as that sample you produced this morning, since the change was made? A. It is all the same. The sample I showed you this morning—in some cases it is a little better, and just as many cases, it is a little worse. I would consider it a fair average sample. The sample was taken at random.

XQ342. Now, you say there hasn't been any change in the head you carried on the No. 2 machine, head of the flow-boxes, accompanying this change in the pitch of the wire? A. The No. 1 machine runs just a trifle lower in the flow-boxes than the No. 2 does.

XQ343. You mean a couple of inches lower? A. No, about an inch.

XQ344. What is that; why do you run No. 2 with a higher head in the flow-boxes than the No. 1? A. That question really Mr. Devine can explain more to you than I can.

XQ345. Haven't you any idea? A. He has been experimenting and trying to carry a little higher head.

XQ346. Well, can't you give us any idea of the reason for it? A. Undoubtedly for hydraulic pressure.

XQ347. What has that got to do with it? A. Pushes the

stuff down much faster.

XQ348. What do you want to push it down faster for? A. To close up the sheet, I presume. I am not able to testify insofar as the head is concerned, as far as the sheet is concerned. In the first place, I never worked on those machines; the news end of it is a little strange to me.

XQ349. You mean the wet end of it? A. Making newspaper.

XQ350. Now, isn't it a fact that you can increase the speed of your paper by increasing the pitch of your wire? A. That is a matter of fact.

XQ351. Well, how then does it happen you can get as much speed on this No. 2 machine with six inches as you can with 14 inches? A. I presume that six inches will do the trick as well as 14.

XQ352. Well, I thought you said it was a fact that as you increased the pitch, you could increase the speed? A. To a certain degree.

XQ353. Well, do you mean—what is that degree? A. I couldn't tell you. My experience has only been up to about five or six inches. What it would do afterwards, I don't know.

XQ354. The speed of the stock on the wire must be—the acceleration of the stock on the wire must be greater with the 14-inch pitch than with 6-inch, mustn't it? A. That is something I couldn't determine.

XQ355. When you built these paper mills at Hamilton and Potsdam, what did you build, the machines or the mills? A. The mills; I didn't have anything to do with the machines; they are bought the same as any other piece of machinery.

XQ356. And the same is true of the work you did at Hinckley? A. That was a sulphite mill.

XQ357. When you say that the sheet settles on the wire, do you mean by that that the speed of the stock has come up to be equal with the speed of the wire? A. No, when I say it settles, I mean that it forms, that the sheet forms at that time.

XQ358. Forms? A. Forms.

XQ359. You mean that the water leaves it? A. The water leaves it, and the sheet forms in a sheet of paper.

XQ360. Is it desirable to have the speed of the stock and the speed of the wire identical at the point where the sheet forms, as you put it? A. I couldn't answer the question in the form you ask, because I don't know if the stock gets the same speed as the wire.

XQ361. Well, is it desirable to have the sheet smooth at the time the paper forms? A. It is desirable to have the pulp in

such condition that it will close up.

XQ362. That means free of waves and ripples? A. Free of undue whirling or commotion there.

XQ363. You don't know what that commotion is due to that you see on a wire at the early stages? A. It is due to the wire running under the stock.

XQ364. Well, is it due to any difference between the speed of the stock and the speed of the wire? A. Not in the closest end to the flow-boxes or slices.

XQ365. Well, how about waves and ripples down the wire 8 or 10 feet, do they indicate—what do they do to them when they are present? A. You mean as to what they are caused by?

XQ366. Yes. A. I couldn't tell you.

XQ367. Will the sheet close up well, as you put it, if there is a condition of commotion in the stock on the wire at the point where the paper is forming? A. The paper undoubtedly forms the moment it leaves the slices; how far down on the wire the formation takes place, that, I am unable to state.

XQ368. Do you have anything to do with the selling of paper? A. At one time, yes.

XQ369. Do you now? A. No.

XQ370. What kind of paper did you sell? A. High grade papers.

XQ371. Book— A. Book and bond papers.

XQ372. Have you ever sold newspaper? A. No.

XQ373. Are you charged with the responsibility of the product at International Falls? A. No, I am not; Mr. Devine is the superintendent.

XQ374. What is your work as assistant to the general manager and vice-president? A. I have to spend a great deal of my time in building the new mill; in looking after the manufacturing end of it here and there as superintendent or assistant to him.

XQ375. Aren't you getting a little outside of your province in attempting to pass upon these samples? A. That is my opinion; I have seen a great deal of paper.

XQ376. Isn't it a fact that the production at International Falls has been speeded up in the American factory on all of the machines for the last—within the last six months over what it was before that time? A. It has been speeded up a little.

XQ377. When was it speeded up? A. Somewhere around last December.

XQ378. How much of an increase in speed was there then? A. Oh, about five per cent.

XQ379. That applies to all the machines? A. I beg pardon.

XQ380. That applies to all the machines? A. It applied to all of them.

XQ381. In these production records that you produced, I notice that during April there were two or three days when the No. 2 machine didn't operate at all. And two or three other days when you say that it operated for only a portion of a day. A. Yes, sir.

XQ382. Why did you shut down the No. 2 machine those days, rather than the 1, 3 and 4? A. We had at that time shut two or three machines down.

XQ383. So they were all shut down at that time? A. That includes our Canadian mill.

XQ384. But that is the only one that was shut down in the American mill? A. No, I think 3 was shut down, too.

XQ385. Will you look at those records and say what days No. 3 was shut down? A. No, it wasn't No. 3; it doesn't indicate. That one shows the production for 24 hours.

XQ386. Well, apparently, Nos. 1, 3 and 4 were not shut down at all during that month then? A. I think No. 1 was closed down in the mill. It only shows a production of 48 tons in one day. It must have been taken off for a little while.

XQ387. For how long? A. I couldn't tell from here.

XQ388. What is the average production of No. 1 for a day? A. It doesn't show the average.

XQ389. Doesn't Exhibit G show the average of No. 1? A. That is for April.

XQ390. For March of the same year? A. For March it does, yes.

XQ391. There was 51 tons and a fraction? A. When?

XQ392. March. A. No, it doesn't; that is the average for the year.

XQ393. The average for the year from April, 1916, to March, 1917, on the No. 1 machine, was 51 tons per day, and a fraction? A. That's correct.

XQ394. Now, do you mean to say that the No. 1 machine was shut down that day that it got 48 tons? A. It is so much lower than the highest of them, that something happened to it. The same day, the other machine only made nine tons.

XQ395. Well, it wasn't shut down all day? A. No, I guess not.

XQ396. It wasn't shut down at all voluntarily? A. I couldn't tell. I know No. 5 was shut down—

XQ396. (Interrupting) Five is on the Canadian side? A. (Continuing)—for several days.

XQ397. Why was it when one of those machines was to be shut down several days in April, it was the No. 2 machine, rather than the others? A. I can't tell.

XQ398. What did you say was the reason for that shut-down? A. The Canadian Government forced us to open our gates, our waste-water gates, and the water below the dam, on account of the immense quantity of water that went down there, raised it up so high we couldn't run our generators to full capacity or our grinders to full capacity. Therefore we were short both raw materials and power. That condition really existed there for about seven or eight days before the whole thing adjusted itself to the former basis.

XQ399. Do you mean to say that the result of cutting down this pitch from 14 inches to six inches has been actually to enable you to increase the production on that machine? A. It has produced more paper.

XQ400. How do you explain that? A. There have been fewer breaks.

XQ401. Why should there be fewer breaks? A. It is a matter that I couldn't answer.

XQ402. Do you personally know of your own knowledge that the reason for the shut down on those days of this particular machine, was the lack of power? A. The lack of power and the lack of stuff.

XQ403. You personally know that? A. I do.

XQ404. You were there? A. I was there and watched it very closely. We got into a big argument with the Canadian Government.

XQ405. When was this experimentation on the depth of the head in the flow-boxes carried on by Mr. Devine? A. I believe it was the first day he run it, the ninth of April.

XQ406. These figures that you have produced here, were they compiled by you? A. The figures were written by an accountant in our office and I compared them.

XQ407. Compared them with the records? A. The records that come in from the mill.

XQ408. In what form are they? A. This form here.

XQ409. Referring to Exhibit F? A. Yes, sir.

XQ410. Did you keep those records? A. No, sir.

XQ411. Did you take any other samples from the No. 2 machine at any time except this one you have produced? A. I have taken samples from the No. 2 machine a number of times.

XQ412. Since the change was made? A. Yes, and before.

XQ413. What have you done with the samples that were taken at various times since the change was made? A. Looked

at them; threw them away.

XQ414. How many did you take with the thought of producing them in this case? A. I beg pardon.

XQ415. How many samples from No. 2 machine did you take with the thought of producing them for use in this case? A. Just this one.

XQ416. That sample was taken on May 4th, 1917, for the purpose of producing it in this case? A. That sample was taken on May 4th, in the afternoon, and looked at and written on here, and then it was mailed—I gave it to Mr. Paul.

XQ417. Was Mr. Paul there that day? A. Yes, sir.

XQ418. Have you taken any other samples on any other day in his presence? A. I think yes, I took one sample off the roll while Mr. Paul was there, after it came off the machine.

XQ419. Where is the sample? A. I don't know what became of it.

XQ420. What did you do with it? A. I didn't keep it; but I don't know whether Mr. Paul took it along or what happened to it.

XQ421. What day was that? A. I don't know whether it was the same day or the day before.

XQ422. You have told about a number of instances of machines where the breast-roll was raised above the level. Is it not a fact that prior to 1906, or thereabouts, the usual practice was to run with the wires level? A. Prior to 1906—in mills manufacturing book papers, writing papers, bond papers or specialties, fibers and manilas, some of those had the wires raised. Undoubtedly it was done to a greater extent in the news mills, which were more interested in that particular arrangement than the specialty mills.

XQ423. Well, what was the general practice? A. I am not talking about occasional instances where this adjustment was present; what was the general practice in those days, to run with the wires flat—I mean level? A. My best recollection is in quite a few they had them up.

XQ424. You are not answering my question. What was the general prevailing practice. I understand you named some cases where they were raised. Now I am asking you what the general practice was? A. I don't quite understand the question, as to the general practice. My knowledge of those was only confined to certain mills. What the other mills were doing at that time, mills that I didn't visit, I didn't see, and I am unable to state; but amongst mills that I visited, there were quite a few of them that used that.

XQ425. Well, isn't it perfectly certain that the bulk of them

were running with their wires level or else running up hill? A. I couldn't answer that question.

XQ426. Now, some of these instances where the wire was pitched, the pitch was accomplished by a screw device, you say? A. Yes.

XQ427. That screw device was arranged so that the wire could be raised a little above the level or dropped a little below? A. Yes, sir.

XQ427a. What was the purpose of the adjustment, as you understand it? A. The purpose of that adjustment was to raise the wire whenever you found it necessary to increase the pitch, depending entirely on different grades of paper that could be made with that machine. Some papers may want a higher pitch, some a lower pitch.

XQ428. Just what grades of paper want the higher pitch, and what the lower pitch? A. I presume very free stock is more adaptable to the higher pitch than the other grades.

XQ429. Why? A. Well, the stock—the water leaves it much slower—takes more space, the free. That's the only explanation I can give myself.

XQ430. You mean free stock, the water leaves it more rapidly? A. Yes.

XQ431. You mean with a free stock, you wanted to give the stock less time on the wire to drain, before it got down to the end of the wire? A. I mean you close your sheet much faster that way; that's what I meant.

XQ432. Can't you explain that a little more in detail? What difference, I mean, does it make whether the stock was free or not, as far as that adjustment was concerned? A. If the wire was pitched and ran down hill, so to obtain a certain momentum of its own force, it would help to give you more space for closing the sheet, because the water didn't leave it so quickly.

XQ433. Do you mean that there is a certain consistency of the stock when it reaches the dandy-roll, and if you have a free stock, it would get too dry at the dandy-roll, unless you gave it a pitch by this adjustment? A. I don't know if the dandy-roll has anything to do with it; it is a question of closing the sheet before it gets to the dandy.

XQ434. Well, the point was, you wanted to have the stock have a certain amount of moisture in it at a given point? A. Sure.

XQ435. And if you have a free stock, it would get down with too little water? A. That was the idea.

XQ436. When did you use the adjustment to make the wire

travel below? A. That adjustment is only used in slow stock; may be used in mills making parchment papers.

XQ437. The idea being there that you wanted to give the stock longer to dry on the wire, because it was slow stock? A. Yes, because it drained more slowly.

XQ438. Now, have you known of instances where the wire was run up hill as well as down hill? A. Yes, I know of one instance.

XQ439. Where was that? A. Nassau River Paper Corporation.

XQ440. Is that a large corporation? A. No, it is a separate corporation.

XQ441. The same people were interested as in the Hammermill mill? A. Yes, sir, some of the same people.

XQ442. Was there any difference in the purpose for which this blocking was put under these machines you have told about with the Hammermill plant from the purpose of those screw adjustments? A. The purpose is exactly the same.

XQ443. What was the purpose of the blocking at the Kimberly mill—was that the one you told about—the same? A. I presume it is the same purpose.

XQ444. Was the pitch at West Carrollton caused by a screw adjustment device, one of these screw adjustments? A. The West Carrollton machine—my recollection is, the same as No. 2 machine of the Erie.

XQ445. That is the pitch was due to Moore & White adjustment? A. Yes, Moore & White machines.

XQ446. And the Niagara Falls machines, your recollection is that was blocking? A. That was blocking.

XQ447. Presumably for the same purpose as these others? A. It was blocked for the purpose of obtaining a closed sheet at high speed.

XQ448. That is, it was substituted for the screw adjustment, which they didn't have on those machines, the screw adjustment such as they had on the Moore & White or Kutter machines, which they didn't have there? A. The purpose, or whether they preferred one thing from the other, I couldn't tell you.

XQ449. What I mean is, that it was their own means of getting this same result that the Moore & White adjustment would have given? A. It was the means of raising the wire for the purpose of making paper at a certain speed.

XQ450. Now this Hammermill machine—do I understand that the first pitched wire that you noticed there, had a two-inch downward pitch accomplished by means of a Moore &

White screw adjustment? A. Yes, sir.

XQ451. Did that adjustment also provide for running up hill two inches, if you wanted to? A. It is my recollection that most of those devices provide for up and down.

XQ452. Now, do you remember whether the Hammermill machine was ever run up hill by means of that adjustment? A. I am quite sure not.

XQ453. And when is your recollection that that two-inch downward pitch was used on that machine? A. In 1901.

XQ454. And how long did it continue to be used, according to your recollection? A. Oh, for a number of years.

XQ455. For how many years? A. I should judge four or five after that.

XQ456. Was that No. 1 machine ever changed while you were there? A. Yes, it was.

XQ457. How was it changed? A. Blocks were put under it.

XQ458. Those blocks brought the total pitch up four inches? A. Somewhere around four or five; I think nearer five inches.

XQ459. And that was in what year? A. I think in 1906.

XQ460. Now, do you know what the speed which that machine was run from 1901 to 1906 was? A. The speed of that machine varied a great deal, depending on the grades or weights of paper, and so on. That machine has run during the time, at one time 400 feet.

XQ461. What were the different speeds at which it ran with the different grades, if you cannot give an average? A. The machine itself had a variation of six to one.

XQ462. Six to one? A. Yes; in other words, 80 feet was the minimum speed; 480 would be the maximum.

XQ463. What grades of paper were made on that machine? A. Manilas, fibers, writings, bonds; everything you can make out of sulphite.

XQ464. When it was running on manilas, what speed would it have? A. About 300-350.

XQ465. When it was running on fibers, what speed? A. About the same.

XQ466. When it was running on sulphite? A. Lower speed.

XQ467. How much? A. Around those times, about 250-300.

XQ468. When it was running on writing paper, what did it have? A. About the same.

XQ469. On bond paper? A. About the same; the machine run on bonds up to 400.

XQ470. Did they ever make any change in that pitch, according to the speed they were running, or did the two-inch pitch stay? A. The two-inch pitch stayed; it took care of practically all of the papers we had of the same nature.

XQ471. Now, you say that wire was 55 feet long? A. Yes, 55 feet long.

XQ472. You said that a two-inch pitch for a 40-foot wire would correspond to about three and one-half inches on a 70-foot wire, if the machines were otherwise constructed in proportion. Now, would it be natural to otherwise construct in proportion? I mean to say, isn't the working portion—what is the length of the working portion of the Fourdrinier, 70-foot wire? A. About 28 feet.

XQ473. What would be the working portion of the Fourdrinier wire on a 40-foot wire? A. It would be about in proportion.

XQ474. It would be rather more, wouldn't it? A. I don't think so.

XQ475. Aren't the breast-rolls— A. The breast-rolls are smaller, the couch-rolls are smaller. Those old machines had quite a pitch from the guide-roll down to the couch, you know. It is almost impossible to say, without knowing just what machines you speak of.

XQ476. And the same is true of the 55-foot wire; without knowing what the machine is, you couldn't tell what the working length of it was? A. The newer type of machines are about the same proportion.

XQ477. As a matter of fact, it would be rather more than four-tenths, the working length of a Fourdrinier wire on the 55-foot wire would be? More than four-tenths of its whole length? A. No, I don't think so; I think it would be about in proportion to it. Maybe a trifle more on account of the larger couch-rolls and breast-rolls.

XQ478. Taking the 40-foot wire, wouldn't the working length of the Fourdrinier wire be rather more than four-tenths of its whole length? A. Maybe, just a little.

XQ479. Quite a good deal? A. I doubt it.

XQ480. What was the head carried in this flow-box in this Hammermill machine? A. I couldn't tell you that.

XQ481. Probably six inches? I don't ask for it accurately. A. It would be guessing at it.

XQ482. Well, let's have your best guess? One inch, three, four, five, six? A. Probably four or five inches.

XQ483. They usually carried more than that? Isn't it practicable to carry six or seven inches? A. Not in those mills.

The news mills carry quite a head on them. I don't think there was any six-inch head. Those machines have double slices, you know.

XQ484. Now the No. 2 machine at Hammermill; did that have a pitch, do I understand? A. No. 2?

XQ485. Yes. A. Yes.

XQ486. And when was that pitch put on? A. You just spoke about No. 2?

XQ487. I thought you spoke about No. 1? A. No, No. 2.

XQ488. Did the No. 1 machine at Hammermill have a pitch on? A. Yes.

XQ489. When was that put on? A. Some time after No. 2.

XQ490. You don't know when it was? A. I don't know.

XQ491. Was it after the pitch on the No. 2 had been raised to four inches, or before that time? A. It must have been about the time or before that.

XQ492. You don't know? A. I don't know exactly.

XQ493. Was that a two-inch pitch? A. It was a small pitch at first, and then it was raised again.

XQ494. Was it raised again at the same time that the pitch on the No. 2 was raised four inches? A. My recollection is, there were three machines raised all the same time, the last time they were raised.

XQ495. Did No. 1 machine have this Moore & White adjustment too? A. No, sir, No. 1 machine was a Pusey & Jones machine.

XQ496. And the pitch was given there by blocks? A. The pitch was given there by blocks.

XQ497. When did they get the No. 3 machine, do you know? A. No. 3 machine was running 1905 or 1906.

XQ498. You can't place it? A. No. 3 was a rebuilt machine; it was originally a sulphite machine, and then it was turned into a paper machine.

XQ499. You speak about the pitch on the No. 2 machine at International Falls as being now 5¾ inches. Mr. Barlow's measurements, as shown on Exhibit E, indicates that it is 6¼ inches? A. There is a discrepancy there somewhere in the building of the machine itself; the blocks only measure 5¾, and the device for raising and lowering the stands exactly on nothing.

XQ500. But the actual measurements show 6¼? A. In accordance with this blue print, yes.

XQ501. You said that the adjustment on this Hammermill machine, as you recollect, provided for four inches adjustment. Does that mean two inches up and two down? A. No, four

inches either way.

XQ502. Why then, when they wanted to put in two extra inches, why didn't they simply accomplish that by means of the adjustment? A. I presume the reason for doing that would be they would still have two inches to go, if they wanted it. It gives us a slight leeway; that is the only condition I know of.

XQ503. You think that adjustment was four inches up and four inches down? A. That is my recollection, four inches either way.

XQ504. How were those blocks placed there? A. I don't understand that.

XQ505. Was there one block or a series of blocks? A. There were two blocks.

XQ506. Did they block up the suction-boxes? A. No, they are carried in a different way on the Moore & White.

XQ507. They stayed flat, did they? A. You have got the patent here; I can show you on the patent.

XQ508. The suction-boxes remained flat on those machines? A. Yes; the suction-boxes here?

XQ509. Yes. A. No, I don't think they were quite flat.

XQ510. Did they block them up? A. They were blocked up, or something done to them. The suction-boxes, in my recollection, were in line with the wire itself.

XQ511. You think that was done when the two-inch pitch was given? A. I couldn't tell you that; I don't think it was done until it was raised.

XQ512. There wasn't any need of doing it when there was only a two-inch pitch there, was there? A. I couldn't tell as to that.

XQ513. Don't you know you wouldn't have to raise the suction-boxes when you give your wire only two inches pitch? A. You get a bump in your wire; you have to do something with your suction-boxes.

XQ514. You can't even raise your wire two inches without raising the suction-boxes? A. I don't think so.

XQ515. How about the West Carrollton machines; were the suction-boxes raised there? A. I am not able to state; the machines were the same as those Moore & White machines.

XQ516. You said that the machines at the Champion Coated Paper Company had Kutter adjustment. Does this adjustment provide for running either up hill or down hill? A. I couldn't say; I never used it.

XQ517. You said you saw one machine that had some blocking under it at Niagara Falls? A. Yes, sir.

XQ518. Did you see the other machines there, too? A. I

went through the machine room there; I paid attention to a comparatively new machine.

XQ519. You don't know whether there was any blocking under the others, or not? A. There was under the next one to it; I didn't see all the machines.

XQ520. Have you any definite recollection what the extent of the blocking was? A. It was quite noticeable.

XQ521. It is impossible at this distant time, without anything to go by, to attempt to fix the extent of it? A. It looked about like the machine looks now, somewhere around the same blocking as at International Falls.

XQ522. You don't mean to have the court understand that you can, fifteen years after the event, tell from your recollection what the height of those blocks was? A. It was a great deal higher than the one that was in Erie. I didn't measure it; I couldn't say that it was five inches or six inches.

XQ523. Now that mill at Kimberly, Wisconsin, had a Moore & White device, a Moore & White adjustment? A. No, I think it was built by the Beloit people, that machine.

XQ524. Didn't it have an adjusting screw device like the Moore & White? A. Something similar to the Moore & White.

XQ525. In the machines were the suction-boxes blocked up, or were they level? A. I don't know.

XQ526. Did you notice whether this adjusting device allowed dropping the wire below the level, as well as raising it above the level? A. No, I did not.

XQ527. How many times did you see that? A. I was just in the mill after it was started up.

XQ528. Have you any clear recollection about that pitch? A. I know it was raised; I have a clear recollection it was raised.

XQ529. But as to the extent of the pitch, are you prepared to give us any definite statement? A. I can't give you any definite statement.

XQ530. When did you first hear about the Eibel patent, do you remember? A. About—some years ago; if I recollect, it was somewhere around 1907 or 1908.

XQ531. How did you happen to hear about it? A. It was published.

XQ532. Published in what? A. In the Paper Trade Journal; I believe that is the first time I noticed it.

XQ533. I notice in an affidavit that you made in this case that you implied that ten years ago the practice began of raising the wires to a higher pitch in the news mills; is that right? A. About ten years ago, somewhere along there; about ten

years when I first heard that it went up to a very high pitch.

XQ534. What was the first machine where you heard of a very high pitch being used? A. I am unable to say that.

XQ535. What was some of the first? A. The first one I ever seen?

XQ536. Saw or heard of? A. I think I heard of it somewhere around 1907 or 1908; when I first heard of extreme high.

XQ537. Where was that high pitch used that you first heard of? A. I can't remember now; I wasn't in the newspaper end of it and wasn't interested in it.

XQ538. Well, the idea was adopted pretty generally throughout the country by the news manufacturers at about that time? A. I am unable to state; I wasn't in the newspaper end of it, and didn't get in contact with those mills.

XQ539. But you do know that about 1907 a good many news machines were given these high pitches? A. I know during that time there was a great deal of talk about it.

XQ540. I noticed you used the expression "substantial pitch" on your direct examination. What do you mean by "substantial pitch"? A. In what particular connection did I use that?

XQ541. What is your idea of a substantial pitch? A. My personal idea of substantial pitch is five or six inches.

XQ542. What was your reason for calling five or six inches a substantial pitch? A. Because it is quite high.

XQ543. Quite high as compared with what? A. With machines running on the level.

XQ544. Well, do you mean that that is about where the pitch begins to have substantial accelerating effect on the stock? A. No, I don't mean that.

XQ545. Why is that a substantial pitch, and pitches less than that not substantial? A. In the grades of paper that I am used to, it is my opinion that a pitch of six inches is quite substantial; is as high as is needed.

XQ546. Why is a pitch less than that not a substantial pitch in your view? I am trying to find out what your reason is for putting the line there? A. Well, the reason for substantial pitch, is something that is quite high.

XQ547. Do you think that a pitch of two inches, say, has any substantial accelerating influence on the stock? A. It has quite a little.

XQ548. Are you engineer enough to tell us just what it is? A. No, I don't think it could be determined. There is no way or means of determining it that I know of.

XQ549. Why don't you call two inches a substantial pitch,

if it has a substantial accelerating function? A. Two inches, I would call a lower pitch.

XQ550. You don't answer my question. Why do you—why don't you call it a substantial pitch, if it has a substantial accelerating influence? A. I don't quite understand you, just what you mean by that. Explain that, please; just what you mean by that.

XQ551. Do you mean that two inches has a substantial accelerating influence on the stock on the wire? A. Depends entirely on what kind of stock you run over the wire.

XQ552. What do you mean by that? A. What kind of paper you are making at that time; it has more on one kind and less on another.

XQ553. On what kind does it have more, and on what kind less? A. The slow stock, or slower stock, it undoubtedly has more influence on than on free stock.

XQ554. Why? A. The water leaves it much earlier.

XQ555. Did the Hammermill people ever try to raise their pitch above four inches you have spoken about? A. I don't think they did.

XQ556. Have they in recent times? A. I wouldn't say whether they did in the last three years; it was about four or five inches when I left there.

XQ557. They don't make newspaper? A. Only made newspaper once.

XQ558. What kind of a machine was it you saw at Niagara Falls? A. My recollection is it was a Horne machine.

XQ559. You spoke about an adjustment that was used on the machine of the Champion Coated Paper Company as being a Kutter adjustment? I show you Kutter Patent No. 654,651, and ask if that represents the form of adjustment you referred to? A. That is practically the same outfit they are using today on the machines; about the same outfit that is on there.

XQ560. That is the same one that was on that machine of the Champion? A. As near as I can recollect; something similar to that.

XQ561. That adjustment has an up-hill or down-hill adjustment as you like? A. When I seen it, it was up.

XQ562. It has the capacity of depressing the breast-roll below the level as well as raising it above the level? A. As far as the Champion Coated concern, I couldn't say yes or no; but I believe from all other ones I seen—I know it has.

XQ563. Now, in these two or three instances which you have referred to, where there was blocking under the machines, do you know whether the foundations of the machines were level?

A. The foundations of some of those machines were level. There is only one that I seen with the foundation built underneath.

XQ564. Which was that? A. At Fort Frances.

XQ565. Well that is the— A. Fort Frances Pulp & Paper.

XQ566. Have you any means of knowing whether the wire at Niagara Falls would have run level, if there had been no blocking under the machine? A. I have not.

XQ567. How about the Hammermill? A. I know it would be level if they took the blocks out.

XQ568. You said there was an increase of speed at Hammermill when the two-inch pitch was put in the machine? A. Yes.

XQ569. How much? A. About a ton a day.

XQ570. How much does that mean in feet per minute? A. It couldn't very well be converted into feet per minute; depending entirely on the weight of the paper that was produced at that time.

XQ571. Well, do you mean that there must have been more feet per minute produced? A. Oh, yes, there were more feet.

XQ572. How many more? A. I couldn't tell.

XQ573. The mere fact that there was a ton more paper produced, wouldn't show how many more feet per minute were produced? A. It is a matter of fact that there was more paper produced than before the machine ran faster.

XQ574. There is no way of telling how much faster? A. I don't recollect how much faster; the percentage I presume you want to know.

XQ575. The paper would be heavier, and that would account for the extra tonnage per day? A. No, I didn't mean to state that. The variation in the weight of the paper, also makes a variation in the speed. You can run at 200 feet per minute and produce the same amount of paper that you would and run at 400 feet a minute, if you make just twice as heavy paper. And the machine with heavier paper, the increase in speed naturally has to be a great deal less than in light paper to produce more.

XQ576. There wouldn't be any way of telling what that increase in speed amounted to, without looking at the records? A. I would have to look at the records; and then it can't be found out any more, because there are no records of speed kept. The only records are the records of production.

XQ577. If that machine ran at a two-inch pitch at various times—did it run at speeds from 80 feet per minute to 480? A. I stated before that the machine was equipped at six to one ratio, and it necessarily meant they would follow that ratio,

but my recollection is that machine has run around 100 and as high as 400.

XQ578. It had all those various speeds, varying from 80 to 400? A. We have used all, yes.

XQ579. Every day it was changed at all, it would be by a jump of 80 feet a minute? A. No, not necessarily.

XQ580. What does that mean, it was geared at the ratio of six to one? A. The engine driving that machine could be run six times as fast as the slow speed.

XQ581. Six times as fast or five times or four times? A. Or four and three-quarters times as fast; it is only a question of speeding the engine up.

XQ582. Do I understand that when you put blocking under the breast-roll end of a Fourdrinier machine, you do not thereby raise the suction-boxes, but that if you wish to raise the suction boxes, you have to put a separate block or blocks under the boxes themselves or under that section of the frame which carries them? A. When raising the machine, you raise the part from the breast-roll to where the suction-boxes commence, first; the rail is cut at that point. Then you can raise the part, the rail from there toward the couch-roll also, or you can raise the standards underneath.

XQ583. And merely putting a block under the breast-roll end of the machine, if you don't do any more than that, doesn't affect the suction-boxes, but leaves them level? A. It does leave them level.

XQ584. Now, in your direct examination, you were asked about paper speeds in times when you first became connected with the paper industry, and you said that they varied according to the paper; that news was run faster than book or manila paper. Under those conditions, what was the speed at which they were making news? A. My recollection is about 50 to 60 meters.

XQ585. That would be, translated into English? A. From 160 to 190 feet.

XQ586. That would be in 1895? A. Yes.

XQ587. Do you know whether this Eibel patent, when it was published in the trade journals, was widely read or not throughout the trade? A. I really couldn't answer that question.

XQ588. It made quite a noise in the art? A. I know I read it.

XQ589. Well, probably it was discussed pretty generally in the art at the time?

Mr. Paul: I don't think that is cross examination. I have

not made any objection, but it seems to me that is a matter of pure speculation.

XQ590. Did you discuss it with other people in the trade? A. Not that I know of, except with my immediate associates.

XQ591. You said that the paper machines at Fort Frances had higher speed than those in the American mill? A. Yes, sir.

XQ592. How much higher? A. Run about, from 20 to 30 feet faster.

XQ593. As I understand you, you said that the paper formed earlier on the wire with the present six-inch pitch of the No. 2 machine than it did with the 14-inch pitch. Is that correct; what is the fact? A. It forms in about the same place; practically the same place.

XQ594. Did you say it settled earlier on the No. 2 machine with the six-inch pitch than it did with the 14-inch pitch? A. As I stated before, I don't know exactly just where it settles, and I couldn't answer the question probably, but it seems to me, from the looks of it, it is in practically the same place. There may be a little difference, but very little.

XQ595. If there is any difference, is it in the direction of earlier settlement with the six-inch pitch or with the 14-inch pitch? A. I really am not in position to explain that properly.

XQ596. What would happen as regards the settling of the paper if you ran that machine with no pitch at all, at any time at the same speed you are using? A. If you run slower, it would be the same thing.

XQ597. Supposing you ran the same speed you do now? A. Then you would lose your water, and when it started to settle, it would be near the breast-roll.

XQ598. You mean you couldn't run it at the speed at which it now runs with a flat wire? A. The machine couldn't run as fast as it is running at the present time with a flat wire and produce the same sheet of paper.

XQ599. How fast could it run and produce the same sheet of paper? A. That is a question for experiment; I wouldn't be able to say how fast it could run.

XQ600. Has the desire been always to get as much speed as you could in news? A. The general trend amongst paper manufacturers, since I have been with them, has been with all papers to get as much as they could make.

XQ601. Why is that important? A. To get a greater production.

XQ602. Well, has it been the great desire of paper makers, on account of the heavy investment, to get more speed all along? A. During the last twenty years, efforts have been made in

every possible direction to produce more paper on the same machine.

XQ603. What is the speed at which book paper is ordinarily run nowadays? A. The name "book paper" cover a multitude of sins, and some of it runs as fast as news, and some of it only 200 and 250 feet.

XQ604. Do you contemplate making any other changes than have been made, in order to leave it in this condition permanently? A. It is necessary, if it is left in the same position it is now, to put in permanent work.

XQ605. Put in what? A. Put in the work permanently; change the pipings and screens, and put different blocks underneath it.

XQ606. How much of a job would that be? A. Oh, it is quite a job.

XQ607. Could it be done while the machine was running? A. Oh, no.

XQ608. Well, could it be done over Sunday? A. No.

XQ609. You wouldn't have to stop running your machine at any time except on a Sunday, to make whatever further changes are necessary, would you? A. Oh, yes. The machine is built to run on an incline, and all the auxiliary machinery, such as screens, drives, piping, is correspondingly high. Now in order to change that, you have to do a lot of concrete work and get new stuff in there, particularly concrete, and I don't think the concrete work would settle Sunday, even if you could put it in after you get the new parts.

XQ610. Do you know what the weight of the paper made on the No. 2 machine is now? A. 32-lb.

XQ611. What is the weight on the other machines? A. 32.

XQ612. This sample you produced is 32? A. 24x36, 32-lb. 32 pounds to 500 sheets.

RE-DIRECT EXAMINATION.

By Mr. Paul:

RDQ613. I don't know whether I understood you, but I thought you said you couldn't tell whether the acceleration by gravity would be any different with a 14-inch pitch than with a six-inch. Did you mean that? A. I did mean, if you understood it that way, that I couldn't tell how much difference there was.

RDQ614. I understood you to say that you couldn't tell whether there would be any. A. There is some difference, but I couldn't tell how much difference it is.

RDQ615. I thought you answered that you couldn't tell

whether there would be any? A. If I remember the question, it was how much difference there would be.

RDQ616. That is the way you answered it? A. That is the way I answered it.

RDQ617. Those are Pusey & Jones machines up there, the defendant's machines? A. All Pusey & Jones.

By consent of counsel, signature is waived.

Mr. Paul: Counsel for defendant states that on Thursday last, May 24th, he ran across, in the issue of the "Paper Mill" of February 10, 1906, an article written by Stuart D. Lansing, containing the following statement: "We have run our machines through a period of years constantly at a speed upwards of 550 feet per minute, and have had some machines which have made paper satisfactorily at 580 feet per minute, and the fastest at 618 feet per minute."

Counsel further states that he has since been advised that Mr. Stuart D. Lansing is president of the Bagley & Sewall Company, and gives notice that he has taken steps to endeavor to ascertain the facts in connection with the machines referred to by Mr. Lansing; and that he will, as soon as these facts are ascertained, apply to the court for authority to take further testimony to show the location, time of use, etc., of such machines.

MIKE PETER LUDWIG.

a witness called on behalf of the defendant, being first duly sworn, deposes and says, in answer to questions by Mr. Paul as follows:

Q1. What is your name? A. Mike Peter Ludwig.

Q2. How old are you? A. Going on 41.

Q3. Where do you live? A. Little Falls,

Q4. Minnesota? A. Minnesota.

Q5. What do you do? A. Run machine for the paper mill.

Q6. What paper mill is that? A. Hennepin Paper Company.

Q7. What kind of machine is it? A. Fourdrinier, Beloit.

Q8. What kind of paper do you make there? A. Print.

Q9. Did you ever work at Rhinelander, Wisconsin? A. Yes, sir.

Q10. Worked in the Rhinelander Paper Mill? A. Yes, sir.

Q11. When did you go there, in reference to the time that the mill started? A. Well, I came there before they started the mill. I can't remember just what year it was, about 13 years ago, something like that.

Q12. Have you any way of fixing the time as being about 13 years ago? A. Why, yes, my girl, she was only a little baby,

and she is 13 years old now, so it must be about 13 years. I went there before they started the mill.

Q13. You helped start up the mill? A. Yes, sir.

Q14. You were there when the mill started? A. Yes, sir.

Q15. What machines did they have there in the Rhinelander mill? A. They had two of them.

Q16. What make were they? A. Beloit.

Q17. Is there any means on those machines for raising the wire? A. Yes, there was a screw on there to raise it, I should judge about an inch or two inches.

Q18. At the breast-roll end of the machine? A. Yes, sir.

Q19. And that would give you how much of a pitch to the wire? A. That is either an inch and a half or two inches.

Q20. Who was superintendent in the mill when it started? A. Tom Woods.

Q21. Do you know how long he stayed there? A. Just about a year.

Q22. What did you do? A. I was running a machine there.

Q23. Which machine were you running? A. Running No. 1 for a while, and then went over on No. 2.

Q24. That was your work all the time while you were there? A. I was back-tender for three weeks, when they started up.

Q25. And after that, you were machine tender all the time you were there? A. Yes, sir.

Q26. How long did you stay there? A. Three years and two months.

Q27. And from there, where did you go? A. To Park Falls, Wisconsin.

Q28. Do you know about raising the breast-roll end of those machines at any time while you were there, such as blocking them up? A. Blocking them up?

Q29. Did you know about that? A. About two months before they were going to do it.

Q30. You knew about its being done while you were there? A. Yes, sir.

Q31. Which machine was blocked up first? A. No. 1.

Q32. How much was it blocked up first? A. About six inches.

Q33. Did you know that it was going to be done before it was done? A. Yes, sir.

Q34. Who told you? A. John Alpine.

Q35. Who was he? A. Boss machine tender.

Q36. How long before the machine was blocked up was it that he told you this was going to be done? A. It is so long ago, it is pretty hard to remember; I think it was two months.

Q37. What did Alpine say to you at that time? A. He told me—

Mr. Lyman: Objected to as calling for hearsay.

—we have got to get rid of them light spots in the sheet; and that they were going to raise the Fourdrinier up, block it up, and get rid of them; get better formation of the sheet.

Q38. Were you there when the machine was actually blocked up? A. Not No. 1, no.

Q39. You didn't see that done? A. No, I was on the opposite machine; I happened to be on the opposite shift.

Q40. On the No. 2 machine? A. I was on No. 2, yes, at that time.

Q41. It was No. 1 that was blocked up first? A. Yes, sir.

Q42. You saw it after it was blocked up? A. Yes, sir.

Q43. Did you see it operate? A. Yes, sir.

Q44. After it was blocked up the six inches, was anything further done with it? A. Not for a couple or three weeks.

Q45. Then what was done? A. They raised it higher.

Q46. How much higher? A. Six or seven or eight inches, something like that. It is so long ago, a fellow can't hardly remember.

Q47. Now, did anyone say anything to you about blocking up the machine before it was done, except Alpine? A. No, sir.

Q48. He was the only one that spoke to you about it? A. He was the only one that spoke to me about it.

Q49. And he said he was going to block it up?

Mr. Lyman: Objected to as calling for hearsay.

A. Yes, sir.

Q50. After the No. 1 machine was blocked up, did they also block up the No. 2? A. Yes, sir.

Q51. How long afterward? A. Oh, I think around six weeks or two months.

Q52. Now, could you say how soon it was after Mr. Woods went away that Mr. Alpine told you he was going to block up the machine? A. It is about six or seven years ago; I can't think of it. I think it was within a short time, maybe a month or six weeks.

Q53. You don't remember the exact time? A. No.

CROSS EXAMINATION.

By Mr. Lyman:

XQ54. When was it this blocking was put in? A. How?

XQ55. When was it this blocking was put in? A. You mean the date?

XQ56. Yes. A. Gosh, now, I couldn't tell you what date it was; it was about, somewhere around two or three months, as

near as I can guess now, after Woods left there.

XQ57. And when do you think Woods left? A. Let me see —gosh, I don't remember whether it was fall or spring; I couldn't remember now.

XQ58. About what year? A. Eh?

XQ59. Of what year? A. He run the mill a year after I come there—thirteen years ago. (Pause)—that would bring it about 1904 or 1905, something like that.

XQ60. Thirteen years ago now would be 1904, would it, the mill started up? A. I was there when the mill started up. If I knew when the mill started up, I could tell you when Woods left. Thirteen years ago my little girl was a baby; it was twelve years ago Woods left.

XQ61. Then Woods would have left in 1905, the spring of 1905? A. I don't know whether it was the spring or the fall; I think it was in the fall.

XQ62. Woods testified in another case that he left Rhinelander April 12, 1905. Is that your recollection? A. That he left in the spring then?

XQ63. April 12, 1905. Does that agree with your recollection? A. I am trying to think—because his brother was there at that time; he was night boss, and he was hanging around there—I don't know whether it was the winter or summer. It's so long ago, that a fellow forgets. I wouldn't say whether it was the spring or the fall, because I don't remember it—what time it was when he left.

XQ64. This blocking, you say, was put in two or three months after he left? A. After Woods left.

XQ65. That would be in 1905 some time? A. He left there in 1905.

XQ66. You say the No. 1 machine was blocked up first, do you? A. Yes, sir.

XQ67. Are you sure about that? A. Yes, sir.

XQ68. And the No. 1 machine, when it was first blocked up had a pitch of about six inches? A. About six inches the first time.

XQ69. And then it was blocked up another six inches more? A. It was blocked up another six inches more than that. They doubled it—six, seven, or eight inches it might have been; it was over six inches though.

XQ70. The total pitch would be 12 or 14 inches? A. About 14, I think it was; the second time they raised it up to about 14 inches.

XQ71. And when do you think the second date was they raised it up? A. Two or three weeks after; I don't remember

the date.

XQ72. Now, how long after No. 1 machine was blocked up was No. 2 machine blocked up? A. Six weeks, two months—six or eight weeks.

XQ73. Was that blocked up to the full height of the other one? A. It was raised up seven inches.

XQ74. Did they raise it another seven inches? A. They left it there.

XQ75. Did you ever talk with Mr. Eibel about the matter? A. About what?

XQ76. About raising this wire? A. Why, he used to come around there and talk about it, after they raised it up, but he never said anything about whose patent it was; just talked about raising it up. He never said a word about the patent or getting a patent until after Alpine left there.

XQ77. When did Alpine leave? A. He left there in the spring.

XQ78. Spring of what year? A. Let's see,—1906, I think it was.

XQ79. Did you regard this pitch on the wire as a good thing? A. Yes, sir.

XQ80. Where did you work before that? A. Before I went to Rhinelander?

XQ81. Yes. A. I was up in Brokaw, Wisconsin, a while; before that, in Sheboygan, Michigan.

XQ82. Had you ever heard of a pitched wire before this time? A. Oh, they all had screws to adjust them, but I never really seen anybody monkeying around with them.

XQ83. They generally ran flat? A. Some of them they had down below.

XQ84. Running up hill? A. Running up hill—all depends on the condition the stock was in. Now everything is running faster.

XQ85. Are you using the pitch at the Hennepin? A. Yes, sir.

XQ86. How many inches are you using there? A. 14.

XQ87. Pitched wire is pretty universal now, is it in paper mills? A. How?

XQ88. Pitched wires—is it pretty universal to use pitched wires in news machines now? A. Do you mean use them all around?

XQ89. Yes. A. I think so.

XQ90. And did the idea of putting a pitch on the wire strike you, when it was put in at Rhinelander, as being a surprising kind of a thing? A. Why, I never heard of it before until Al-

pine told me; and after he told me, I thought it would be a pretty good thing. It surprised me, because I never heard of them raising them up. They were on screws.

XQ91. That was a very different proposition? A. Yes, that screw. It was—it only put on an inch and a half or two inches; that is all you could raise it.

XQ92. That screw was used as much to run the wire up hill as down hill? A. At Rhinelander they didn't let it down any.

XQ93. I mean the old mills? A. Yes, they used to let it down; at some places, they run an inch below.

XQ94. I suppose newspaper mills are always crazy for more speed? A. Oh, yes.

XQ95. And always have been? A. Yes.

XQ96. How long have you been in the paper mill business? A. 25 or 26 years.

XQ97. You say you didn't see the pitch being put on the No. 1 machine? A. On the No. 1, no, sir.

XQ98. Did you see it being put on the No. 2? A. Yes, sir, I helped put it up.

XQ99. It was put on—by whom was it put on? A. Why, Alpine and John Wiesner. He was an old mill-wright that was there at that time. I don't know whether he is living now or not.

XQ100. What was Alpin's job at that time? A. Boss machine tender.

XQ101. When did you first learn about the Eibel patent? A. That he was going to get a patent?

XQ102. That he was going to or had one? A. He told me shortly after Alpine left there; he told me he was going to get a patent on it. And, let's see—I don't know how long I stayed after Alpine left, about nine months—I don't know whether he had a patent out at that time or not. Eibel told me he was going to get a patent on it.

XQ103. When did you first hear that he had a patent on it? A. Why, gosh, you got me now; when did I hear he got a patent on it? Let's see—he told me he applied for the patent, and he was going to get a patent, that's as much as applying for it, I suppose. If he got a patent before I left there, I don't know.

XQ104. When did you leave there? A. I have got to figure back—Livermoore Falls, 1908—I left there 1907, I left there in April—in March; I went to work in Park Falls April Fool's day.

XQ105. You went to Park Falls from where? A. Yes, sir.

XQ106. Where did you go from Park Falls? A. I went

from Livermoore Falls, Maine.

XQ107. What company was that? A. The International Paper Company.

XQ108. After that, where did you go? A. I went to work in Merrill, Wisconsin.

XQ109. What is the name of the company at Merrill, Wisconsin? A. Grandfather Falls Paper Company.

XQ110. When you went to Livermoore Falls, did they have a pitch there on the wire? A. I don't think so.

XQ111. Did they put one in while you were there? A. No, sir.

XQ112. How about Park Falls? A. I raised the wire there myself.

XQ113. How much of a pitch did you put on? A. Seven inches.

XQ114. What is there at Park Falls? A. Oh, just that paper mill.

XQ115. Whose paper mill is it? A. Flambeau.

XQ116. And did they keep that pitch there while you were there or was it changed? A. They kept it while I was there, and left it there when I left again.

XQ117. Then you went from Livermoore Falls to Merrill, Wisconsin? A. Yes, sir.

XQ118. Did they have a pitch there when you went there? A. At Merrill?

XQ119. Yes. A. Gosh, I can't say for sure whether they had a pitch on the wire or not.

XQ120. Did they put one in while you were there? A. No, sir, I don't think they had the pitch there; I ain't sure though.

XQ121. Where did you go after you left Grandfather Falls? A. I worked as back-tender at Grand Rapids.

XQ122. What is there at Grand Rapids? A. One machine mill.

XQ123. What mill? A. Gosh, you know—I don't know the name of the paper mill now.

XQ124. Was it the Itasca? A. The Itasca, that's it.

XQ125. Did they have a pitch on the wire there? A. By gosh, I was back-tender there; I never noticed at all.

XQ126. Isn't the back-tender likely to notice whether the wire is pitched or not? A. Is he supposed to know, or likely to know?

XQ127. Either one. A. Oh, yes, if he takes notice of it. I only worked there a short time though; only four or five weeks; then I went east.

XQ128. Is the back-tender likely to notice? A. Oh, yes

XQ129. You don't know whether there was a pitch or not? A. I ain't sure whether they had a pitch or not.

XQ130. Where did you go after you left Itasca? A. I went to Palmer Falls, N. Y.

XQ131. Who run the paper mill there? A. The International Paper Company.

XQ132. Did they have a pitch on the wires there? A. Yes, No. 4 had a pitch on there.

XQ133. No. 4 machine? A. Yes.

XQ134. How much of a pitch did they have there? A. I couldn't say how much it was.

XQ135. Was it a high pitch? A. Good gosh, I ought to take that back; I don't remember whether there was a pitch on that wire there or not.

XQ136. Where did you go after you left there? A. Palmer Falls?

XQ137. Yes. A. I went to Sartell.

XQ138. What is there at Sartell? A. Paper mill—Watab Pulp & Paper Company.

XQ139. When did you go there? A. 1913.

XQ140. Did they have a pitch on the wire when you were there? A. Yes, sir.

XQ141. How much of a pitch? A. I should judge 12 or 14 inches, something like that.

XQ142. Did they have one machine or more than one? A. Two machines.

XQ143. Both wires pitched the same? A. Yes, sir.

XQ144. Where did you go after you left the Watab? A. Up with the Hennepin.

XQ145. Did the have a pitch when you came there? A. Yes, sir.

XQ146. How many machines have they at Hennepin? A. Just that one; just one machine up there.

XQ147. What was your job at Grandfather Falls? A. Running a machine.

XQ148. Machine tender? A. Yes, sir.

XQ149. You wouldn't, in fact, know whether there was a pitch on that wire or not? A. I ought to know; I can't seem to remember whether there was or not.

XQ150. What was Mr. Eibel's job at the Rhinelander Paper Co.? A. Now?

XQ151. No, at the time this pitch was put in? A. Superintendent.

RE-DIRECT EXAMINATION.

By Mr. Paul:

RDQ152. Was Mr. Eibel around there when the blocking was put under the No. 2 machine? A. I don't think so.

By consent of counsel, signature waived.

Mr. Paul: It is stipulated that the exhibits produced by either party in the taking of depositions may remain in the possession of the party producing the same, to be produced at the trial and at the time of taking any other depositions in the cause.

Mr. Lyman: Or at any time upon request and reasonable notice from opposing counsel.

Mr. Paul: And that it is further stipulated that uncertified patent office copies of letters-patent, United States or Foreign, may be offered and used in evidence with the same force and effect as the original certified copies, subject to correction by such original or certified copies.

Mr. Paul: Counsel for defendant states that he will examine at Neenah, Wisconsin, on Tuesday next, in addition to the witnesses named, Albert W. Tohms, of Oshkosh.

STATE OF MINNESOTA,

ss.

County of Ramsey.

I, Frank H. Ford, a notary public within and for the state of Minnesota, do hereby certify that the foregoing depositions of Cone Barlow, John A. Devine, Joseph A. LeValley, Carl F. Beyerl, and Mike Peter Ludwig, were taken on behalf of the defendant, pursuant to notice, before me, at the office of Paul & Paul, 854 Security Building, Minneapolis, Minnesota, on the 25th and 26th days of May, 1917; that the witnesses were by me first duly sworn before the commencement of their testimony; that the testimony was taken in shorthand by myself and afterwards written out in typewriting by me; that the opposing party was represented by its counsel, Mr. Harrison F. Lyman during the taking of said testimony; that the said testimony was taken at Minneapolis, in the county of Hennepin and state of Minnesota, and was commenced at two o'clock p. m. on the 25th day of May, and was continued pursuant to adjournment on the 26th day of May, and was concluded on the 26th day of May, 1917; that the signing of the depositions was waived by consent of counsel; that I am not connected by blood or marriage with either of said parties, nor interested directly or indirectly in the matter in controversy.

In testimony whereof, I have hereunto set my hand and affixed my seal of office at St. Paul, Ramsey county, Minnesota, this 28th day of September, 1917.

F. H. FORD,
(Seal) Notary Public,
Ramsey County, Minnesota.

My commission expires Nov. 13, 1920.

DISTRICT COURT OF THE UNITED STATES.
DISTRICT OF MAINE.

EIBEL PROCESS COMPANY, Plaintiff,
vs.
MINNESOTA & ONTARIO POWER COMPANY, Defendant.
} In Equity No. 769.

Depositions taken on behalf of the defendant in the above entitled cause, before Miss Bessie M. Hale, notary public, by Frank H. Ford, a disinterested party, commencing on Monday, May 28th, 1917, at ten o'clock a. m., at the office of Mott & Fenn, National Manufacturers' Bank Building, Neenah, Wisconsin, pursuant to the annexed notice.

Appearances: On behalf of plaintiff, Mr. Harrison F. Lyman. On behalf of defendant, Mr. A. C. Paul.

And thereupon the following proceedings were had:

GEORGE TOMSKE,

a witness called on behalf of the defendant, being first duly sworn, deposes and says, in answer to questions by Mr. Paul as follows:

Q1. What is your name? A. George Tomske.

Q2. Where do you live, Mr. Tomske? A. Grand Rapids, Wisconsin.

Q3. How old are you? A. 36.

Q4. What is your occupation? A. Boss machine tender.

Q5. Where are you employed? A. Consolidated Water Power & Paper Company, Grand Rapids.

Q6. How long have you been employed by the Consolidated Water Power & Paper Company? A. This last time, three years, this coming September.

Q7. You had worked for them before? A. Yes, sir.

Q8. Were you ever employed at Rhinelander mill, Rhinelander, Wisconsin? A. Yes, sir.

Q9. When did you go to work there? A. 1904.

Q10. That was soon after the mill was built? A. Yes, I am quite sure it was 1904.

Q11. What did you do when you first went to work in that mill? A. I was back-tender.

Q12. Back-tender on paper machines? A. Yes, sir.

Q13. What machines were used? A. On the No. 2 machine.

Q14. What machines did they have in use in the mill at that time? A. Beloit machines.

Q15. Had two Beloit machines? A. Yes, sir.

Q16. Who was the machine tender on the machines on which you worked when you first went there? A. Irvine Straut.

Q17. Did you at any time work as back-tender on a machine on which John Alpine was machine tender? A. After I worked for Straut.

Q18. How long did you work for Irvine Straut? A. About two months.

Q19. Then you went on a machine on which Alpine worked? A. Yes, sir.

Q20. How long did you work on that machine as back-tender? A. Well, about nine months I think, something like that.

No questions from 21 to 30 inclusive.

Q31. Did you work as back-tender on that machine as long as it was run by Alpine, as long as he was machine tender? A. He was on there before I went on as back-tender.

Q32. Did you remain as back-tender as long as he was machine tender? A. Yes, sir.

Q33. After he quit working as machine tender, what job did he have? A. Boss machine tender.

Q34. Now, do you know about when it was that Alpine went on as boss machine tender? A. Yes, early in the summer. It was early in the summer of 1905; I don't know exactly the time.

Q35. Who was superintendent when the mill was first started? A. Tom Woods, when I went to work there.

Q36. How long did he stay there? A. About a year, I think; let's see,—about a year, I think.

Q37. Now these Beloit machines, were the two machines

alike? A. No; one was a lighter built machine—they used to make water-finish and wrapping paper.

Q38. These machines were known as No. 1 and No. 2? A. Yes, sir.

Q39. What machines did you work on as back-tender? A. Both.

Q40. What machine did Alpine run as machine tender? A. No. 1.

Q41. And it was on the No. 1 machine you were working as back-tender when you were working with Alpine? A. Yes, sir.

My Lyman: Which did you say was the lighter of the machines?

The Witness: No. 2.

Q42. Did those machines have any means for raising the Fourdrinier frame at the breast-roll end? A. They had an adjustable roll that would raise it about two inches.

Q43. What means did they have for raising it? A. A screw.

Q44. How was that operated? A. With a crank.

Q45. Turning that crank operated a screw to raise and lower it? A. Yes, sir.

Q46. Screws on both sides of the machine? A. Yes, but the crank on one side.

Q47. Both screws operated with one crank? A. Yes, sir.

Q48. How much did you say that would raise the breast-roll? A. About two inches, I think.

Q49. Do you know whether while you were acting as back-tender, do you know whether Alpine was accustomed to raise that breast-roll end of the machine that he was working on? A. I don't know.

Q50. He may have done that? A. He may have; I couldn't say. I wasn't interested in that end of it at that time.

Q51. You were working as back-tender at that time? A. Yes.

Q52. Where does the back-tender work? A. On the dry end or finishing end.

Q53. And about how far would that be from the breast-roll end of the Fourdrinier? A. About 75 feet.

Q54. I think you said after Alpine had been machine tender, he later became boss machine tender? A. Boss machine tender.

Q55. What is the work of boss machine tender? A. To superintend the operating of the machine and keep them in repair.

Q56. That is the work Alpine did after that? A. Yes, sir.

Q57. Now, did you, at any time, have any other position than back-tender? A. Before I went to Rhinelander?

Q58. No, afterwards. After you were back-tender, what position did you have? A. Machine tender.

Q59. About when did you become machine tender? A. During the summer of 1905.

Q60. And when you were machine tender, what position did Alpine have? A. Boss machine tender.

Q61. Do you recall any instance when that frame of the No. 1 machine was raised?

Mr. Lyman: Just one moment. Objected to as not material to any defense raised in the answer.

A. After Mr. Alpine was—went on as boss machine tender, or before?

Q62. Well, either. A. I don't recall any before, but I do after he went on as boss machine tender, and after I became machine tender.

Q63. Now, state the circumstances, just what occurred, the time you recall when you were machine tender and Alpine was boss machine tender.

Mr. Lyman: This question is objected to as not material to any defense set up in the answer; and it is stipulated that the same objection may be regarded as taken to any subsequent question along this line, without repetition.

Q64. State the circumstances, just what occurred at that time? A. Well, they were gradually increasing the speed of the machines. They commenced to have trouble with waves on the wire and uneven flow of stock; it seems the speed of the wire was too great for the flow of the stock. They were trying to overcome that, and of course Mr. Alpine was working on that, but I didn't know at the time what he intended to do or what his aim was. A little later he called me over, and told me that he was trying to overcome the trouble he was having with the waves on the wire, and trying to increase the flow of the stock on the wire, to get it to travel about the same speed, or somewhere near the same speed, the wire was traveling. So he told me to raise the adjustment screw of the breast-roll end of the wire, and he would watch the flow on the wire and see if it would make any difference. So he stood there and watched the flow while I raised the screw; and I turned the crank until I had it raised as high as it would go. Then I quit and told him I couldn't get it any higher. Then he pointed to me that it had improved conditions; and pointed to a spot on the wire, where it showed improved conditions.

Q65. What did he say that it did? A. He said it done away with the waves on the wire to a certain extent, by increasing the speed of the stock, or the flow of the stock.

Q66. He explained that to you at that time? A. Yes.

Q67. After that, did you notice Alpine do anything further? A. Why, then he went and called Mr. Eibel and brought him to the wire and they both stood there and talked, and what they talked about, I don't know. And when Mr. Eibel left, he told me he suggested raising it still higher. He told me he suggested raising the wire still higher, on jack screws. Then he says that Mr. Eibel objected to it; that he was afraid he might do more harm than good.

Mr. Lyman: Answer objected to as hearsay.

Q68. When you say "he told me that he suggested," whom do you mean told you? A. Mr. Alpine.

Q69. He told you he, Alpine, suggested? A. Yes, sir.

Q70. When you raised up the breast-roll end of the machine at Mr. Alpine's request, as you have stated, what, if anything, was done with the suction boxes? A. Well, at that particular time, when we raised them up, he didn't do anything with the suction-boxes, because he stood at the wire all the time I was raising it, but then, later on, he raised the suction-boxes; tipped them.

Q71. How did he raise the suction-boxes? A. With the adjusting screws under the boxes, that hold the boxes up in their position. And then, later on, he raised the frame that was holding the boxes; he put a little shim under there.

Q72. What were those boxes on? A. They were on screws that come through and under the frame, and they were resting on these screws, and you could raise the boxes, adjust them with the screws.

Q73. Then how was the frame held that carried the boxes? A. That was a part of the machine, the Fourdrinier end of the machine.

Q74. What was that frame supported on? A. Why, bolts on the stands at them points, those suction-boxes, where the frame—the shake—divided; the frame under the stand and down lower. The stand is what the boxes are supported on.

Q75. Where was it he put these shims you speak of? A. Where the plate above the boxes rest on; that is to allow the boxes to go up higher than they were at the time before he raised the frame.

Q76. Now, what was the reason for adjusting these boxes that you speak of? A. To bring them up so they would come in contact with the wire. Otherwise raising the wire, you bring the wire away from the boxes.

Q77. Did the raising of the wire by screws, did that bring the wire away from the boxes two inches? A. No, not two

inches.

Q78. I mean when you raised the screws two inches— A. Yes.

Q79. —at the breast-roll, did they raise the wire away from the boxes? A. A little.

Q80. And was that taken care of by this adjustment you speak of? A. Yes.

Q81. So the boxes were brought up against the wire? A. Yes.

Q82. After this time when you raised that breast-roll end of this Fourdrinier machine by screws, was any further change made in the machine or in the supports of the machine later on? A. In regards to raising it?

Q83. Yes. A. Later on, yes.

Q84. What was done, then? A. They raised it still more, and put it up on blocks.

Q85. When was that done? A. Some time later; I don't know exactly how long, but it was some time later.

Q86. What time of the week was it done—what day? A. I can't say that. When was it put on the blocks?

Q87. Yes. A. On Sunday.

Q88. It was done on Sunday? A. Yes.

Q89. Is it customary to shut down on Sundays? A. Yes.

Q90. You run six days and shut down on Sunday, and start again Monday morning? That was the practice right along? A. Yes, sir.

Q91. Were you present there in the mill when the machine was raised on the blocks? A. No, sir.

Q92. When did you first see the machine after it had been put on the blocks? A. When I come on tour on the night shift.

Q93. And that would be when? A. On a Monday night.

Q94. Monday night after the machine was blocked up on Sunday? A. Yes, sir.

Q95. How much was the machine blocked up, the breast-roll end, the first time? A. About six inches, I think.

Q96. Was it run that way, with the six-inch blocking? A. Yes, sir.

Q97. How long? A. I can't say exactly; a week or two; something like that.

Q98. And then what was done? A. It was blocked up still more.

Q99. Do you remember how much more it was blocked up? A. I think about ten inches more.

Q100. Do you remember how long Alpine remained there at

the Rhinelander mill? A. He was on as boss machine tender about a year; a little better. I think he left there in June; just about a year he was boss machine tender.

Q101. June of what year would that make it? A. 1906.

Q102. You were there when he left? A. Yes, sir.

Q103. And still as machine tender? A. Yes, sir.

Q104. How long did you remain? A. About four months.

Q105. About four months after Alpine left? A. Yes, sir.

CROSS EXAMINATION.

By Mr. Lyman:

XQ106. When did you first become connected with a paper mill? A. With paper mills?

XQ107. Yes. A. When I was about 16 years of age.

XQ108. And what year was that? A. I am 36 now—what year is that?

XQ109. You tell us. A. 1897.

XQ110. It was 1897? A. Yes, 1897.

XQ111. Where was it? A. Kimberly.

XQ112. Kimberly, Wisconsin? A. Yes, sir.

XQ113. What mill? A. Kimberly-Clark Paper Company.

XQ114. What was your job there? A. Well, I started as a green boy, and worked up to back-tender.

XQ115. How long did you stay there? A. Three years.

XQ116. Then where did you go? A. The mill burned down and I went to Appleton.

XQ117. What mill at Appleton? A. The Tulula—I don't know how to spell it.

XQ118. You don't know how to spell it? A. No.

XQ119. What was your job there? A. Back-tender.

XQ120. How long did you stay at Appleton? A. Three months.

XQ121. Then where did you go? A. Niagara, Wisconsin.

XQ122. What mill? A. Kimberly-Clark Company.

XQ123. How long did you stay there? A. Nine months.

XQ124. What was the job there? A. Back-tender.

XQ125. Then where did you go? A. Shawano.

XQ126. Wisconsin? A. Yes, sir.

XQ127. What mill there? A. The Wolf River Pulp & Paper Company.

XQ128. What was your job there? A. Third-hand.

XQ129. How long did you stay there? A. Three weeks.

XQ130. Where did you go after that? A. Went to Rhinelander.

XQ131. Were you ever at Rhinelander more than once? A. Yes, sir.

XQ132. When did you go there the first time? A. I went there when they were building the mill; I helped build the mill.

XQ133. How long did you stay there at that time? A. About two weeks.

XQ134. Then what did you do? A. Is it necessary to mention what I done outside of work at paper mills?

XQ135. Yes, please. A. I went to work on the railroad, as bridge builder.

XQ136. Where? A. On the Northwestern, in the state of Wisconsin.

XQ137. How long did you work as bridge builder? A. About three months.

XQ138. Then what did you do? A. Went to work at the Consolidated Water Power & Paper Company.

XQ139. Where is that? A. Grand Rapids, Wisconsin.

XQ140. How long did you stay there? A. About a month.

XQ141. And what next? A. At Brokaw, Wisconsin.

XQ142. What mill is there there? A. Washoe Pulp & Paper Company.

XQ143. How long did you stay there? A. About a month and a half; about six weeks.

XQ144. Then where did you go? A. Appleton.

XQ145. To the Tulula mill? A. No, Riverside.

XQ146. What was your job there? A. Back-tender.

XQ147. How long did you stay there? A. About two months.

XQ148. Where did you go after that? A. Combined Locks.

XQ149. What mill is there at Combined Locks? A. It was the Van Nortwick at that time.

XQ150. What was your job there? A. Back-tender.

XQ151. How long did you stay there? A. About two months.

XQ152. Then where did you go? A. Rhinelander.

XQ153. What was your job when you went to Rhinelander then? A. Back-tender.

XQ154. You stayed there continuously until four months after Alpine left? A. Yes, sir.

XQ155. Have you ever been employed at Rhinelander since? A. No, sir.

XQ156. When was it that you left Rhinelander? A. 1906.

XQ157. What month? A. October.

XQ158. Where did you go from Rhinelander? A. Grand Rapids, Wisconsin.

XQ159. What mill? A. Consolidated Water Power & Paper Company.

XQ160. What was your job there? A. Machine tender.
XQ161. How long did you stay there? A. Five and one-half years.
XQ162. And you left there when? A. In what year?
XQ163. Yes, please. A. 1912.
XQ164. Then where did you go? A. Sartell, Minnesota.
XQ165. What is there at Sartell, Minnesota? A. Sir?
XQ166. What mill is there there? A. Watab Pulp & Paper Company.
XQ167. How long did you stay there? A. Fifteen months.
XQ168. What was your job there? A. Boss machine tender.
XQ169. Then where did you go to? A. Down to St. Mary, Canada.
XQ170. What mill? A. Lake Superior Pulp & Paper Company.
XQ171. What was your job there? A. Machine tender.
XQ172. How long did you stay there? A. Three weeks.
XQ173. Where did you go then? A. International Falls, Minnesota.
XQ174. When did you go to International Falls? A. 1914.
XQ175. The mill there was the Minnesota & Ontario Power Company? A. Yes, sir.
XQ176. What was your job there? A. Machine tender.
XQ177. What machine? A. No. 2.
XQ178. How long did you stay there? A. Ten months.
XQ179. Then where did you go? A. Park Falls.
XQ180. What mill? A. Flambeau Pulp & Paper Company.
XQ181. What was your job there? A. Night foreman.
XQ182. How long did you stay there? A. Five months.
XQ183. And then where did you go? A. Back to the Consolidated Water Power & Paper Company, Grand Rapids, Wisconsin.
XQ184. Been there ever since? A. I think I have.
XQ185. When did you go there, did you say? A. I think it was in the latter part of 1914—no, early in 1915—just a minute, now, it was in 1914.
XQ186. You said you went to International Falls in 1914, didn't you? A. Yes, sir.
XQ187. And stayed there ten months, and then went to Flambeau and spent five months there. You were therefore mistaken when you said you went to the Consolidated Water Power Company in 1914. It was 1915, was it? A. I am a little bit mixed up in that now. I went to the Consolidated in 1914.

XQ188. Now, have you told us all the different employments you had beginning in 1897, down to the present time? A. As near as I can.

XQ189. Have you been unemployed at any time during that period? A. Some, not much.

XQ190. How much, all told? A. About three months—about that.

XQ191. When was it you went to Rhinelander the first time? A. What year?

XQ192. Yes. A. 1904.

XQ193. When was it you went there the second time? A. Oh, the first time?

XQ194. The first time? A. That was in 1903.

XQ195. When was it you went the second time? A. 1904.

XQ196. What part of the year 1904? A. June.

XQ197. What part of the year was it when you started in the Kimberly-Clark place in 1897? A. I am not positive; I think it was in the spring of the year, some time in May, I think.

XQ198. Now, from the time you started in the Kimberly-Clark mill, in the spring 1897 to the time you went into the employ of the Rhinelander Paper Mills the second time, June, 1904, there was about seven years involved, but the different employments you have given us here only figure up a total of less than five years. How do you account for that difference? A. Well, there are several other places I worked that I didn't think of at that time when you asked me.

XQ199. Well, what were they? A. Grand Rapids, Minnesota.

XQ200. And what mill there? A. I worked in two other mills before I worked at Grand Rapids. Is it necessary to put those ahead?

XQ201. Yes, please? A. At Nekoosa, Wisconsin.

XQ202. What mill there? A. Nekoosa-Edwards Paper Company.

XQ203. What was your job there? A. Back-tender.

XQ204. How long were you there? A. Three months, about, I think.

XQ205. What year was that; can you place it with reference to any of these other jobs? A. About 1901, I think.

XQ206. Where else, please? A. Port Edwards.

XQ207. Wisconsin? A. Yes, sir.

XQ208. What mill there? A. Well, it is the same as the Nekoosa-Edwards Company, now, but at that time it was—they used to call it the Edwards Paper Company.

XQ209. How long were you there? A. About the usual

time.

XQ210. Three months? A. Yes, something like that.

XQ211. What else, after Port Edwards? A. Grand Rapids, Minnesota.

XQ212. What did you do there? A. Back-tender.

XQ213. What mill there? A. Itasca Pulp & Paper Company.

XQ214. What year was that? A. That was in the same year.

XQ215. And you were there about three months- A. About five months.

XQ216. Any others you can think of? A. Yes, then I went to Park Falls and worked in the saw mill.

XQ217. For how long? A. About two and a half or three months, something like that.

XQ218. Anything else? A. That is all I can think of. That is pretty nearly enough, isn't it?

XQ219. I should think so. (No answer.)

XQ220. How do you know it was 1904 when you went to Rhinelander the second time? A. The mill started up in that year.

XQ221. How do you know? A. Well, I don't know how I would explain that; I just happen to remember it was built in 1903 and started up in 1904.

XQ222. How do you know Alpine left in June, 1906? A. I happened to be working there when he left.

XQ223. Do you remember that date of your own unaided memory? A. Yes. Not exactly—I didn't say exactly in June, but I think about in June; I am quite sure it was in June.

XQ224. When did you say Tom Woods left? A. He left a little earlier than that; he left a year earlier, about the same time.

XQ225. Have you talked to anybody about your testimony before you began to testify this morning? A. No, not particularly.

XQ226. What do you mean by "not particularly"? A. I haven't talked about anything out of the ordinary, any more than what I was here for; what I was called here for.

XQ227. Did you talk to anybody about that conversation that you say you had with Alpine, when he told you about what he and Eibel had been talking about? A. Here?

XQ228. Yes. A. No.

XQ229. Didn't mention that to anybody at all until you came into this room this morning? A. No.

XQ230. Weren't you over to the hotel this morning, with

Mr. Paul? A. Yes, sir.

XQ231. You didn't mention that to him? A. No, sir.

XQ232. You didn't mention it to Alpine? A. No.

XQ233. Who else was over at the hotel? A. My brother.

XQ234. Who is he? A. Frank Tomske.

XQ235. How did you happen to come down here this morning? A. I was called here.

XQ236. By whom? A. By the under sheriff—ordered me here from Grand Rapids, Wisconsin.

XQ237. That is the first you had heard about the testimony here? A. Yes, sir.

XQ238. You didn't know you would be called, until you got that service served upon you by the sheriff? A. No, sir.

XQ239. When did the sheriff serve that notice on you? A. Last week.

XQ240. What day? A. Thursday or Friday.

XQ241. Nobody has spoken about the matter before or since to you? A. No; I haven't seen anybody since.

XQ242. What is the pitch on the wires at the mill where you are now working? A. Eight inches on one machine, and ten inches on the other.

XQ243. Wouldn't a back-tender naturally notice what pitch there was on the wire of a machine? A. Not the exact number of inches.

XQ244. Why not? A. Because, as a rule, a back-tender isn't interested in that end of it.

XQ245. How about the second-hand? A. The second-hand is back-tender.

XQ246. How about the third-hand? A. They are still less interested.

XQ247. You wouldn't expect his recollection of these things to be very accurate? A. No.

XQ248. In the Rhinelander machine, when you turned the screw to raise the adjustment of the breast-roll, so that it would bring the breast-roll up that two inches, did that affect the position of the suction-boxes? A. Yes. It doesn't affect the position of the boxes—that is, it doesn't change the position of the boxes, but it does the wire, takes the wire away from the boxes.

XQ249. Well, can't you raise the wire as much as two inches without its being necessary to move the suction-boxes? A. Well, two inches, it would work when the stock is on the wire, as the suction draws the wire down to the boxes then, but when the stock leaves the wire, releases the suction.

XQ250. So you have to raise the suction-boxes to make it

work with even as much as two-inch pitch? A. Yes, a little.

XQ251. Now, tell us as closely as you can when it was that that wire was raised on the No. 2 machine at Rhinelander, was it? A. On the No. 1.

XQ252. No. 1 machine raised that two inches, adjusting the breast-roll with the screw? A. I don't remember exactly.

XQ253. Well, tell us as near as you can; was it 1904 or 1905? A. Oh, you mean the year?

XQ254. Yes. A. 1905.

XQ255. What part of the year? A. In the summer.

XQ256. How do you remember that? A. I was working on the machine at the time.

XQ257. What was your job on the machine at the time? A. I was machine tender.

XQ258. How do you know it wasn't 1906? A. I went to work there in 1904 and back-tended about a year, and then I was put on as machine tender—promoted to machine tender.

XQ259. Were you machine tender in 1906, too? A. Yes, sir.

XQ260. How do you know it wasn't 1906? A. Because it was done some time before I left there, and I left—anyway, the pitch was put on shortly after I went on as machine tender.

XQ261. By that you mean a couple of months after you went on as machine tender? A. Yes, something like that.

XQ262. As I understand it, the first thing that was done was to raise the wire on the No. 1 machine by means of the screw adjustment two inches? A. Yes, sir.

XQ263. What was the next thing done? A. To raise it on blocks.

XQ264. On the No. 1 machine? A. Yes, sir.

XQ265. Blocks of what thickness? A. I don't know—about eight inches square, I think.

XQ266. At the breast-roll end? A. Yes, sir.

XQ267. And smaller blocks towards the other end? A. Yes, sir.

XQ268. Were the suction-boxes blocked up? A. Yes, they would have to be in order to bring them up that much.

XQ269. Now, when was it that first blocking was put in under the No. 1 machine? A. A little later, after it was raised by the adjustable screw.

XQ270. How much later? A. I don't know exactly.

XQ271. A week or two? A. Something like a couple of weeks; I don't know exactly.

XQ272. That was in 1905? A. Yes, sir.

XQ273. Now, what was the next step taken? A. To raise

it up still more on blocks.

XQ274. How much was the additional raise that was given to it? A. About ten inches.

XQ275. Making a total of about 16 inches? A. About that.

XQ276. Did you say the first blocks were six inches high? A. About six inches, somewhere around five or six inches.

XQ277. Now, that was done on the No. 1 machine before any change was made in the No. 2 machine at all? A. Yes, sir, as near as I can remember.

XQ278. How long a time elapsed between the time when the first blocks were put in the No. 1 machine and the time when the second blocks were put under the No. 1 machine? A. I don't know exactly, but I think something like a week or two.

XQ279. So those changes were all made in the summer of 1905 in the No. 1 machine? A. Yes, sir.

XQ280. The machine was speeded up accordingly, was it? A. Yes, sir.

XQ281. Now, how long after that was it that the breast-roll in the No. 2 machine was raised? A. I don't remember that.

XQ282. You don't remember that the No. 2 machine was ever raised? A. I know it was raised, but I don't know how long after.

XQ283. Did that No. 2 machine have this adjustment for raising the breast-roll two inches by a screw? A. I think it did.

XQ284. Do you remember whether that adjustment was used or not? A. No, I don't; I wasn't very much interested in No. 2 side; I was busy on the other side.

XQ285. You don't know when that first blocking was put under the No. 2 machine? A. No, I don't know.

XQ286. Some time before you left there? A. Yes.

XQ287. How thick was the blocking under the No. 2? A. About the same as No. 1.

XQ288. You mean 5 inches, 6 or 16? A. I think about 8 inches square.

XQ289. Was it ever changed after that? A. Later on, there were iron blocks put under.

XQ290. Of the same height as previously? A. Yes.

XQ291. That means 8 inches? A. 16 inches in all.

XQ292. 16-inch blocks in the No. 2? A. Now, the iron blocks put in later—I don't know exactly whether they put them in the same height as the others, or made them a little lower. It seems to me there was a time they thought that they had a little too much pitch on it, and they dropped it a little. I

don't remember that.

XQ293. Do you remember whether that change in the No. 2 machine was made in 1905 or 1906? A. In 1905, I think.

XQ294. What part of the year 1905? A. I think it was done shortly after the No. 1 machine was found satisfactory.

XQ295. Why did you leave the Rhinelander Paper Co.? A. I had trouble with the night foreman.

XQ296. You were discharged? A. Well, Mr. Eibel told me that he was ordered to look for another man, and he told me I could stay until they got another man, or either quit and not have the name of being discharged.

XQ297. Who was the night foreman? A. William Coyle.

XQ298. What was Mr. Eibel's position in the mill at the time these pitches were put in? A. Superintendent.

XQ299. Alpine took orders from him? A. I think; I am not sure. I think it is mostly customary for the boss to take orders from the superintendent.

XQ300. When Alpine told you about this idea of his, did that strike you as something remarkable? A. Well, no.

XQ301. How do you happen to remember it? A. I remember him speaking to me about it.

XQ302. Was it a strange thing—is it not a strange thing for you to remember that so long? A. Not exactly, no.

XQ303. You haven't thought of it from that time to this? A. Oh, yes, I have.

XQ304. It didn't strike you as anything remarkable? A. Not at the time.

XQ305. You were perfectly familiar with the idea? A. I wasn't familiar with it; I didn't think about it enough to—to think much about it.

XQ306. You didn't think there was anything good in it? A. I could see there was good in it, after Alpine pointed out to me the change it made; but I wasn't enough advanced in the business as machine-tender to be very much interested in the point of it.

XQ307. Had you ever seen anything like it in any of the other mills you had been in? A. Yes, I had seen an adjustable frame that is where they adjusted the frame like they did at Rhinelander, before they put it on blocks.

XQ308. Did you ever see any blocking under any machines in any of the other mills? A. I don't remember; as back-tender I wouldn't be very much interested in that end of it.

XQ309. What did you understand to be the purpose of that adjustment that there was on those machines at Rhinelander to raise the breast-roll a couple of inches? A. What the mills

would do?

XQ310. What was the purpose of making the breast-roll adjustment above and below the level? A. So as to get the stock to flow with the speed of the wire.

XQ311. That is your understanding, is it? A. Yes.

XQ312. Then what was there new about this idea that Alpine told you about? A. There was nothing new about it, as far as they had gone with the adjustable frame, but I expect there was no one ever thought they could raise it as much as they raised it.

XQ313. When you went to Grand Rapids, to the Consolidated Company's mills there, after you left Rhinelander, did you find the wires pitched there? A. Yes.

XQ314. How much of a pitch did they have there at that time? A. I think about eight inches.

XQ315. When was it you went there? A. 1906, October.

XQ316. In November, 1906? A. October.

XQ317. They got their idea from Rhinelander, had they? A. I don't know.

XQ318. When you went to Sartell, Minnesota,—the Watab Company, had they their wires pitched? A. Yes, sir.

XQ319. How much of a pitch did they have? A. About 12 inches, I think.

XQ320. When was it you went there? A. I think 1913, in the month of March.

XQ321. What machine did you work on at the Kimberly-Clark place at Niagara, Wisconsin? A. No. 2.

XQ322. How many machines were there there? A. Two.

XQ323. Did you ever work on the No. 1? A. No, sir.

XQ324. Do you remember Alpine's ever putting a plank under the wire of the machine there? A. A plank under the wire?

XQ325. Yes, in place of some of the table-rolls? A. No, I don't.

XQ326. Did you ever hear him speak of such a thing? A. I have seen it in other mills, but don't remember it there.

XQ327. Did Alpine propose to do that in the Rhinelander mill? A. Not that I know of.

XQ328. You didn't hear him say anything about it? A. No, sir.

XQ329. What was it done for in other mills? A. To help carry the water down the wire, farther down toward the suction-boxes.

XQ330. And prevent its draining away? A. To keep it in the stock; prevent it from draining out.

XQ331. Do I understand that your understanding of what Alpine told you is he wanted to get the stock out on the wire at the speed of the wire? A. To try to get it to take up the same speed as the wire.

XQ332. To try to get it started on the wire the same speed as the wire? A. Well, I don't know as it is exactly started out, but to get it to travel the same speed. Of course when it starts out, it travels faster, and gradually slows down, as it goes down.

XQ333. That is, it starts out—it slows down on the wire? A. Yes, the speed of the stock slows down as it travels down farther.

XQ334. Did Alpine explain that to you? A. No; but he had explained to me, as I was saying, that the speed is greater at the beginning than it is later on. He did explain to me that what he was trying to do was to get the stock to travel the same speed as the wire.

XQ335. He told you also the speed of the stock at the beginning was greater than it was later on, down the wire? A. No.

XQ336. Well, how could he explain his idea to you, without telling you that? A. As I told you, he was trying to get the speed—to get the stock to travel the same speed as the wire. As the machine ran faster, the wire was traveling—had a greater speed than the stock had; and he told me what he was trying to do was to raise the wire and get the stock to flow by gravity.

XQ337. Have you ever seen the Eibel patent? A. No, I have not.

XQ338. Had it read to you? A. I read it in the paper, Trade Journal, some years ago.

XQ339. When? A. Shortly after it was patented, I think. I am not sure.

XQ340. When was that; how long ago? A. I don't know just exactly.

XQ341. Was it about 1907? A. I don't know.

XQ342. Did you ever talk to Mr. Eibel about this invention? A. Not that I remember of. I don't know as I ever talked to Mr. Eibel since I left Rhinelander.

XQ343. Was Mr. Eibel present when those changes were made in the machine? A. I can't say; they were made on a Sunday.

XQ344. Did you have much conversation with Mr. Eibel about any matters when you were working there at Rhinelander? A. I don't remember.

XQ345. You got your orders from Alpine? A. Yes, sir,

most of them.

XQ346. Had no occasion to talk with the superintendent? A. Sometimes he used to give his orders, but he wouldn't do anything like that—take up with us anything like that that I know.

XQ347. He would take that up with Alpine? A. I think so; I am not positive.

XQ348. State again what was it you said it was Alpine told you his idea was? A. To get the stock to flow the same speed as the wire.

XQ349. Did he accomplish that by the two-inch pitch? A. Not exactly, but to a certain extent, he did.

XQ350. What difference did it make in the appearance of the sheet? A. It done away with some of the waves, and made a more even sheet on the wire.

XQ351. Was the machine speeded up between the time when the wire was running flat and when the two-inch pitch was put on? A. Some.

XQ352. How much? A. I don't know exactly.

XQ353. Was it speeded up? A. It was speeded up.

XQ354. Well, how much? A. I don't know how much.

XQ355. Was the speed the same when it was running with the two-inch pitch that it was when there was the eight-inch blocking in? A. No, that increased the speed, each time they raised the wire.

XQ356. How much? A. I don't remember exactly how much. I know what the limit was, the average speed that they run after it was raised.

XQ357. What was that? A. I think they used to run somewhere around between 560—at one time they had it above that, for a short time.

XQ358. Was anybody else present when you had that conversation with Alpine that you told about? A. No, not that I remember of; he and I were standing together at the wire. I didn't see anybody else.

XQ359. As back-tender, don't you get around to the wet end of the machine? A. Some.

XQ360. Would you be apt to notice whether there was blocking under the wet end of the machine, as back-tender? A. Such blocking as that;—the majority of them, I think, would notice it.

XQ361. They would notice it, but wouldn't be in position to know the exact figures? A. No.

XQ362. When you raised the breast-roll by that two-inch adjustment, did you ever make any other adjustments in the

machine? A. Some.

XQ363. What? A. Not with the two inches; not at that time. We raised that while we were running. We didn't make any changes at that time.

XQ364. You made that while the machine was actually running? A. Yes, sir.

XQ365. When you raised the breast-roll, what happened to the apron-board? A. Well, the apron-board, that come nearer the wire as you raised the breast-board, and I didn't see what Mr. Alpine done with the apron-board, but in some cases, the apron board is half an inch from the wire, and in some cases it is higher; I have had it higher and I have had it nearer the wire. Most apron-boards are on hinges, and they can be blocked up easily. I didn't see whether Mr. Alpine changed the apron board or not at that time.

XQ366. The usual practice up to the time this change was made at Rhinelander, was to run the wires flat, wasn't it? A. Yes, in some cases; in others, not. They had adjustable frames—on book paper, on finer grades, at former times, they used to run below the level.

XQ367. That is up hill? A. Up hill; and then at times, they used to raise it above.

XQ368. By these adjustments? A. Yes.

XQ369. When this breast-roll was raised at Rhinelander, you say that they got more speed? Did it also improve the appearance of the paper; did it? A. It gave it a more uniform formation.

By consent of counsel, signature waived.

Afternoon session, two o'clock.

P. R. THOM,

a witness called on behalf of the defendant, being first duly sworn, deposes and says, in answer to questions by Mr. Paul as follows:

Q1. What is your name? A. P. R. Thom.

Q2. How old are you, Mr. Thom? A. 67.

Q3. Where do you reside? A. Appleton, Wisconsin.

Q4. How long have you lived at Appleton? A. Since 1883.

Q5. Are you at present engaged in any active business? A. Not active, no sir.

Q6. What has been your business? A. Paper mill superintendent and general superintendent.

Q7. When and where did you first work in a paper mill?

A. I worked in the first paper mill at Alexander Baillie & Sons, Aberdeen, Scotland.

Q8. How old were you at that time? A. I went into that mill when I was ten and a half years of age.

Q9. What did you do at that time? A. I attended to seeing the stock brought up on the elevator; it was a crane really at that time.

Q10. How long did you remain working in that mill? A. I left there in 1865.

Q11. When did you come to this country? A. 1868.

Q12. Had you been working in a paper mill all the time until you came to this country? A. I had.

Q13. From the time you went into this mill? A. I had.

Q14. And what various kinds of work had you done in a paper mill? A. Well, I have done practically everything in it.

Q15. I mean up to the time you came to this country? A. Oh, up to that time, I had back-tended on machines; I had run on washing engines and helped on beating engines.

Q16. You came to this country in— A. 1868.

Q17. 1868. A. Yes.

Q18. What did you do first when you came over to this country? A. I got a job helping on the beating engines—the old Chelsea Mills, Greenfield, Illinois.

Q19. That was a paper mill? A. That was a paper mill.

Q20. And how long did you stay there? A. About a year and a half or thereby.

Q21. What did you do after that? A. I went into a machine shop; apprenticed myself as machinist.

Q22. Where was that machine shop located? A. South Windham, Connecticut.

Q23. What kind of machinery was built in that machine shop? A. Paper machines, beating machines, washing machines, water wheels, and rubber machinery, too—I don't understand the making of rubber boots and shoes, but they made machinery for that, too.

Q24. How long did you stay in the machine shop? A. Three years; served full apprenticeship.

Q25. And after that, what did you do? A. I went to the Old Berkshire Mills, in Dayton, Massachusetts, and I looked after their machinery for about—I think it was about four months.

Q26. That was a paper mill? A. Yes, sir, the Old Berkshire mills at Dayton, Massachusetts.

Q27. Now, without going into detail, I wish you would start from that point, Mr. Thom, and give us a general outline

of your experience in paper mills and with paper machinery. A. I left there after being employed about four months, and went to South Bend, Indiana, to have charge of a mill for Beach & Kiddie, at South Bend, Indiana; that was in the year 1875, along toward the last of the year or the first of January—no, it was 1874, about the last of December, or the first of January in 1875. I was there until May, 1876. I went back to Connecticut and I did some work for Teigerts & Davis, putting on Fourdrinier parts on a cylinder machine they had; and that took me until along about the first of August, 1876. I then went to the Bowden Paper Company at Topsham, Maine, and I was there, I think, until the first of January, 1877. I then went back to South Bend again, and run the same mill. I stayed there the second time until about the first of January, 1879. I then went back to Illinois, and a young gentleman and myself, we leased a mill at Griswold and conducted and operated it for two years and a half. I then went from there to a small mill—the lease ran out where we was—I went to a small mill at South Windham, and conducted and operated that for about something like a year, I think, and then I went out to Waddington, N. Y., to take charge of a mill owned by the estate of Mrs. Gills. That was in 1882. I think I went there in August of 1882; I am pretty sure it was. I was there until the following May, that is of the next year. The mill burned down. I then came out—that brings me to 1883—I then came out here in 1883 with the Kimberly-Clark Company, and am interested with them ever since.

Q28. These mills you speak of, were all paper mills? A. Yes, they were all paper mills, yes.

Q29. Your business has been then in connection with paper mills and paper making machinery during all of this time? A. Yes.

Q30. The Kimberly-Clark Company located at Neenah, having its office in Neenah? A. Yes, sir.

Q31. How many mills did that company have in 1883? A. In 1883, they had the old Neenah mill, Globe mill, Atlas mill, Vulcan mill—four. That is all the mills they had.

Q32. Were those mills increased in number from time to time? A. Yes.

Q33. And in size? A. Yes.

Q34. How many mills does the Kimberly-Clark Company operate at this time? A. Over and above these—that was four, wasn't it—Neenah, Globe, Atlas, Vulcan—that was four mills. Over and above that, today they have the Badger mill, Tulula mill, Niagara mills, Kimberly mills and the Neenah Paper

Company. It is called the Neenah Paper Company, but they are the owners.

Q35. That makes nine mills in all? A. Yes.

Q36. Do they operate Fourdrinier paper machines in these mills? A. In all of them but one. They are all Fourdrinier machines but one that makes paper. They have two cylinder machines, but one of them dries pulp.

Q37. How many Fourdrinier machines does the Kimberly-Clark Company operate? A. There is sixteen machines, I think it is.

Q38. Were they operating Fourdrinier machines in 1883, when you came with them? A. Yes, sir.

Q39. What was the size of the Fourdrinier machines at that time? A. The widest they had at that time was 86 inches.

Q40. And about what speed were they ordinarily operating? A. At that time, they didn't have a machine that was running 200 feet a minute.

Q41. Did they have Fourdrinier machines in the mill in which you first began working in Scotland? A. Oh, yes, they didn't have anything else.

Q42. How many machines did they have there? A. Six.

Q43. What was the size of those machines? A. The widest was 76.

Q44. 76 inches? A. Yes.

Q45. And about what speed did they operate there? A. That was all high-grade papers, bond, high-grade writings. Them machines, I never run—they never run up to a hundred feet at that time, these machines I speak of. The quality of the paper—they hadn't made progress enough to do it.

Q46. When did the Kimberly-Clark Company acquire the Niagara mill? A. Well, it was in 1898, that is to the best of my recollection, they bought that mill in 1898.

Q47. Were they using Fourdrinier machines there? A. Yes, one.

Q48. What, if anything, was done with the Fourdrinier machine or machines in the Niagara mill at any time, in reference to giving it a pitch—giving a pitch to the wire?

Mr. Lyman: Objected to as inquiring about something for which no basis is laid in the answer.

A. The machines was set without any pitch, but there was a superintendent came there and he asked me for the privilege of raising the machines, and I asked him if he thought he would get enough benefit from it to justify it and he said, "Yes, I think we can do better." I said, "I think you can do some better; go ahead." I said, "How much do you propose?" He said

he would raise it four inches anyhow. He raised them four inches.

Q49. When was that?

Mr. Lyman: Same objection; and it is stipulated this objection is taken to all questions along this line without further repetition.

A. 1902.

Q50. What was the name of this superintendent? A. Leuthwait.

Q51. What is his name? A. I think his initials was A. L. Lewthwaite; his first name was Alex, and I am not sure of the middle initial.

Q52. It may have been A. J.? A. I think it was; I have forgotten what his middle initial was.

Q53. How often were you at the Niagara mill in 1902, or along about that time? A. Let's see, now—it was in 1901 we raised the machines, 1901, because when I went there—I went there in 1902, about the first of January, and I stayed there and ran the mill until the next October—so I didn't raise them, but I had—that was in 1901, because I remember pretty well, I had to go up in the month of January, when he left there.

Q54. Lewthwaite left there in January, 1902? A. Lewthwaite left there in January, 1902, that was early in the month of January.

Q55. And you went up there and ran the mill until—A. October.

Q56. Were you there all the time? A. I was there all the time; I was gone probably—I was down here—they sent for me to come down. I was here three days; that is the longest I was away from the mill during that time.

Q57. You were there practically all the time? A. I was there practically all the time.

Q58. Did you spend your time in the mill? A. I spent my time in the mill.

Q59. You were in charge of it? A. I was in charge of it.

Q60. Now, how many of these machines were blocked up? A. Two.

Q61. What was the arrangement of the blocks? A. They were tapering, to meet the condition of the raise of four inches.

Q62. The breast-roll was raised that four inches? A. Yes.

Q63. And what about the suction-boxes; what arrangement was made with reference to them? A. They had no trouble about adjusting them for that amount of pitch.

Q64. They were adjusted to meet that amount of pitch? A. Oh, yes.

Q65. Do you remember how that was done? A. Yes.

Q66. You may state. A. We took a wedge—a piece of wood tapering, and drew the box up against the permanent rail, and that made the pitch.

Q67. How did that leave the top of the box, with reference to the wire? A. The wire had to lay perfectly flat to the box to get suction.

Q68. And did that bring the top of the box flat against the wire? A. Oh, yes.

Q69. Now, were those machines in operation right along while you were there? A. They were.

Q70. What kind of paper were you making? A. We made wall paper, newspaper and manilas—manila papers.

Q71. On both machines? A. On both machines.

Q72. About what speed did you operate those machines during the time you were there? A. Well, that depended entirely on what we were making. Wall paper we used to run from 275 to 300 feet, and manila papers and light papers, that is not to exceed 30 lbs., we were running from 450 to 475 feet; it all depended on the weight.

Q73. And the newspaper? A. We were running newspaper from 450 to 475.

Q74. You left Niagara in October, 1902? A. Yes.

Q75. Where did you go then? A. I came back to Appleton. I was general superintendent all the time that I was there, although I didn't give any attention to the mills here. I came right back here to look over the mills.

Q76. You were general superintendent of the Kimberly-Clark mills before you went up to Niagara? A. Yes.

Q77. And general superintendent after you came back? A. Yes.

Q78. But during the months you were up there, you looked particularly after that mill? A. Yes.

Q79. Now, as general superintendent, after you returned from Niagara, did you look after the Niagara mill as well as the others? A. Yes.

Q80. And do you know whether this blocking was continued at Niagara? A. The blocking was continued to be used as long as I was going around the mills. I don't know what is under there today. I haven't been active in the mills for the past year and a half or two years.

Q81. How long do you remember that they continued to use that same four-inch blocking at the Niagara mill? A. To the best of my knowledge, they were using it right along, until some time in 1916; they extended it, but I don't know how much.

That was only hearsay that I knew they had extended them; I think they claimed 12 inches, something like that; but I don't know myself personally.

Q82. I am only asking about your own personal knowledge. How long, so far as you know personally, did they continue to use the four-inch blocking? A. They continued to use the four-inch blocking as long as I had anything to do with the mills; that is up to two years ago.

Q83. And did they continue to make the same kind of paper at the Niagara mill? A. Yes, up to that time.

Q84. Now, I want to direct your attention to the mill at Kimberly. The Kimberly-Clark Company, had they a mill at Kimberly? A. Yes.

Q85. How far was that from Appleton? A. About four miles.

Q86. By what name is that mill at Kimberly known? A. The Kimberly Mills.

Q87. When you speak of the Kimberly Mills, you refer to that mill of the Kimberly-Clark Company at Kimberly? A. Yes, sir.

Q88. How long has that mill been in operation? A. The last operation—it was rebuilt; do you want to know about that?

Q89. Yes, give us a little history. A. That mill went into operation about 1890; but was burned down in 1900. It was rebuilt and put in operation again in 1905.

Q90. When the mill was rebuilt, were there any Fourdrinier machines put in there? A. Yes, there were two.

Q91. By whom were those built? A. The Beloit Iron Works.

Q92. When were the machines put into the mill? A. They arrived in 1904, and were set up during the winter of 1905.

Q93. How early in 1905 was that mill started up? A. In May, 1905.

Q94. With these machines you were speaking of? A. Yes, sir.

Q95. Did those machines have any provision for adjusting the breast end roll, the Fourdrinier?

Mr. Lyman: The question is objected to on the ground that the matter inquired of does not relate to anything set up in the answer; and it is stipulated that this objection may be regarded as taken to all subsequent questions along this line, without further repetition.

A. Yes, they did.

Q96. What means did they have for that purpose? A.

There was a mechanism for that purpose.

Q97. By what means could it be operated? A. By a hand-wheel or worm wheel, a worm-gear and worm-pinion.

Q98. What was the amount of the adjustment? A. From level—it was below level, it was two inches below level to six inches above.

Q99. It had a possible adjustment of six inches above level and two inches below? A. Yes, sir.

Q100. Was there any provision for adjusting the suction-boxes? A. Only the same provision that we have always; they have independent adjustment.

Q101. Were there any specifications provided for the construction of those machines? A. Yes, sir.

Q102. By whom were those specifications arranged or determined? A. I arranged the specifications.

Q103. I call your attention to two papers, which I hand you, and ask you if you will state what those are? A. I can tell from the general commencement of them, that I made the specifications—that I made the written specifications, and these were transferred. I didn't dictate these specifications, only they took them from my specifications, which I know.

Q104. Are these the provisions for those two machines; look them over? A. Let's see what is the signature there. (Examines papers.) Yes, these are the specifications for these two machines; one is 145,142; that is the breast and couch rolls, that's what that means. I know from that.

Q105. And the other one? A. No. 122,125.

Q106. Those refer to the breast and couch rolls also? A. Yes, sir.

Q107. These specifications are dated April 25th, 1904? A. Yes, sir.

Q108. Is that about the time the machines were ordered? A. That is the time they were ordered.

Q109. And attached to one of them is a contract which provides that one machine shall be delivered f. o. b. cars, Kimberly, Wisconsin, not later than December, 1904, and the other not later than January, 1905, January 1st? A. Yes.

Q110. Were they delivered within those dates or prior to those dates? A. My recollection is that some parts of the second machine came in later than that, but not much later.

Q111. So the machines were received about the time the contract provided? A. Yes.

Q112. Now the contract contains this provision—"The builder further agrees that not only shall the machines be delivered strictly according to the specifications referred to herein, but

in every particular shall be subject to the approval of the general superintendent of the purchaser, P. R. Thom." Are you the P. R. Thom there referred to? A. Yes, sir.

Q113. And did you approve the construction and detail of the machines? A. I did.

Q114. The specifications contain this provision: "The entire Fourdrinier end made adjustable from the suction-box to the breast-roll, so as to change the pitch of the wire, by turning one crank." A. Yes.

Q115. Were the machines so constructed? A. Yes, sir.

Q116. And the amount of the pitch could be given as you have already stated? A. Yes, sir.

Q117. The adjustment was from two inches below to six inches above? A. I don't remember whether the two inches below was the amount, because we didn't think so much of below as above.

Q118. But I am asking as to how it was actually constructed? A. It was constructed so we could go down two inches if we wanted to.

Q119. And how much above? A. Six inches.

Q120. The specifications also contain some provision in reference to the suction-boxes? A. I have no recollection of making any especial mention of the adjustment of the suction-boxes, from the fact I knew there was no difficulty about that on that pitch, with the usual construction of the machine.

Q121. I call your attention to a provision in reference to the suction-boxes, in which I find this statement: "Each box made independently adjustable, and arranged so deckle-straps cross two boxes, right and left ends with expanding and contracting heads." What is the adjustment referred to; is that the suction-boxes? A. The adjustment you are referring to is the adjustment of raising and lowering the box rail.

Q122. Is that the adjustment referred to in the specifications? A. No.

Q123. What is this adjustment referred to in the specifications? A. The right and left head mentioned is for the adjustment of the box. That determines the width. You have to have a head in the box to keep the air from leaking.

Q124. This adjustment referred to in the specifications, is the adjustment that is changed to accommodate the width of the paper? A. Yes, except for where it says—just read it again.

Q125. Part reads this way—"Each box made independently adjustable." A. That adjustment is independent; each box could be adjusted independent of the others. And the other

part has no reference to the box in any way, except the width of the paper.

Q126. I don't understand about this box; each box made independently adjustable. A. There are four boxes and they have to be independently adjustable; they couldn't be operated if connected together in any way.

Q127. That doesn't refer to the adjustment to accommodate the top of the box to the pitch of the wire, when the wire is changed? A. No, nothing to that at all.

Q128. But the boxes were so constructed that they could be changed to bring them to pitch of the wire? A. Oh, yes.

Q129. Now, when those machines were first put in operation, what adjustment was used? A. Four inches.

Q130. That was in the spring of 1905? A. Yes, sir.

Q131. How long did you continue to operate that at the pitch of four inches? A. I think we operated them until 1910 that way.

Q132. Then what did you do? A. We raised them about two inches more.

Q133. With the same adjusting screws? A. Yes, sir.

Q134. Those screws have never been changed since the machines were put in? A. No.

Q135. How are they running today or when you last saw them? A. When I left there, they were running at six inches.

Q136. When did you last see those machines? A. The last time I was in the machine room—let's see, March of 1916.

Q137. And they were running at six inches pitch at that time? A. Yes.

Q138. And what about the suction-boxes, were they brought up against the wire? A. The same adjustment they were when we had them at four inches.

Q139. Now, Mr. Thom, assuming that you have a machine running level? A. Yes.

Q140. With the wire level and the stock coming onto the wire, what is the effect on the stock of any speeding of the wire? A. High speeds, the natural tendency is for the wire to draw away from the flow of the pulp.

Q141. What was the purpose, referring for instance to the Niagara mill, what was the purpose of blocking up this machine four inches? A. To get a better formation.

Q142. How did you do that? A. By blocking up.

Q143. What was the effect on the operation by the blocking up? A. We did get some better formation.

Q144. Can you explain why you got a better formation with that blocking up? A. Yes.

Q145. Will you do that? A. At the speed we was running, say 450 to 475 feet—we thought we would get a better formation by raising the Fourdrinier, so as to help the flow or velocity of the pulp and consequently the formation would come better that way; we would be relieved of the drawing of the pulp as it entered onto the wire.

Q146. The drawing of the pulp by the wire? A. Well, yes, when it was level; that is where the better formation came in.

Q147. And you overcame that by raising it up four inches, the pitch? A. Yes, sir, we got some benefit from it.

Q148. Now, what was the effect of the raising up of the wire in the Kimberly mill in those machines? A. We didn't get effect from that, on account of the qualities of papers we were making, until we passed 300 feet.

Q149. Explain why that was. A. The pitch on a slow running machine, really—the term is, we call it "barred paper." It bars the paper, especially with the heavier weights. You see we was running a different grade of paper entirely from news, heavier in weight. Newspaper, so-called, is on basis 24, 26, 30 or 32 lbs., something like that. We ran book and magazine papers 40, 50, 60, 70, 80, all different weights. That is a different proposition entirely; and with the pulp being much more denser on the wire than when making news, it barred the sheet, corrugated it, so that was one reason why when we passed 300 feet, and we calculated and knew all the time we were going better than over 300 feet on the book papers at Kimberly, on the same weights—that is why we got machines pitched in that way.

Q150. Up to 300 feet, could you run that quality of paper on the level? A. Yes, and to better advantage, especially on the heavier weights.

Q151. When you got beyond 300 feet, what did you want? A. We wanted pitch.

Q152. And why? A. Because of better formation.

Q153. Will you explain for the benefit of the court, Mr. Thom, what you mean by a better formation, in paper; how is that term used by paper makers generally? A. Paper makers when they are looking for good formation, the explanation is—the paper maker looking for good formation, holds the sheet between him and the light. If it is close and looks like close formation, he says that is good formation; but if it is cloudy and very light—if there was a newspaper around here, we could see the difference very readily—that is what he means by better formation.

Q154. And how is that—what causes that better formation?

A. Well, in that case, there are several things that causes better formation. Slow stock makes better formation than free stock; and short stock makes better formation than long stock, that is long fiber I mean. Slow speed makes better formation than higher speed. I can go on indefinitely and tell the different things that makes good and bad formation.

Q155. What is in the arrangement of the fibers that makes a difference between what you call a good formation and otherwise? A. The arrangement of the fibers to make good formation—has to be of such consistency that, as the paper makers term it, it will carry the water well forward on the wire. If the water leaves the wire quickly, in a very short space of its travel, make up your mind you will have a poorly formed sheet. This pitch arrangement helps the formation, because the water is carried much farther distance on the travel of the wire, consequently that helps to make better formation.

Q156. Do you know what pitch is used in the other Kimberly-Clark mills? Other than the one down here at Kimberly? A. The Neenah Paper Company makes all high-grade papers; they don't need pitch. The other mills from time to time they are changing very much from light weight to heavy weight papers. That means high and low speeds, and they have not got the pitch on these machines.

Q157. Did they have any pitch on the other machines? A. Not any of the others, on account of this condition of changing from light weight to heavy weight. You see, they have to run high speed and low speed. A great deal of the time, they are running on low speed instead of high.

Q158. Those two machines at Kimberly mill were the only ones operated by the Kimberly-Clark Company that have a pitch as high as six inches? A. No, there are two more now; they have four in that same mill.

Q159. That mill is the only one that has a pitch as high as six inches, of the Kimberly-Clark Company? A. Yes.

Q160. Are the two other machines that they have out in that mill substantially the same as the first that were put in? A. The four are just the same; the third is made by another concern. There possibly is a little difference, but the pitch is there the same.

Q161. It has the means for changing the pitch? A. Yes, but it is not the same as on the others; it was built by Bagley & Sewall, and they didn't put on quite as elaborate an arrangement as the Beloit people did. The Beloit people, you understand, built the fourth one, and it is the same as the other first two.

Q162. Has the Kimberly mill been operated right along since 1905? A. Yes, sir.

Mr. Paul: The contracts shown the witness are marked for identification L and M.

Mr. Paul: It is stipulated that copies, to be compared and certified by the reporter by whom this testimony is taken, may be substituted for the original specifications, Exhibits L and M, the said originals to remain in the possession of counsel for the defendant, and to be subject to production at any time on the taking of further testimony or on trial of the case.

Mr. Lyman: Or upon request, upon reasonable notice.

CROSS EXAMINATION.

By Mr. Lyman:

XQ163. I notice this Exhibit M—special specifications. What does that mean, Mr. Thom? A. That special specifications—in some respects, we didn't know who was going to build the machines, and there was some things about the machines we wanted, we didn't want put in the hands of every bidder that would bid on the machines; and that is what that meant. It was in respect partly to pitch, but not so much to pitch as to dryers, the dryer section. That is where that special specifications came in.

XQ164. Was that special specification annexed to the exhibit? A. Yes, to the one that built the machines; there was never anybody got them.

XQ165. Is that part of the papers you have before you? A. No, there is nothing in there about the dryer section. That is the special part of the specification relating to the dryer section, more than anything else.

XQ166. I would like to see that special specification? A. I don't know whether the Beloit people—that is not the Beloit's specification; that is the Kimberly-Clark's—whether they have preserved that specification, I don't know.

XQ167. Who ought to preserve that? A. I have a copy of it; I have a copy of the dimensions. That was simply in regard to the graduating of the dryers, that special specification.

XQ168. I see that these specifications both call for a machine to be in all respects the highest standard of the most approved paper machines. Did the machines conform to that requirement? A. Yes, they did; the operation of the machines was O. K'd. by me, and paid for at once when the payment was due.

XQ169. What were these machines designed to manufacture; what grade of paper covered by these two specifications? A. We calculated that we would have to run news on probably

one of them or both machines when we first started, one especially, because Mr. Kimberly always said it was throwing 40 or 50 tons of paper on the market pretty suddenly, and we might have to diversify the qualities. We knew if we were going to run news, we ought to have the form we could get some benefit from; we put the adjustment on, so that if we wanted to run on heavier papers, which we had to do—that is when we did run heavier weight papers.

XQ170. I don't see anything in these specifications about this two-inches below and six inches above, do you? A. I don't remember whether that was embraced in the special specifications or not.

XQ171. Well, let's see that special specification? A. That is only the dimensions of the graduating of the dryers. You will find, as I told you, when we made these specifications—when the specifications were given to the different parties that were going to bid, we told them that there would be a special requirement in the dryer section, and that that would be given to the one that got the machines to build, but that it would not be put in the hands of everyone. We gave them to understand it would only be a question of graduating the dryers, but we didn't want to let everybody know we were graduating our dryers. Of course if we had given everyone a specification, they would have all known what it was. So that is what the special specification means; and I don't remember whether I brought in the pitch part or not, but any way, the pitch was covered by mechanism that was put on the machine. We know that, because they were all so arranged.

XQ172. You wouldn't have any objection to hunting up that special specification? A. There is no specification, only the measurements in connection with the dryer section. I have that, I know.

Mr. Paul: You have no objection to looking up and seeing whether you have anything?

The Witness: I have no objection, only I know I haven't anything except a sketch of the graduation and size of the dryers.

Mr. Paul: Will you look for that tonight, Mr. Thom?

The Witness: Yes.

XQ173. I want to see a copy of whatever is referred to by that term "Special Specification." A. Yes.

Mr. Paul: And anything you have of that kind, you will look for tonight?

The Witness: I don't want to let that get out of my hands; that belongs to me. Will it be sufficient if you get a copy of it?

XQ174. Didn't these come from your files? A. Didn't these?

XQ175. Didn't these two exhibits come from your files? A. Oh, no, they have had them in their possession right along.

XQ176. Who? A. The Kimberly-Clark Company.

XQ177. What was the speed at which these machines were calculated to be run? A. At Kimberly?

XQ178. Yes; these two covered by these specifications that you have produced? A. They were to be speeded from 50 to 300 feet, I think it was.

XQ179. I see that both these specifications say that the rails are to be in two lengths, "so that suction-boxes are stationary." What does that mean? A. That statement means that the rails didn't used to be separate; these rails didn't used to be separated at all. They used to run the whole length clear out to here, and the suction-box, of course, vibrated with the rail; that's what that means. (Witness refers to Fig. 1 of Moore & White patent No. 809,832.)

XQ180. Well, what means was provided then of raising those suction-boxes when you adjusted the breast-roll to the position above the level? A. The suction-boxes hung from that rail; there is a bolt comes up through the rail at each side, and there is an off-set. This fine line here shows a piece of wood. There is an offset in the box, so it is an easy matter to take up—to taper a piece of wood and draw the box right up to the rail, and the wood, you see, makes the line of the pitch; the line of the wire follows the face of the box; and that is the way we got it.

XQ181. By putting special blocking under the suction-boxes, of wood? A. Under the rail, between the end of the boxes and the rail. That box is hung right from that rail, a bolt running up at each side, perfectly independent of the other one. There is a set-screw at each side of the box, at these two points. If you don't have that wood, all you would have to do is to set the set-screw to tilt the boxes, but we always preferred the wood, because it held it more permanently.

XQ182. You say the adjustments in those machines are adjusted the same now as when they were put in? A. Yes.

XQ183. What machines are they that are covered by these specifications? A. One, two and four. No. 3 has got the pitch just the same, but the Bagley & Sewall people built it.

XQ184. And No. 4 was put in later than this? A. Yes.

XQ185. When was it put in? A. 1913.

XQ186. Was the extent of the possible adjustment there the same as in one and two? A. Yes.

XQ187. Two inches below to six inches above? A. Yes.

XQ188. What was the extent of the possible adjustment in the No. 3 machine? A. It was about the same; we kept them all the same, as far as that was concerned.

XQ189. There was no adjustment on that machine at the Niagara mill? A. No, none.

XQ190. When you put the blocks under the breast-roll end of that machine, did it leave the suction-boxes stationary? A. Yes, the boxes on that machine are of independent adjustment.

XQ191. And the blocking was the same on both those machines, you say? A. They were the same on both machines.

XQ192. Now you made on those machines what grades of paper? A. Manila, hanging and news.

XQ193. Which did you run principally? A. For the first six or seven years of operation, I think they ran about thirty-three and one-third per cent of each quality; the balance, I think was run pretty near fifty fifty, that is fifty hanging, fifty news, that is up to January 1st, 1915.

XQ194. Since then, what have they been making? A. I don't know, because I haven't been active in the mill since then.

XQ195. Now, what was the speed ot which they made manila on those machines? A. According to the weight; if they were running 30-lb. manila, we would run up as high as 450, 460, 475; but on the 40-lb. manila, slowed down probably to 350, 360, along there. That depended a good deal on the finish, what finish you had to have on that.

XQ196. You are talking about the year 1902, while you were there? A. Oh, 1902—yes, 1902, that's where the thirty-three and one-third per cent came in.

XQ197. When you are talking about those speeds—did you get up to 450 feet on manila in 1902? A. Oh, yes, on the light weight manila.

XQ198. That is the year you were there; you are not confusing that with what they have done since? A. That is in regard to speed?

XQ199. Yes. A. No. The machines were built for high speed machines, but of course, as I say, the weight of the paper makes the speed, as a general thing, and there is no hard and fast lines as to running paper machinery.

XQ200. Unless you have something you want to bring us, confine yourself to my question. A. Ask the question again.

XQ201. And how low speeds did you get on the manila? A. Oh, we got down as low as 200; sometimes a little below that.

XQ202. What speeds did you get when you were running

news in 1902? A. We got 450-60; sometimes under good conditions, 475.

XQ203. How low did you get on news? A. Oh, on news, unless it was some special quality—there was one paper, they called for extra fine finish,—we used to run down as low as 325, 350.

XQ204. Now, on the wall paper or hanging, what would be the maximum and minimum speeds? A. Nothing over 300, and seldom below 275.

XQ205. Did you ever make any change in the pitch according to the speed you were running? A. Not that I know of.

XQ206. Weren't those machines built for 300 feet a minute? A. Oh, no.

XQ207. Are you sure about that? A. These machines have 28 48-inch dryers in them.

XQ208. Had they those dryers in 1902? A. Sure, they had. There has never been any taken out that I know of.

XQ209. Could you show me the specification of that machine? A. I presume the Kimberly-Clark Company has it. I always gave up the specifications after the machines were delivered.

XQ210. Do you know what speed they are running news on that machine now? A. No, I do not.

XQ211. What head do they carry in the flow-boxes in those machines, do you know? The head behind the slice? A. Oh, it was about six inches, I believe, about six-inch head; I believe I measured it one time, when we had eight inches.

XQ212. Referring to the Kimberly mill, was the adjustment that you used there, the form of adjustment that is disclosed in this Moore & White patent that you just referred to, No. 809,832? A. They were the ones that built that part of the machine, I understand. I didn't know that until after the machine was delivered to the mill. I think the Beloit people—I thought they were going to make it themselves.

XQ213. Will you look at that patent and say if that is the form which that adjustment has? A. No, that doesn't show it; that doesn't show the adjustment; it simply shows the spring there for the movement of the rail.

XQ214. Does this patent show you that adjustment? I hand you Moore & White patent 684,081. A. Yes, this shows the adjustment here, except this shows the end shaft for making the adjustment has a handle on it, but ours was made with a square end to put a wrench on; that is the only difference I see there.

XQ215. Now, you understand—do you understand that the

purpose of the adjustment that you had put in on these machines at the Kimberly mill was the same purpose as the blocking that had been put in use at the Niagara mill? A. Yes, it was to make the same condition.

XQ216. That is, it was easier to handle the adjustment than to put blocking under it? A. Yes, sir.

XQ217. Now, what was the reason for specifying that it should be possible to adjust the breast-roll two inches below the level? A. Because we did used to run machines two inches below the level.

XQ218. What is the reason for running below the level? A. Making very heavy weight papers, heavy stock.

XQ219. Giving the stock more time to drain? A. It drains better, and you can get better formed sheets running slow on slow stock, by having the machine level or somewhat below.

XQ220. That is the idea, you want to have it reach the dandy roll a certain consistency? A. Yes.

XQ221. And this slow stock, you may want to run it up hill to give the stock more time to drain on the wire? A. Yes.

XQ222. Whereas, if it is quick stock, you can run it a little down hill, to give it less time to drain on the wire? A. Yes, and get more volume of water to run farther. The stocks that drain easy on the wire, generally means bad formation.

XQ223. Did you have a particularly free stock at the Niagara mills? A. Yes, all newspaper stock is free.

XQ224. That was very free stock? A. Yes.

XQ225. How did you place the precise date when the Kimberly machines started up? A. I can't place the precise date. I don't think I intimated the date. I said the month of May, but I didn't say the date.

XQ226. I don't know that you gave any exact date, but how did you know it was May? A. Because the machines were completed in 1904, and erected in the winter of 1904-1905, and started in May.

XQ227. Well, probably you have something in your mind that leads you to say it was May. Can you tell us what that is? A. Only I know. The machines, I say, was ordered 1904; were delivered 1904-05, and put up in the mill in the winter of 1904-1905, and started in May. The specifications say when they were ordered, and when they were to be delivered. That would refresh my mind somewhat.

XQ228. Probably there are mill records that show exactly when they were started? A. Yes, sure, I presume they have a record back as far as that.

XQ229. You say that those machines had two inches more

pitch given them in 1910 at the Kimberly mill? A. Yes.

XQ230. How do you happen to know it was 1910? A. Because the pitch was added when the third machine was put in; we made the change at that time; it was in 1910.

XQ231. And the third machine had six inches? A. The third has between five and six inches. I wouldn't say exactly to the fraction of an inch, but it has between five and six inches, somewhere.

XQ232. What kinds of paper are being made in the other mills of the Kimberly, other than the Kimberly mill, at the present time? A. I can't tell you, because there has been a great evolution in making paper in the last year and a half, and there has been great changes. They have been making various kinds of paper. I don't know just what they are making in all of them today.

XQ233. Well, are they making newspaper in any of them, do you know that? A. My impression, if they are making any, it is a pretty small quantity, unless you call this light weight catalog—of course that is made from news material; but it is quite a different proposition to make light weight catalog from news.

XQ234. Was that pitch at the Niagara mill in 1902 the first pitch that you had ever seen in a paper mill? A. As much as that.

XQ235. The general practice was to run them either level or up hill? A. I never had anything to do with a machine that was pitched more than an inch and a half or two inches before that.

XQ236. The general practice was to run the machines with the wires flat? A. Yes, or below, if the paper required it.

XQ237. Did you try to raise that pitch higher than four inches at Niagara? A. I never did, no.

XQ238. Did you ever know of anybody trying to? A. Well, I only know from hearsay, not from knowledge, but they raised it to eight inches. But if I was in control of the mills at that time, it was unknown to me. I don't know whether it was done or not.

XQ239. Then it was dropped back? A. Then it was dropped back; that is what they said.

XQ240. As being a failure? A. I suppose on account of the requirements probably of the paper they were making.

XQ241. Do you regard this adjustment such as some of these machines had of the breast-roll as a practical thing? I mean is it practical to change it each time? A. Oh, yes.

XQ242. Doesn't that mean changing also the flow-box when

they make a change of the breast-roll? A. Yes, it does, if you change it very much.

XQ243. Doesn't it mean changing the shake also? A. Not necessarily.

XQ244. And doesn't the thing get rusty? A. Yes, it does.

XQ245. As a matter of fact, where such adjustments have been built in machines, they have been practically disused, so far as changing the pitch is concerned; they have been set at one place and left there? A. We haven't changed the pitch on these machines, because they have been running the same thing all the time.

XQ246. You tell me you were making news at 450 feet, with a four-inch pitch. Now you are making book paper at 300 feet, with a six-inch pitch? A. Yes.

XQ247. How do you reconcile those two things; are they consistent? A. Yes, they are perfectly consistent.

XQ248. What is the explanation? A. The difference between running—what was your first question? Well, there is no difference practically, as I told you in some other question, there was no virtue in making book paper with the pitch of the wire, until you get over 300 feet; that is the explanation. We are running over 300 feet now.

XQ249. Book paper? A. Yes.

XQ250. How much speed are you running? A. 350 to 375, making book papers now.

XQ251. What is the slowest speed you are running now on any paper? A. Oh, writing papers, we are running down as low as 18 feet a minute.

XQ252. Of course you don't make that in the Kimberly mill? A. No.

XQ253. Nor the Niagara mill? A. No, that is a bristol-board.

XQ254. What is the slowest speed you run in the Niagara mill or the Kimberly mill? A. Oh, the Kimberly mill, in the beginning of 1915, up to that time, we used to run down as low as 60 or 70 feet, sometimes. The Niagara mill, at the beginning of 1915—I don't think they were running anything else than wall, which was generally run, as I have stated, 275 feet up to 300. There would be a variation there of about 25 feet with the wall paper, 14-oz. wall paper, 12-oz. and 10-oz. You can't make 14 quite as speedy as 10-oz.

XQ255. Why should you run wall paper on the 6-inch pitch at 275? A. To save the trouble of changing.

XQ256. It didn't make much difference? A. It doesn't make difference enough with wall paper, because nobody looks

through wall paper for fine formation.

XQ257. Well, what is the highest speed at which you were running at the Kimberly? A. Up to the beginning of 1915, we attained a speed of 325 feet there.

XQ258. What is the head you carried there? The head back of the slice? A. That head will run anywhere from 4 to 6 inches.

XQ259. Well, now, why, when you were only running up to that speed, did you use a higher pitch than when you were making news at 450 in 1902 at Niagara? A. Just state that question, say it again.

XQ260. (Read.) A. When we was running 1902 at Niagara why did we use higher pitch?

XQ261. Why did you use higher pitch at 325 or less at Kimberly, than you did when you were running news at Niagara in 1902 at 450? A. Because, with the high speed, it helped the formation.

XQ262. You mean the higher the speed, the less pitch you needed? A. No, you put the question to me, why do you use higher pitch.

XQ263. You use higher pitch now and less speed? A. But of course there is no comparison between book paper and news paper. That is not a practical question to ask, if you are going to go into the details of making paper.

XQ264. Can't you explain why it was that you used a less pitch then than you use now? A. Well, because we hadn't got to the point where we thought it paid to run higher pitch; but as we went along, we found it was beneficial for our formation, and we kept putting on some more.

XQ265. When did you come to the conclusion that it paid to run on a higher pitch? A. When we concluded to run high speeds.

XQ266. When was that? A. Well, that has been gone into carefully and slowly, you might say we have increased in speed —for instance, at the Kimberly mill, we have increased in speed 50 feet or 60 in the last year and a half.

XQ267. It has been a comparatively recent decision that it paid to use a high pitch? A. Yes, as we increased the speed we could afford to increase the pitch to a certain limit.

XQ268. The question that you considered, as to whether you should run with the wire below the level or above the level, and if above the level, how high above the level, was the character of the stock as to quickness or slowness, was it? A. Yes, that is what determined the point.

XQ269. Do you know, Mr. Thom, whether it has been always

a struggle with paper makers to get the most paper they can out of their machines; I mean speed has been the great point with paper makers? A. Yes, certainly, they are always in for the most product they can get.

XQ270. Is there any one that would know more about these operations you have testified to, than you; would your general manager? A. Well, about the conditions of the Kimberly-Clark mills, up to January 1st, 1915, I don't know of anybody that knows any more than I do about that. Of course that doesn't mean I know about general conditions of all mills.

XQ271. Did you ever actually measure the pitch on the machines at Kimberly? A. Not to get it down to the fraction of an inch.

XQ272. Did you ever measure it at all? A. Yes; but never measured it to get it down to the fraction of an inch.

XQ273. How long ago did you measure it? A. I measured them the day they were changed.

XQ274. When was that? A. 1910.

XQ275. What was it took place in 1910? A. Well, they were changed from about four, possibly three and three-quarters or four, up to six, or somewhere in that neighborhood It would be a fraction probably between five and six inches. But I didn't measure it right down fine to get the fractional part.

XQ276. What did you measure? A. I measured the elevation.

XQ277. How did you measure it? A. With a ruler.

XQ278. How did you go to work to measure the elevation? Did you measure that screw bolt? A. You can measure from the wire line to the box back to the breast-roll.

XQ279. Yes, but I mean to say by taking the height of the various places from the floor? A. Yes.

XQ280. But did you ever measure that screw to find out how much possible adjustment there was? A. I never measured the screw.

XQ281. You never measured the extent of the screw? A. I never did, no, sir.

XQ282. Do you remember distinctly that the position of the suction-box was changed when that first elevation was given to the wire, or only when the second—was it when the second additional elevation was given to the wire? A. The suction-boxes are just the same as they were in the beginning. They are an independent adjustment, and they could be adjusted to a pitch of 10 or 12 inches, without any changes in the boxes, except the angle they would be put to with the line of the wire.

XQ283. And the addition of some tapering wood blocks or

shims? A. Yes.

XQ284. Now, what I asked you is, whether it is your distinct recollection that such tapering blocks of wood were used in connection with the suction-boxes to raise them when this first elevation was given at Kimberly, or only when the second elevation was given, up to six inches? A. It was changed when the machines was put in—we made the taper according to the angle of the boxes with the wire; that is when they were changed in 1910, we had to increase that taper. That is the only change that was made.

XQ285. There was no other change on the machines? A. Not at the time that I know.

XQ286. There have not been any changes in the machines since? A. Not that I know of.

RE-DIRECT EXAMINATION.

By Mr. Paul:

RDQ287. Were you thoroughly familiar with the conditions at the Niagara mill at the time you were there in 1902? A. Yes, sir.

RDQ288. And were you thoroughly familiar with the conditions at the Kimberly mill up to the time you retired, which was 1915? A. I used to be there three or four times a week, and knew the conditions of the mill thoroughly.

RDQ289. Now with the construction such as employed at the Kimberly mill, can what you call the permanent rails be adjusted carrying the suction-boxes with them? Could you lift up the ends of the permanent rails that carry the suction-boxes? A. If its mechanism operates, that can be done.

RDQ290. That can be done? A. If it was so desired.

RDQ291. At what speed did you say the machines in the Kimberly mill, the Nos. 1 and 2, were designed to run? A. They were designed to run, when they were installed, 300 feet.

RDQ292. At what speed are they capable of being run; what speed are they adapted to run? A. Well, that is governed largely, as I have explained heretofore, by the weight of the paper. When you ask what speed a machine can be run, name the weight of the paper, and I can tell you pretty nearly.

RDQ293. I had in mind the actual capacity of the machine or adaptability of the machine, on any paper. A. Well, that is of such great variety, Mr. Paul, it is impossible to answer that unless you name the basis. In order to determine what any paper machine will run, you must know the size of the sheet, weight, etc., and then a man can tell you how much paper can be run on a paper machine, if he knows what the length of the wire is, the number of presses, design, amount, number, the

number of dryers,—then he can tell you what that machine will run; quality, results, are a great consideration. You take a machine making bristol board—that is very heavy, but it is a very fine grade of stuff—it has to be made very carefully. You might take that same weight in—well, there isn't any other weight I know of that comes up to that.

RDQ294. Could these machines down at Kimberly be used for running news? A. Up to 500 feet they could.

RDQ295. Why not beyond 500 feet? A. Well, they are not built quite heavy enough; the frame of the machines is not quite heavy enough for beyond 500 feet in speed.

RDQ296. They could as they now stand run news up to 500 feet? A. No, we would have to change all of the cones on the variable speed line or get an engine that would give a higher rate of speed.

RDQ297. But so far as the machines themselves are concerned? A. As far as the machines themselves are concerned, they would do, they would run up to 500 feet on news.

RDQ298. Does the question of the size of the dryers come in determining the speed at which a machine can be run? A. Oh, yes.

RDQ299. In what way does that figure? A. For instance, you take 28, 38 or 42-inch dryers, they wouldn't dry as much paper as 28 48-inch dryers or 52-inch dryers.

RDQ300. So, any machine is limited by the capacity of the dryers? A. Practically so. Of course you have to dry the paper whatever you may be running; you have to have capacity enough to dry it.

RDQ301. Is there any limit at the other end, in the way of furnishing pulp to the machine? A. Yes, there is.

RDQ302. How does that come in? A. Well, on the Fourdrinier part, the first place that gives out in trying to run great quantities—let the paper be thick or thin, or heavy or light, would be the way to express it, rather—the couch-rolls is the weak point. Whenever the web on the wire gets beyond a certain amount of moisture, it will not go over the couch-roll at high speed, and if you want to run a great quantity of any kind of paper, you have to extract the water from the wire under quite heavy vacuum. Unless you do that, you won't get a sheet in a month. So high speed always calls for high vacuum to get the moisture out of the sheet or web that is on the wire. That is the stalling point on any paper.

RDQ303. How is that vacuum obtained; how do you get the high vacuum? A. We have vacuum pumps and these boxes. That is what these suction-boxes are there for.

RDQ304. To extract the moisture? A. They are connected onto the pumps, and the usual vacuum that is established on a paper machine that is running at high speed would be about six inches certainly, in some cases eight inches vacuum. On lower speeds, it will run along four, four and a half, five, six. It varies with the speed of the machine and the thickness of the paper.

By consent of counsel signature waived.

Mr. Paul: Counsel for defendant gave notice of the examination of John E. Alpine, and expected to examine him at this time. Mr. Alpine has today expressed a willingness to attend the trial of this case, and give his testimony in the court. His deposition, therefore, will not be taken.

Adjourned until tomorrow morning, Tuesday, May 29th, 1917.

Tuesday, May 29th, 1917; morning session.

W. H. RYAN,

a witness called on behalf of the defendant, being first duly sworn, deposes and says, in answer to questions by Mr. Paul as follows:

Q1. What is your name? A. W. H. Ryan.

Q2. Where do you live? A. Appleton, Wisconsin.

Q3. What is your age? A. 44.

Q4. What is your present employment? A. Manager, in charge of the traffic department, Kimberly-Clark Company.

Q5. Were you ever employed at the Niagara mill of the Kimberly-Clark Company? A. Yes.

Q6. How long were you there? A. From February, 1898, until April, 1917.

Q7. What was your position at Niagara? A. Until 1914, in charge of the office, real estate, pulp-wood purchases, and other matters; from then on, plant manager.

Q8. Were you familiar with the details of the manufacturing plant and the machines being used in the manufacture of paper? A. From the standpoint of a manager, so to speak, yes; as a practical superintendent, no.

Q9. Were you familiar with the people that were employed there and the dates when they were employed? A. Yes.

Q10. Have you refreshed your recollection as to the dates when certain people were employed there at that plant? A. I have.

Q11. Was Joseph Le Valley ever employed at that plant? A. He was.

Q12. Can you state what time? A. From September, 1901, until 1907—I want to refer to my data on that. (Refers to memorandum.)—Let that stand.

Q13. What was Le Valley's work there? A. He was advanced from third-hand ultimately to machine tender, and he served as machine tender for several years.

Q14. Was he employed there in that mill all the time you speak of? A. Yes, inside.

Q15. Did Mr. Peter Thom ever spend any time there as superintendent? A. Oh, yes, he did.

Q16. When was that that he was there? A. As general superintendent off and on at different times, but his time was put in there—I want to look that up—he was continuously during and a good part of 1902.

Q17. Who was superintendent in 1901 at the Niagara plant? A. A. J. Lewthwaite.

Q18. How long was Lewthwaite there? A. Two years.

Q19. That was what years? A. 1901 and 1902.

CROSS EXAMINATION.

By Mr. Lyman:

XQ20. Do you know what pitch they are carrying on the wires of the Fourdrinier machines at Niagara mill now? A. Not at the present time. The pitch on both machines was changed the past year applicable to one, and the year before applicable to the other of the two paper machines.

XQ21. Well, is it about 20 inches? A. I don't think it is so much as that. I am not positive in my mind, but I couldn't testify to that; it isn't so much as that at the present time.

XQ22. Is it 15 inches? A. I wouldn't say.

XQ23. You haven't any idea? A. Not when you come to use the actual dimensions, no.

XQ24. Well, could you give it within a couple of inches? A. No. If you wish, you can use this as you see fit, we raised the pitch, back in 1915, at which time we were running news, and wall paper, but we changed the pitch very materially, getting out book paper in 1916 on one machine and 1915 on the other. I should say—I want to make one correction—that's right.

XQ25. Do you know what pitch they put in in 1915? A. No, I don't, in inches. I ordered the blocks personally myself, but I don't remember what changes was made, in inches.

XQ26. Have you any memorandum of the date when George Tomske worked there? A. I have not, no.

XQ27. Do you remember when he did? A. My recollection

is, he was there along about 1900-01; but I wouldn't be positive.

XQ28. Does your memorandum show what position Le Valley held in 1902? A. I will look and see; I know myself, know he was there either third-hand or back-tender. No, he wasn't—

XQ29. What was he? A. He was third-hand or back-tender.

XQ30. And when did he become machine tender? A. He was spare-hand part of the time he was back-tender. I would say along about 1903 or 1904. I think he was machine tender for three or four years all told.

XQ31. What is the memorandum you referred to? A. This memorandum?

XQ32. Yes. A. It reads—

Mr. Paul: Is that a copy of the letter you wrote to me?

The Witness: Yes; it is a copy of a letter I wrote to Mr. Paul on the 14th, after I had refreshed my mind in respect to the data I had in mind.

XQ33. Would you have any objection to my glancing at it? A. No, not I. You can see all these papers; they all bear on the same subject.

XQ34. Did Lewthwaite go from your employ to the Remington-Martin Company? A. Not directly, but he did go with them a comparatively short time after leaving Niagara.

XQ35. Can't you give even approximately the pitch used on the wires up there now? A. No, sir, I can't; I wouldn't want to guess at that.

By consent of counsel, signature waived.

Mr. Paul: Counsel for plaintiff and counsel for defendant having today interviewed Mr. Peter R. Thom, who testified as a witness yesterday, it is stipulated that if Mr. Thom were re-called, he would testify that the drawing filed herewith as Defendant's Exhibit N, shows the construction referred to in the parts of Defendant's Exhibits L and M, on page 13 of each thereof, as "Special Specifications."

Counsel for defendant requests that the original subpoena issued by the Wood County Circuit Court, State of Wisconsin, served upon George Tomske, Frank Tomske and John E. Alpine, be attached to the original deposition of George Tomske.

STATE OF WISCONSIN,
ss.
County of Winnebago.

I, Bessie M. Hale, a notary public within and for the state of Wisconsin, do hereby certify that the foregoing depositions of George Tomske, P. R. Thom and W. H. Ryan, were taken on behalf of the defendant pursuant to notice and agreement of counsel for the parties, before me, at the office of Mott & Fenn, National Manufacturers' Bank Building, at Neenah, Wisconsin, on the 28th and 29th days of May, 1917; that the witnesses were by me first duly sworn before the commencement of their testimony; that the testimony was taken in shorthand by Frank H. Ford and afterwards written out by him in typewriting; that the opposing party Eibel Process Company was represented by its counsel, Mr. Harriman F. Lyman, during the taking of said testimony; that the said testimony was taken at Neenah, in the county of Winnebago and state of Wisconsin, and was commenced at ten o'clock a. m. on the 28th day of May, 1917, and was continued pursuant to adjournment on the 28th and 29th days of May, 1917, and was concluded on the 29th day of said month; that the signing of the depositions was waived by consent of counsel; that I am not connected by blood or marriage with either of said parties, nor interested directly or indirectly in the matter in controversy.

In testimony whereof, I have hereunto set my hand and affixed my seal of office at Neenah, in said county and state, this 21 day of August, 1917.

BESSIE M. HALE,
(Seal) Notary Public,
Winnebago County, Wisconsin.

My commission expires April 24, 1921.

DISTRICT COURT OF THE UNITED STATES,
DISTRICT OF MAINE.

EIBEL PROCESS COMPANY,
Plaintiff,
vs.
MINNESOTA & ONTARIO POWER COMPANY,
Defendant.
} In Equity No. 769.

Depositions taken on behalf of the defendant in the above entitled cause, before Robert Dobberman, notary public, commencing on Thursday, May 31st 1917, at ten o'clock a. m., at the office of Rector, Hibben, Davis & Macauley, 1956 McCormick Building, Chicago, Illinois, said depositions being taken by consent of the parties, and without notice, notice being waived.

Appearances: On behalf of plaintiff, Mr. Harrison F. Lyman. On behalf of defendant, Mr. A. C. Paul.

And thereupon the following proceedings were had:

NOBEL J. ROSS,

a witness called on behalf of the defendant, being first duly sworn, deposes and says, in answer to questions by Mr. Paul as follows:

Q1. What is your name? A. Nobel J. Ross.

Q2. Where do you reside, Mr. Ross? A. Beloit, Wisconsin.

Q3. What is your age? A. 63.

Q4. In what business are you engaged? A. Manufacturing of paper mill machinery.

Q5. What is the name of the company with which you are connected? A. The Beloit Iron Works.

Q6. Are you an officer of that company? A. I am.

Q7. What office do you hold? A. Treasurer.

Q8. Are you actively engaged in the business of that company? A. Yes, sir.

Q9. How long have you been connected with this company? A. Since its formation in 1885. I went to learn my trade in the same line of business with the company that preceded this, in 1873.

Q10. Have you been connected with this company and the one that preceded since 1873 continuously? A. I have.

Q11. What part of the business at the present time comes under your direct charge? A. More the finances and estimating, with some supervision of the special construction in the shops.

Q12. When you first went with the predecessor of this company in 1873, what did you do? A. I learned my trade, and then worked in the erecting shops, and traveled on the road, setting up machinery about seven years, erecting machinery on the road.

Q13. That brought it up to what time? A. At the time of the failure in 1881. I traveled for the receiver in 1882-83, and part of 1884. That took in the seven years. 1885 the Beloit Iron Works organized, made up of employees of the former Merrill & Huston Iron Works.

Q14. What position did you have with the Beloit Iron Works when it was first organized? A. I was superintendent.

Q15. How long did you remain superintendent? A. Well, it was about 1904 or 1905 that I was elected secretary and treasurer of this company; I was superintendent at that time.

Q16. About how many years were you superintendent? A. 19 or 20 years I was superintendent.

Q17. While you were superintendent, were you familiar with the various kinds of paper machinery manufactured by your company? A. Yes, sir.

Q18. Have you been familiar with such machinery manufactured by your company since you ceased to be superintendent? A. Yes, until the last two years. I have not had so much to do with the details the last two years—before that, I was acquainted with most of the details.

Q19. What are some of the kinds of paper machinery that you manufacture, in a general way? A. The different kinds of machinery necessary for making tissue paper, book paper, wrapping, print, box-board, roofing felts,—such papers.

Q20. And has the company manufactured machinery for these lines of paper all the time? A. Yes, sir.

Q21. Are you familiar with the machine known as the Fourdrinier paper machine? A. Yes, sir.

Q22. Does your company manufacture any machines of that kind? A. Yes, sir.

Q23. How long has it done so? A. Why, I think the Beloit Iron Works made our first one in 1886, and we have been making them whenever we would get a contract ever since.

Q24. Those are rather expensive machines? A. Yes, sir.

Q25. What is about the average price of an average size machine? A. It is hard to say the average, it will vary from

eighteen to twenty thousand to one hundred twenty-five to one hundred thirty thousand dollars, according to the style and size.

Q26. And that price includes what parts of the machinery? A. It takes in the paper machine itself, with the stuff pumps and screens, the Fourdrinier end, press section, dryers, calendars, reel, winder, driving train, base plates on the Fourdrinier part. On the cylinder machines, the description would be a little different.

Q27. Are you acquainted with Mr. Peter R. Thom, at Appleton? A. Yes, sir.

Q28. How long have you known Mr. Thom? A. Since about 1888.

Q29. With what company is that gentleman connected? A. The Kimberly-Clark Company, Neenah, Wisconsin.

Q30. Was he active in the business of that company two or three years ago? A. He was.

Q31. Did you have business with that company? A. We have, ever since we have been in business.

Q32. Has any of this business been transacted with Mr. Thom? A. Yes, the mills that he was superintendent of, all the details had to be settled with him, when orders were placed with us for machinery.

Q33. Has that related to all kinds of machinery that you furnished for this mill? A. Yes, sir.

Q34. Do you recall furnishing the Kimberly-Clark Company Fourdrinier paper machines for their mill at Kimberly, Wisconsin?

Mr. Lyman: Objected to as not relating to any matter of defense set up in the answer; and it is stipulated it may be regarded that this objection is taken to all succeeding questions along this line, without further repetition.

A. Yes, sir.

Q35. How many machines of this type have you furnished the Kimberly-Clark Company for the Kimberly mill? A. Three.

Q36. When were the first machines furnished? A. No. 1 and No. 2 were contracted for in April, 1904.

Q37. And when were they delivered? A. No. 1 was delivered in December, 1904, No. 2 in January and February, 1905.

Q38. Did you have anything to do with the specifications for those machine? A. I did.

Q39. What did you have to do with the specifications? A. I went over all of the details with Mr. Thom, and made up the estimate, and took the contract for the two machines.

Q40. Was all of the business in relation to the construction of the machines transacted with Mr. Thom? A. Yes, sir.

Q41. Were those specifications in writing? A. Yes, sir.

Q42. I show you papers marked Defendant's Exhibits L and M, and ask you to examine these and state what they are? A. Exhibit L is the specifications for the No. 1 machine for the Kimberly mill, of the Kimberly-Clark Company.

Q43. Are these specifications signed? A. They are; they are signed Beloit Iron Works, N. J. Ross, Secretary, and accepted by the Kimberly-Clark Company, F. J. Sensenbrenner, Vice-President.

Q44. Now, refer to Exhibit M, and state what that is? A. These are the specifications for the No. 2 machine in the Kimberly mill of the Kimberly-Clark Company.

Q45. Are those signed and initialed by whom? A. They are signed by Beloit Iron Works, N. J. Ross, Secretary, and accepted by the Kimberly-Clark Company, by F. J. Sensenbrenner, Vice-President.

Q46. Is there a contract attached to this Exhibit M? A. There are detailed specifications relating to the general contract.

Q47. Are those signed? A. They are.

Q48. By whom? A. Beloit Iron Works, N. J. Ross, Secretary, and accepted for the Kimberly-Clark Company by F. J. Sensenbrenner, Vice-President.

Q49. What else is there connected with these, if anything, any memorandum of any kind? A. There is an agreement between the Beloit Iron Works and the Kimberly-Clark Company whereby the Beloit Iron Works protect the Kimberly-Clark Company from any infringement of patents that might come up in connection with these machines.

Q50. That is attached to the other papers? A. Yes, sir.

Q51. The second paper, Exhibit M, to which you referred as the detailed specifications, begins with the words "Memorandum of agreement made and entered into this fourth day of June, 1904." Is that what you called the detailed specification in your former answer? A. Yes, these were details furnished by Mr. Thom, for the builder to work by.

Q52. I note that the second paragraph refers to "Detailed specifications attached to and made a part hereto, marked Schedule A." What was Schedule A, if you know? A. This is the original contract, dated April 25, 1904.

Q53. Is that the first paper on Exhibit M? A. Yes, sir.

Q54. And is it marked Schedule A? A. Yes, sir.

Q55. Now it speaks of two specifications, Schedule A? A.

Yes, sir.

Q56. What is the other Schedule A? A. For the other machine.

Q57. And that is the other paper, Exhibit L? A. Yes, sir.

Q58. So these papers, Exhibits L and M make the complete contract for the manufacture and delivery of those machines? A. In a general way; all the details had to be gone over with Mr. Thom.

Q59. And how were those arranged? A. By personal interviews and submitting of drawings by the Beloit Iron Works for him to look over.

Q60. What were the drawings that you submitted? A. Our regular shop, machine drawings we call them, with a few details.

Q61. Have you the drawings here of these two machines, showing what is known as the Fourdrinier part of the machine? A. I have not the drawings.

Q62. Well, have you seen them here? A. I have seen blue prints of the drawings.

Q63. Are these the blue prints that you refer to, that I now hand you? A. Yes, sir.

Q64. Are these blue prints of both machines? A. The blue prints show the side elevation of the Fourdrinier end and press section of the No. 1 and No. 2 machines in the Kimberly mill of the Kimberly-Clark Company.

Q65. And are those blue prints of the machines that are covered by the Exhibits L and M? A. They are.

Mr. Paul: The blue prints identified by the witness, illustrating the No. 1 machine is marked, for identification, Defendant's Exhibit O, and the blue print of No. 2 machine is marked, for identification, Defendant's Exhibit P.

Q66. Did your company erect these machines? A. Yes, sir.

Q67. What did you have to do with the erection personally? A. I made the estimate on the cost and we sent a man from the shop with a number of tools, for the erecting, and he hired his labor, help, at the mill for the handling of the material.

Q68. And what did you have to do with it personally? A. I made two trips, while the machines were being erected, and inspected the progress of the work in the mill.

Q69. Did you see the machines also after they were erected? A. Yes, sir.

Q70. How frequently have you seen those machines since the time of the erection? A. The first two years, I probably saw them once a month. After that, I haven't seen them very often; I haven't seen them now in about four years.

Q71. Do these blue prints illustrate in a substantial degree one of the machines as they were erected? A. Yes, sir.

Q72. Were there any changes from the construction shown in these machines? A. Oh, yes, there were minor changes made at the time we erected them in the mill; and they made a few changes afterwards.

Q73. What do you refer to, minor changes made when the machines were being erected, the character of those changes? A. A few of the felt rolls and wire rolls had to have the position changed, and over the breast-roll, what we call the apron-board, had to be supported from the head-vat, instead of from the breast-roll casting, as shown in the drawing. These were the principal changes. A few years after the machines had run, they changed the speed of the machines by making new pulleys on the variable speed.

Q74. Did you do that? A. We made the pulleys, yes, sir.

Q75. Was there more than one change of that kind made? A. On one machine, we changed the pulleys twice, so as to give them additional speed.

Q76. When was the first speed change made? A. I should say about four years after the machines were built.

Q77. And the second one? A. About three years later.

Q78. Were these machines provided with any means for adjusting the breast-roll end of the Fourdrinier? A. Yes, sir.

Q79. What means were provided for that purpose? A. We had worm-gears and worms with cross shaft and crank, for raising and lowering the breast-roll end down as far as the suction-boxes—the suction-box section.

Q80. As those machines were installed, what was the amount of vertical movement that could be given to the breast-roll end of the machines by the adjusting device? A. About eight inches.

Q81. And when you say "about," how close do you use the term? A. Oh, a quarter or half an inch.

Q82. To what extent could the breast-roll end of these Fourdrinier machines be elevated above the level? A. About six inches.

Q83. And to what extent could they be depressed below the level? A. About two inches.

Q84. And how did you state that this was accomplished? A. By means of worm-gears and screws or worms on a cross shaft and crank, with hand-wheel on the end of the cross-shaft.

Q85. Had you built other Fourdrinier machines of this same type prior to these machines for the Kimberly-Clark Company? A. We had built them with the adjustable end.

Q86. How had those other machines been adjusted at the breast-roll end? A. By practically the same methods.

Q87. To what extent had the other prior machines been capable of elevation above the horizontal? A. Only about five inches above the level.

Q88. Did you make these two Kimberly-Clark machines so that they were capable of six inch elevation? Why did you so make them? A. Mr. Thom required that in his special specifications and the verbal talks that we had. The arrangement was made to suit Mr. Thom.

Q89. And do you find any such provision in the special specifications to which you have referred? A. There is a general clause that says that all details of the machines shall be satisfactory to Mr. Thom. I don't know which set of specifications that is, but that is part of the contract, and the acceptance of the machines depended upon Mr. Thom's approval.

Q90. But my question is, was there anything in these specifications specifying the length of the screws or the amount that the breast-roll end of the machine shall be capable of elevation above the level? A. Not that I know of.

Q91. Do you personally recall that such an arrangement was made with Mr. Thom? A. Yes, sir.

Q92. Was that made with you? A. Yes, sir.

Q93. And were the machines as furnished and installed at that time, capable of this amount of adjustment? A. To the best of my knowledge, yes, sir.

Q94. Do you recall at what elevation your machines were run at the time they were first installed? A. No, I don't.

Q95. How much work was it to change from one elevation or pitch to another; could it be done readily? A. Yes, sir. The extreme travel of the adjustment above the level would take about an hour to make the change, because of the head-vat not going with the Fourdrinier end.

Q96. What would you have to change there? A. The apron and flow-board in the head-vat would have to be changed, if the entire variation was made at any one time.

Q97. What was the elevation of the flow-board or apron-board with reference to the top of the breast-roll? A. It was originally set up for the breast-roll to be level with the top of the guide-roll.

Q98. And where did that bring the apron-board? A. It just cleared the breast-roll, so as not to drag on the wire.

Q99. And when you say "It was originally set up," what do you mean by that? A. When our erecting man erected the machines in the mill, that was the starting point.

Q100. Now, do you know whether they were operated that way in that machine? A. No, sir, I don't; I wasn't there when the machine started.

Q101. But that was the position these parts were during this erection? A. Yes, sir.

Q102. Did you construct all of this mechanism of the Fourdrinier part of the machine in your own shop? A. No, sir.

Q103. Where did you get any part of it? A. The Moore & White Company, of Philadelphia, Pennsylvania, furnished the main frames and posts and the shake mechanism.

Q104. And the other parts of the machine were made by you? A. Yes, sir.

Q105. Did you have any drawing, blue print, more in detail than the blue prints Exhibit O and P, of the portions of the machines furnished by Moore & White? A. We had their detailed drawings, so as to make our general drawing, to have our parts fit their parts.

Q106. Have you those detailed drawings? A. I think they are on file in our office.

Q107. Have you any of them here? A. No, sir.

Q108. Were those special drawings furnished for each machine you purchased from Moore & White or the parts of each machine you purchased from Moore & White? A. They were either special drawings or dimensions to put in specially for our work. We sometimes have a general drawing, with dimensions left blank, and then fill in dimensions according to the machine that is going out.

Q109. Were those drawings from Moore & White ever furnished to the Kimberly-Clark Company? A. I don't know.

Q110. Would they be, according to the usual business methods? A. No. Kimberly-Clark Company had no contract or dealings with Moore & White Company on this job.

Q111. What is your best recollection, if you know, as to whether those drawings were furnished to the Kimberly-Clark Company? I mean the Moore & White drawings of the Fourdrinier end? A. I don't remember any Moore & White drawings going to the Kimberly-Clark Company.

Q112. Did the Moore & White Company furnish the entire adjusting portion of this Fourdrinier end? A. I am not sure about that, whether they made the adjusting attachment or whether we did.

Q113. What part do you include now by the term "adjusting attachment"? A. The screws, worm-gears, cross shaft, crank, and boxes to hold them.

Q114. Did you sometimes make those parts yourself? A.

Yes, sir.

Q115. You are not positive with reference to these two particular machines? A. I am not.

Q116. Can you state the lengths of the adjusting screws that were furnished with those machines to get the adjustment which you have named? A. No, sir.

Q117. About what length would be required to get an adjustment of eight inches? A. I wouldn't make any guess on that.

Q118. But those parts include something more than the adjusting portion? A. Oh, yes, you have to have your bearings, worm-gear feed, in addition to the travel part; it all depends on the details of construction of the supporting parts how long the screw must be as a whole.

Q119. I call your attention to Moore & White patent, which has been marked Defendant's Exhibit K, and direct your attention to the adjusting device shown in the drawings of that patent, and ask you to state whether those drawings illustrate substantially in a correct manner the adjusting device on these Kimberly-Clark machines you furnished at the time you stated? A. In a general way; that shows it more in detail.

Q120. You refer now to figures 1 and 2? A. Yes, sir, that shows it more in detail.

Q121. And do these drawings taken altogether substantially show that construction on those machines? A. Yes, sir.

Q122. I call your attention to sketch marked Exhibit N, and ask if you recognize that? If you do, state what it is. A. That is a drawing furnished the Beloit Iron Works by Mr. Thom, of the Kimberly-Clark Company, showing the dryers as he wanted them made, toward the calender end of the two machines we made him, No. 1 and No. 2.

Q123. Were you furnished a drawing of this kind, a blue print, something showing this construction? A. He sent us a drawing of that arrangement, and we incorporated that in our main drawing, and sent it to him for his approval.

Q124. This went in then as a plan of the construction? A. Yes, sir.

Q125. Does it show on the drawings here? A. No, we don't show any more than one or two dryers on these blue prints.

Q126. What drawings do you say this was incorporated in? A. On the main machine drawings, a part of the prints of which are here, of the wet end of those machines.

Q127. This had nothing to do with what you call the wet end of the machines? A. No, sir, this was at the calender end, the dry end of the machine; and it was one of the details that

had to be arranged to suit Mr. Thom.

Q128. What was the arrangement of the rails at the Fourdrinier end of the machine, permitting the breast-roll to be adjusted? A. Why, the main top rails were in two lengths on each side of the machine; the longer section extended from the breast-roll to the suction-boxes. That is, the longer section was adjustable; the shorter section, extending from the suction-boxes, was not adjustable with this hand power arrangement.

Q129. How long were the adjustable portions of the frame? A. 218 inches.

Q130. What was the length of the fixed part of the rail? A. About 95 inches.

Q131. What was the means for holding the breast-roll end of the rails, so as to permit them to be elevated? A. They were held to the end posts by heavy brass bolts, and a hinged joint provided at the suction-box end.

Q132. Now, what was the result of raising the breast-roll by the hand-power adjusting device that you have described; what effect did that have on the parts of the machine? A. Why, it made the—what we call a break in the pitch at this point; this short section of rail from the suction-box was level, and the other part, the long section of the rail, from the suction-box, was on a pitch.

Q133. As those machines were constructed and installed, what elevation could be given to the breast-roll end? A. About six inches.

Q134. And what would be the position of the wire when the breast-roll was thus elevated? A. It will have a pitch down to the suction-boxes, and then run level from the suction-boxes to the top of the guide-roll.

Q135. With such a position of the wire, is it practicable to use the machine? A. Not always in starting up.

Q136. Why not? A. The wire had a tendency to break suction on the first box, until the paper was onto the box well primed with water, so the suction would hold the wire down tight to the top of the box.

Q137. Was there any way of remedying this or overcoming that objection to using the machine? A. Many mills blocked up the post here (indicating on print) and so raised the suction-box section at the end next the long rail, leaving the end next to the couch-roll practically stationary.

Q138. You say many mills did that? A. Yes, sir.

Q139. Do you make that statement of your personal knowledge? A. I have seen it in the mill in operation. We didn't do it.

Q140. How early had you seen that?

Mr. Lyman: That question is objected to as not relating to any defense set up in the answer, and it is stipulated that the same objection may be regarded as taken to all subsequent questions along this line.

A. I wouldn't state definitely.

Q141. Had you seen it anywhere prior to the delivery of these machines to the Kimberly-Clark Company? A. I wouldn't be sure that I have, no.

Q142. Any change in the construction of the machines required to block up this post? A. No, sir.

Q143. How were the suction-boxes of these machines held in position? A. There were four steel bolts through the end suction-box, up through the top steel rail, with brass nuts on top.

Q144. Could those suction-boxes be adjusted in any way? A. Yes.

Q145. How could that be done? A. The bolts could be slacked off, and shimming pieces put between the rail and the top of the box.

Q146. What would be the effect of that? A. It would help to make the box to fit the pitch of the wire.

Q147. That would tilt the upper surface of the box? A. Yes, sir.

Q148. Were those independently adjustable? A. Yes, sir.

Q149. Could these boxes be simultaneously adjusted by raising the forward end of the rails to which they are screwed? A. Yes, sir.

Q150. How are those rails held in position? A. By large brass bolts.

Q151. Do those bolts show in the drawings, O and P? A. Not on the short rails.

Q152. Do they show on the long rails? A. Yes.

Q153. What were the bolts that held these suction-box rails in position? A. What kind of bolts were those?

Q154. Yes. A. These were brass that held the steel rail to the cast iron post.

Q155. One at each end of the rail? A. Yes, sir.

Q156. Now, to what extent could the breast-roll end of the Fourdrinier part of each of these machines be elevated, as the machines were originally started? A. About six inches.

Q157. What would be necessary to do to elevate the posts supporting the rear ends of the movable sections of the rails and the forward ends of the stationary section? A. Simply unbolt the posts from the cast iron base plate, and insert wooden or iron lifts and longer bolts through into the base plates.

Q158. Would this require any change in any part of the construction of the machine? A. Nothing that could not be changed by any ordinary millwright.

Q159. What change would be required? A. The hose connection to the suction-boxes from the pipe going to the suction pump would have to be adjusted; that is about all.

Q160. As far as the machine itself is concerned, would any change be required? A. No, sir.

Q161. Assuming that machine to have its breast-roll elevated four inches, what arrangement could be made to accommodate the suction-boxes to the amount of slant given the wire under those circumstances? A. I don't think any adjustment would be necessary.

Q162. With a four-inch adjustment of the breast-roll— A. Yes.

Q163. —You think no adjustment of the suction-boxes would be required? A. No, sir.

Q164. If any adjustment were desired, how could that be obtained? A. The bolts holding the boxes to the wires, could be slacked off and shimming pieces put between the top of the box and the bottom of the rail.

Q165. Would that overcome the objection that you spoke of, of having the wire not held to the box at the beginning of the operation? A. That would be the tendency, yes, sir.

Q166. Have you ever built any machine or machines in which the entire rail on each side was in a single piece or section? A. Yes, sir.

Q167. What machine did you build that had that construction? A. The only one we built with the adjustable end that way was in the Northern Paper mills at Green Bay, Wisconsin.

Mr. Lyman: Any questions relating to the Northern Paper mills mentioned, is objected to as not relating to any matter set up in the answer; and it is stipulated that this objection may be regarded as taken to all questions along this line, without further repetition.

Q168. When was that machine built? A. Our contract was taken in March, 1904.

Q169. How soon thereafter were the machines delivered, about? A. Some time in the fall; I don't remember just the date.

Q170. The fall of that year? A. Of 1904, yes, sir.

Q171. What was the effect of having a continuous rail in that machine? A. The suction-boxes had the side swing motion of the top rails and also had the continuous pitch from the breast-roll to the top of the guide-roll. It gave the wire a con-

tinuous pitch from the top of the breast-roll to the top of the guide-roll.

Q172. In that case, if the breast-roll was elevated, the rails were tilted from a point back of the guide-roll? A. Yes, sir.

Q173. And what amount of elevation was given to the machine you last speak of? A. The Green Bay machine had an elevation of about five inches.

Q174. Was that both above and below the level? A. No, it had about an inch below the level.

Q175. How much above? A. About five inches.

Q176. Then the total amount was about six inches? A. The total amount was about six inches.

Q177. Referring back to the Kimberly-Clark machines—I don't know but I asked you—I will ask you whether they had any movement below the level? A. About two inches below the level.

Q178. The entire travel, then, was about how much? A. About eight inches.

Q179. Did you, before arriving at the building of the Kimberly-Clark machines Nos. 1 and 2, build any other machines having adjustable breast-rolls, other than the Green Bay machine, to which you referred? A. Yes, sir.

Q180. What other machines did you build and when? A. A No. 1 machine for the King Paper Company, at Kalamazoo, Michigan, contracted for in November, 1901, their No. 2 machine, for the same company, contracted for in November, 1902; and the Riverside Paper Company, at Appleton, Wisconsin, their machine was contracted for in February, 1902; the Rhinelander Paper Company No. 1 and No. 2 machines; the final contract was signed in June, 1903. Then we had one or two others, that I haven't the dates of; one in Canada. I haven't the date on that.

Q181. What do you refer to in giving these dates? A. The date of the contract.

Q182. Have you refreshed your recollection by examining those contracts? A. I have.

Q183. Have you any of those contracts here? A. No, sir.

Q184. How recently have you refreshed your recollection by referring to the contracts? A. Within the last week.

Q185. What was the length of the wire of the machine furnished the King Paper Co., if you recall? A. About 60 feet.

Mr. Lyman: Any questions relating to the King Paper Company are objected to as not based on anything in the answer.

Q186. What was the length of the wire of the Green Bay machine? A. Between 30 and 40 feet, well—

Q187. What was the length of the wires of the Riverside machines? A. About 60 feet.

Q188. And of the Rhinelander machines? A. About 60 feet.

Q189. And Kimberly-Clark Company? A. About 65 feet.

Q190. Now, you say "about" in each case; how close does that come to it? A. Well, on the wires it might vary an inch or two. As a matter of fact, the Kimberly-Clark machines measure 65 feet and one inch, as I remember it.

Q191. Comparing the machines, the Green Bay machine, the length of wire that it had, with the Kimberly-Clark machines, what difference in pitch would there be by the same elevation of the breast-roll? A. The Green Bay machine wire would have about the same pitch from the breast-roll to the suction-boxes—from the breast-roll to the guide-roll—as the Kimberly machine No. 1 and No. 2 would have from the breast-roll to the suction-box section.

Q192. With how much elevation at the breast-roll? A. With the same elevation on either machine.

Q193. Which machine would have the steeper pitch? A. They would have about the same pitch as far as they were pitched, because the Kimberly machines didn't have the continuous rail over the suction-boxes, and having a longer wire, made the pitch of the Kimberly machines' long rail practically the same as on the short wire of the continuous rail of the Northern or Green Bay machines.

Q194. Now, assuming that the Kimberly machines, the suction-boxes supporting posts were raised so as to give the wire a continuous pitch from the breast-roll to the guide-roll, which would then have the greater pitch, with the same amount of elevation of the breast-roll? A. The Green Bay machine.

Q195. Could you say about how much steeper that would be? A. No, I couldn't. The breast-roll would be elevated the same on both machines, but one machine with the shorter wire, would have the steeper pitch. It shows about one inch difference at the suction-boxes—the suction-box post, between the two pitches. You see that point would be stationary on one, and this point stationary on the other (indicating on print). And this is about the length of the Green Bay machine—they had all that pitch in this length, while this would have to come down to here (indicating on print).

Q196. About how much would it be necessary with the Kimberly-Clark machines, having the breast-roll elevated six inches, to raise the posts at the suction-boxes to have this continuous pitch? A. About one inch. Of course it isn't exactly accur-

ate, because my rule isn't dead straight (measured on print).

Q197. It might vary a little from that measurement? A. Yes, sir.

Q198. Were all of these machines which you have mentioned as having an adjustable breast-roll device, provided with what you called Moore & White adjustment? A. No, sir.

Q199. Please state which ones had that adjustable device and which did not? A. None had the Moore & White adjustable end except the Kimberly-Clark machines.

Q200. What was the construction of the others? A. It was designed and built by the Beloit Iron Works, and the adjustment was practically the same as the Moore & White.

Q201. Can you point out any particular in which the adjustment device differed? A. No, not a material difference.

Q202. As far as the adjusting of it is concerned, they were substantially the same? A. Yes, sir.

Q203. The Moore & White Co. didn't furnish this? A. No, sir.

Q204. Were the adjusting devices for all these other machines furnished the Kimberly-Clark Company, built by the Beloit Iron Works? A. Yes, sir.

Q205. What was the amount of adjustment above the level with the King machines? A. One machine was about four inches above the level; the other machine was about ten inches.

Q206. When were those machines constructed? A. 1901 and 1902.

Q207. Where were they installed, at what town? A. Kalamazoo.

Q208. Are they still in operation? A. Yes, sir.

Q209. Do you know whether they are still using the same pitch? A. I don't know what pitch they are using.

Q210. Did I understand you to say which machine was capable of being raised four inches? A. My recollection is it was the No. 1 machine, contracted for in 1901.

Q211. I understand that the other machine was capable of being raised ten inches above the level? A. Yes, sir, about ten inches.

Q212. Were either of those machines capable of being adjusted below the level? A. No. 1 had an adjustment about one inch below the level; and No. 2 I don't remember about.

Q213. Did you ever see those machines in operation? A. Yes, sir.

Q214. Do you know at what pitch the machine having the ten-inch adjustment was operated? A. I never saw it with over three inches pitch.

Q215. Now, what was it about that machine that differed from the other King machine, permitting a greater adjustment? A. We had I-beams extending from the post by the guide-roll through and beyond the head-vat, so that we could adjust the entire machine on that pitch.

Q216. Would that adjust the suction-boxes too? A. Yes, sir, they were mounted on this base (indicating), the base being mounted on the I-beams.

Mr. Lyman: The I-beams extended from the breast-roll to where?

The Witness: It extended from the couch-roll or guide-roll to the back of the head-vat.

Q217. What means was provided for adjusting those I-beams? A. We had power adjustment, so that, by means of it, we could raise and lower the entire Fourdrinier end by power, instead of doing it by hand.

Q218. Now, can you give the date when that machine was installed? A. No, sir, I don't remember.

Q219. What was the year? A. The contract was signed in November, 1902.

Q220. About how much later was the machine installed? A. If I recollect, it was about a year before the machine made paper, after the contract.

Q221. Is that mill still in existence? A. Yes, sir.

Q222. Do you know whether the machines are still in operation? A. They were the last I knew.

Q223. How recently have you seen that machine? A. About four years.

Q224. Was it then in the same condition as when it was sold by you? A. Yes, sir.

Q225. At that time what pitch was that machine being operated, when you saw it last? A. About three inches.

Q226. What kind of paper was being made? A. Book paper.

Q227. What is the highest pitch you have knowledge of its being operated? A. That is all that I know; three inches.

Q228. Did you ever see the machine, other than the one time, since it was installed? A. No, sir.

Q229. What was the size of these I-beams? A. They were about 14 inches deep.

Q230. One at each side of the machine, I suppose? A. Yes, sir.

Q231. How were they supported at or near the couch-rolls? A. We had a heavy cast post, extending parallel or perpendicular with the post that holds the couch-roll, and that was

bolted to the top of the I-beam below, and the top rail, over the suction-boxes, was bolted to the top of the post, and a heavy cast ear on the couch-roll post received a heavy cast ear on this post (indicating on print), so that the swivel-motion was at this point, about even with the bottom of the guide-roll.

Q232. What was the means of supporting the I-beams at the other end, near the vat? Beyond the breast-roll? A. We had heavy square threaded screws on ball-bearings, with worm-gear and worm to operate the elevation of the Fourdrinier end.

Q233. And you elevated that by elevating the ends of the I-beams? A. Yes, sir.

Q234. Have you drawings showing that arrangement of the adjustable device of the King machine? A. Not with me.

Q235. Have you drawings at Beloit? A. Yes, sir.

Q236. That shows that arrangement? A. Yes, sir.

Q237. And the written contract under which that machine was constructed? A. Yes, sir.

Q238. Have you ever made any other machines having that kind of adjustment? A. We built one in Canada, but I don't remember the details of it.

Q239. How long ago was that? A. It was before we built the King machine, but I don't remember the date.

Q240. Have you ever seen any Fourdrinier machines in paper mills that had a pitch given to the wire by the blocking up of the standards? A. Yes, sir.

Q241. When and where did you see such an arrangement first, do you recall? A. The first one I saw was in July, 1898, on a Pusey & Jones machine at Fort Edwards, New York; the breast-roll was blocked up five inches or six inches, and the post by the suction-boxes about one inch.

Mr. Lyman: Objected to as not relating to any defense set up in the answer, and it is stipulated that the same objection may be regarded as taken to all such questions along this line, without further repetition.

Q242. How do you fix the date when you saw that machine? A. We had just closed a contract with the Northwestern Paper Company at Cloquet, Minnesota, for a three-press Fourdrinier machine, and the Beloit Iron Works had never built a three-press machine of the Fourdrinier type, so I made a trip east to Fort Edwards where a three-press machine was in operation. Alongside this three-press machine, I noticed this machine in operation with the breast-roll blocked up.

Q243. What was the character of the blocks? A. Just any ordinary blocks that a millwright would cut out.

Q244. Wooden blocks? A. Wooden blocks, yes, sir.

Q245. What was the shape? A. They were necessarily shaped to fit the feet of the stands that were holding the breast-roll end and the suction-box posts.

Q246. Did you at the time see any other blocks that were not in use? A. I saw blocks on the floor and asked the machine boss, who was showing me around, what those were for, and he said they were to lift the breast-roll more, the next day they shut down.

Mr. Lyman: Answer objected to as hearsay.

Q247. Who was the machine boss? A. Mr. Cahoon.

Q248. Do you know his first name? A. I think it was George Cahoon.

Q249. Where is he at the present time? A. He is now a general manager of the Laurentide Paper Company at Grand Mere, Canada.

Q250. What time in July was it you saw that? A. That was the third of July.

Q251. Was there anything about the visit that enables you to fix the date as being the third of July? A. Yes, on my way to the hotel from the mill, I heard two men talking about the different trips on the Fourth, and one said, "where is Jack going?" "He is going to such a place." "Why, he can't get back until the evening; who is going to carry the end over on No. 1?" The other fellow didn't know.

Q252. This incident has remained in your mind all of these years? A. It has.

Q253. Anything else about the trip that impressed the date on your mind, or have you any way of fixing it, other than you have stated? A. Why, only that I saw a man sitting in the mill, in an arm-chair, who never did any work, only when the paper broke on the machine, and he carried the end over. Whether he was Jack or not, I don't know.

Q254. But in this way, you are able to fix the time as being in July, 1898? A. Yes, sir—no, let's see, 1898—yes, sir.

Q255. Have you referred to the contract for the three-press machines,—the date of that contract? A. I have.

Q256. Refreshed your recollection as to that? A. Yes, sir.

Q257. What is the date of that contract? A. I don't remember exactly; it was about May, 1898.

Q258. You don't remember the day? A. No, sir.

Q259. What kind of paper was being made in that mill at Fort Edwards, at the time you saw the blocking under the machine there? A. Print paper, newspaper, as they call it.

Q260. Do you know how fast the machine was running? A. No. 1 about 500 feet.

Q261. Which was the blocked up machine? A. The No. 2 was the blocked up machine.

Q262. How fast was that running? A. 480, about 480.

Q263. The No. 1 was running about 500, and wasn't blocked up? A. No, sir.

Q264. Was the wire level on that? A. Yes, sir, to the best of my knowledge.

Q265. At what speed were the Kimberly-Clark machines designed to run, when they were first installed? A. The original contract was from about 50 to 300 feet.

Q266. But with the change that was made?

Mr. Lyman: Objected to as leading.

Q267. You have stated you put in a change speed device; what else did you make? A. We made new pulleys for their variable speed line shaft; and on the No. 1 machine, we made two sets, the first one to bring the high speed up to about 375, and the second change would make the high speed about 425.

Q268. Does that mean that this machine would have to run at that speed, or could it run at a less speed? A. It could run at less speed, because they had a variable speed engine driving it. That engine had a ratio of six to one.

Q269. Could those machines be run at higher speed? A. Not without changing pulleys.

Q270. What was the change made on the other machine? You have referred to the change on one; what was the change on the other? A. As I remember it, we raised the high speed from 300 to 375. I don't remember raising the speed again on that No. 2.

Q271. Has your company ever been called upon to make any change in the adjustable device of these two Kimberly-Clark machines? A. No, sir.

Q272. Are the table-rolls on this machine—those machines adjustable? A. Yes, sir.

Q273. How are they adjustable? A. Each roll has an adjusting screw for adjusting it to a level; and then the rails that the rolls are in, are adjustable on their brackets.

Q274. What is the purpose of these adjustments of the table-rolls? A. The individual adjustment is to keep the top of the rolls level at all times. If the bearing wears down faster on one roll than the other, they can adjust that roll up to a level with the other rolls. The slots on the brackets allow the whole group of table-rolls to be raised or lowered to suit the requirements of the machine.

Q275. Can you furnish a drawing of that device for adjusting the King machines at Kalamazoo, where the machine was

tilted? A. Yes, sir.

Q276. What have you of that, have you the original drawings? A. We have at the office.

Mr. Paul: Counsel for defendant gives notice that he shall move to amend its answer, and set up as additional defenses the prior structures and uses testified to by several witnesses examined by defendant, beginning on Friday last; and he also prays the court for permission to take additional testimony respecting the King machine, about which the witness has testified this morning, as having an adjustable I-beam supports for such machines.

CROSS EXAMINATION.

By Mr. Lyman:

XQ277. Have you a drawing of the machine that you built for the Northern Paper Company? A. Not with me, no.

XQ278. Have you one at the works? A. Yes, sir.

XQ279. Will you produce that drawing, please? A. I haven't any with me.

XQ280. Well, will you get one? A. Yes, sir.

XQ281. How soon can you get it? A. I can get it here tomorrow morning.

XQ282. Can you have it here tomorrow morning; also a drawing of the King machine and the Moore & White drawing of the adjustment on the Kimberly-Clark machines? A. Yes, sir.

XQ283. Please do so. A. Now, this will be a blue print, because the drawings belong in our files. I will take a blue print of the drawings.

XQ284. Are there any other drawings of the Kimberly machines except these two which you will produce, in your possession? A. We have the complete drawings of the machines, but it doesn't show the elevation part, except as we have our working drawings—detailed working drawings, for getting our parts.

XQ285. Have you detailed working drawings also? A. I think we have.

XQ286. Will you send for those too, please? A. Yes, sir, if we have them.

XQ287. Have you ever seen the machine running with an elevation of four inches at the breast-roll, without the suction-boxes being raised to correspond? A. Never four inches.

XQ288. How much have you seen it? A. Three inches.

XQ289. Is that about the limit of what you can do without raising the suction-boxes? A. That seems to be the working limit.

XQ290. Why is that? A. Because the wire has a tendency to leave the boxes and break the suction, until they get the sheet on. I think I have seen it four inches elevated, but they had trouble in starting up until they had primed their box and got the suction going to hold the water.

XQ291. Now, these Kimberly-Clark machines were constructed in accordance with these drawings you will submit? A. Yes, sir, drawings and specifications.

XQ292. And there was no blocking under the forward end of the suction-box rails, when they were started? A. Not when our erecting man put them up.

XQ293. Now, you spoke about a possibility of adjusting the suction-boxes by putting shims between the top of the boxes and the bottom of the rail from which the box is supported, did you not? A. Yes, sir.

XQ294. Those are tapering shims? A. Yes, sir.

XQ295. Now, the result of putting those shims in would be to depress still further the suction-boxes, would it not? A. Not if they cut off the cover on the inside of the rail. They would raise one edge and not depress the other from the original position.

XQ296. What do you mean, "Cut off the cover inside of the rail"? A. In some of the machines, the perforated cover extends clear through out under the rail; others, it doesn't.

XQ297. Now, what was the effect on these at the Kimberly-Clark—these Kimberly-Clark machines? A. As I remember it, when they were built, the cover went out under the rails, but their millwright could cut them off.

XQ298. Now, how do you mean he could cut them off? A. They are maple, and he could saw them off.

XQ299. So they wouldn't extend beyond the rails? A. Yes, sir.

XQ300. Assuming that they do extend out beyond the rails, then the putting of those shims you speak of between the top of the suction-box and the bottom of the rail, would depress the suction-box from its original position? A. One edge, yes, sir.

XQ301. Well, that wouldn't have any effect, then, in helping matters, if you raised the breast-roll end of the machine, would it? A. No, sir.

XQ302. Assuming that those suction-boxes—the covers, extend out below the top rails in the Kimberly machines, the only manner of arranging that machine so as to make it operative and yet allow of a pitch as much as four inches at the breast-roll, would be to put blocking under the forward end of the suction-box support, would it? A. That would be the best

way.

XQ303. Well, would there be any other way? A. I don't know.

XQ304. Do you remember when you first heard of the high pitch of the Eibel method—that he put on the wire at Rhinelander? A. I don't remember the date; I was up there in the mill, but I don't remember the date.

XQ305. Do you mean you went up there to see it? A. No, I was up there on another trip, on other business, and they showed it to me then.

XQ306. How high was the pitch when you saw it? A. I should say about 14 inches.

XQ307. On which machine was it? A. On No. 1.

XQ308. Had No. 2 then been pitched? A. Only as they had our adjustment.

XQ309. How much possible adjustment was there in your adjustment? That is, how much capacity for raising above the level? A. About five inches.

XQ310. Above the level? A. Yes.

XQ311. How much below the level? A. About one inch.

XQ312. Have you a drawing of the Rhinelander machine? A. We have in the office .

XQ313. Will you please have one of those here tomorrow? A. I will try to, but we are getting more prints than we can take today; you only want the Fourdrinier ends, anyway.

XQ314. That is all. A. The No. 1 and No. 2.

XQ315. Both of them, please? A. They are practically duplicates, only in the length of the wire.

XQ316. No. 1, I guess, if they are substantially the same; No. 1 will be sufficient. A. They are practically the same, except, possibly, difference in the length of the wire.

XQ317. When you saw the Eibel machines, with this pitch, at Rhinelander, what was the speed, do you remember? A. It was a little over 500 feet, but I don't remember now.

XQ318. Did you ever take any one up to Rhinelander to see that machine? A. Yes, sir.

XQ319. Who did you take up there? A. Mr. C. G. Oberley.

XQ320. Where did he come from? A. He was then at the Watab Paper Mill, at Sartell, Minnesota.

XQ321. What did you take him up there for? A. To show him the pitch of the wire and the formation of the sheet, at the speed they were then running of nearly 600 feet.

XQ322. Do you remember when it was you took him up? A. No, I don't.

XQ323. Why did you take him up—I mean why was it de-

sirable to take him up there? A. Well, he doubted my word when I told him the story; he thought it was a fish-story.

XQ324. Did you take any one else up there? A. Not that I remember.

XQ325. How about Mr. Hawley, of the Hawley Pulp & Paper Co.? A. He may have gone there, but I don't think I took him there.

XQ326. You subsequently built a machine for him? A. Yes, sir.

XQ327. About what time did you build that machine for him? A. I don't remember the date.

XQ328. About 1907 or 1908? A. Along in there, but I don't remember the date exactly. It was after Eibel had elevated his end.

XQ329. How much of a pitch did you put on that machine for Hawley? A. His No. 1 machine was capable of being pitched 15 inches, as I remember.

XQ330. And that was put on as a result of Eibel's demonstration, was it? A. It was put on because Mr. Hawley wanted it.

XQ331. He wanted it because Mr. Eibel had made a success of it?

Mr. Paul: That is objected to as asking for matter which it has not yet appeared this witness has any personal knowledge of.

XQ332. Can you answer that to your personal knowledge? A. No, sir, I can't, definitely.

XQ333. What was there about that thing that Mr. Oberley doubted your word and thought you were telling him a fish-story? A. Why, he was a machine-tender and learned his trade in a paper mill, and had never seen a machine that had that amount of pitch, and so doubted my statement.

XQ334. He doubted the statement that that amount of pitch could be carried, or that you could run at that speed? A. He doubted the pitch.

XQ335. Well, was it a striking thing? A. Oh, yes.

XQ336. What about the speed, was that a striking thing also? A. Well, there were other machines being run about 600 feet in the east, but none in the west.

XQ337. Were they making good paper? A. Yes, sir.

XQ338. As good as Eibel was making? A. I don't know.

XQ339. Was 600 feet in the east the usual speed? A. No, sir.

XQ340. What other machines had attained it at that time? A. I don't know.

XQ341. Had more than one or two? A. Only a few— I don't know.

XQ342. I should like to know what those machines were, if you can refresh your recollection about it? A. I never saw any of them in the east at 600 feet.

XQ343. What was the highest speed that you ever saw? A. About 500 feet, there at Fort Edwards.

XQ344. And if any of the machines got up to 600 feet, or anything above 500 feet, it was because of specially prepared stock or some particular reason of that sort? A. I don't know.

XQ345. Of course everybody was looking for as much speed as they could get? A. Yes, sir.

XQ346. Now it is a fact, isn't it, that machines that were running, before Eibel came along, at comparatively low speeds, adopted high pitch in view of his success, and got a good deal higher speed; is that true? A. Why, I don't know as to that, that that is all the reason. There has always been a speeding up tendency; that probably helped.

XQ347. Well, isn't it a fact, just taking the bare facts, and regardless of reasons for a minute, isn't it a fact that, as soon as Eibel had put in this higher pitch at Rhinelander, a great many news machines did adopt it at once? A. Yes, sir.

XQ348. And didn't they, accompanying that adoption of these high pitches, begin to run at considerably higher speeds than they had before? A. Some mills, but not all.

XQ349. But taking them by and large, didn't they? A. Oh, I am not posted enough in the paper output to say that.

XQ350. Do you know of any mill that adopted this high pitch, following Eibel, that didn't increase the speed? A. Not unless it would be the mill where Oberley was. He pitched the wire on one machine, but my belief is he didn't increase speed.

XQ351. How much of a pitch did he put in? A. As I remember it, 11 inches.

XQ352. Do you know what his speed was? A. About 500 feet.

XQ353. You, however, don't know whether he did increase it or not? A. I don't think he did, because his motor wouldn't stand it.

XQ354. He probably had some reason for putting that in; what was his reason? A. I don't know.

XQ355. He probably got at least a better sheet of paper? A. I don't know; he always had a very nice sheet.

XQ356. Well, this Eibel idea spread pretty rapidly, didn't it? A. It spread; I don't know how rapidly.

XQ357. I mean to say, in 1907, by the end of 1907, wasn't

this high pitch the usual thing in news machines with which you were familiar? A. Well, some of the mills put it on, even when we built the machines flat. Some of the mills put on this pitch themselves, even though we built the machines flat.

XQ358. You mean— A. Put it on themselves, in the mill.

XQ359. Yes. Well, that is not quite the answer to my question. Isn't it a fact that by the end of 1907, this high pitch was pretty generally used on the news machines with which you were familiar? A. I don't know about the date; it gradually came into use.

XQ360. It came in pretty rapidly, didn't it? A. I don't know rapidly, no, because there were many doubters.

XQ361. What did they doubt; what was the reason for their doubting? A. A new thing; they wanted to see the other fellow try it out.

XQ362. Well, why did they need to see somebody else try it out; wasn't the desirability obvious? A. Well, Oberley didn't think so, until he went over and saw it. Some others were the same way, they had to see it and watch it, before they would adopt it.

XQ363. Why should anyone have doubts about it? A. Just because it is a new thing.

XQ364. Do you know of anybody else except Oberley going up to Rhinelander to see it, to see how it worked? A. Not personally.

XQ365. Have you talked with others who went up there? A. No, sir.

XQ366. Referring again to Mr. Hawley. You built his machine with a capacity for adjustment of 15 inches? A. About 15 inches, yes, sir.

XQ367. Now, you talked with him about it and discussed the building of the machine with him, I suppose, didn't you? A. More or less. Mr. Aldrich, my partner, did some of the detail work on that contract.

XQ368. What led him to put in that pitch or want that pitch put in, was this Eibel demonstration of it, that he witnessed up there, wasn't it, as a matter of fact? A. I don't know that.

XQ369. Well, you talked with him about the Eibel success, didn't you? A. Yes, I believe I did.

XQ370. And isn't there every reason to suppose that it was because of Eibel that he wanted that pitch put in his machine? A. It might be.

XQ371. Isn't there every reason to suppose it was?

Mr. Paul: Objected to as immaterial.

XQ372. Let's have the facts. I don't want you to guess, Mr. Ross, but I do want to have the actual facts. A. I don't remember any plain statement in that connection, or just why he wanted that pitch, except he was going to make all kinds of paper, from manila—heavy manilas—to light-weight print, and fruit wraps. And on these different kinds of paper and the different speeds and the different kinds of pulp he would use, he wanted an adjustable Fourdrinier end.

XQ373. Why did he want 15 inches? A. Well, I didn't ask him.

XQ374. You knew he went up to see the Eibel anyway? A. I don't believe I went with him.

XQ375. Isn't it a fact that the Beloit Company were proud of those Rhinelander machines, the work they were doing with Eibel's pitch? A. Naturally.

XQ376. You were proud they could get as much speed as they were? A. Yes, sir.

XQ377. Proud that on them this new idea had been worked out? A. Yes, sir.

XQ378. And didn't you send customers of yours up there to see the Eibel machines? A. We referred them to that mill.

XQ379. Now, it has been stated in this case, that prior to the time when Eibel got this idea of a high pitch, 400 or 450 was about the maximum at which ordinary machines could run? Is that in accordance with your views? A. In the west; but some in the east were running fast.

XQ380. As to those eastern ones, however, you can't tell us what they were? A. That one at Fort Edwards, New York, is the only one that I personally saw, that was going about 500 feet.

XQ381. Now, it has also been said that these same machines by adopting—after adopting the high pitch, following Eibel, were able to get considerably higher speeds, speeds as much as 600 feet; in some instances more. Is that also true? A. That is report; I haven't seen them.

XQ382. You have seen some of them in which that would be true? A. The only machine I ever saw running 600 feet or more, was Eibel's No. 1, 615 feet.

XQ383. Nowadays, that high pitch is looked upon as a practical necessity in the art, for a man that is going to make high speed news paper? A. Why, they claim a little better formation at that speed with the pitch—I am not paper maker enough to know all the points about it.

XQ384. Do you know what the theory of Eibel's pitch is? A. Yes the same as the high pond in the head-vat, to cause the

stock or pulp to have the same travel, the same speed of travel as the wire has, when it strikes the wire.

XQ385. And that is the purpose for which these modern high pitches are so generally used? A. I believe so.

XQ386. To get the stock under the influence of gravity, to attain a condition of speed equality with the wire? A. Yes, sir.

XQ387. Do you remember discussing with Mr. Thom, of the Kimberly-Clark Company, the Eibel process? A. No, sir, I don't.

XQ388. Do you remember whether he ever went to Rhinelander to see the Eibel machines working? A. Not that I know of.

XQ389. Referring to the Northern Paper Company's machines. Did you ever measure the actual elevation of the breast-roll in that machine? A. No, sir, I never did.

XQ390. By the way, can you produce, please, the specifications for that machine; can you bring the drawings; and the specifications for the King machine also? A. Yes, sir.

XQ391. In that King machine, do I understand the suction-boxes were raised when the breast-roll was raised? A. Yes, sir.

XQ392. This Northern Paper Company machine was put in in 1904, do you say? A. Yes, sir.

XQ393. When was the Hawley machine made? A. The Hawley machine was made four or five years after that, in 1907 or 1908; I haven't got it exact.

XQ394. Between the Northern Paper Company machine and the Hawley machine, did you make any Fourdrinier news machines? A. Between the Hawley and the Northern?

XQ395. Yes, between the Northern and the Hawley?

Mr. Paul: That's the Green Bay?

Mr. Lyman: Yes.

A. I am not clear on that; I would have to look up the records. After Rhinelander, we built one for the Tomahawk Pulp & Paper Company, and then one for Merrill; and I think one other before we built the Hawley, but I am not sure.

XQ396. Now, all those have adjustable Fourdrinier ends? A. No, sir.

XQ397. Now, was the Hawley machine the first one you made after you saw the Eibel high pitch? A. Well, I wouldn't say that, but I would say it is the first one that we made with the I-beam construction for the breast-roll and suction-box at the same time.

XQ398. Do you mean that the King machine was made after that? A. That is where I am uncertain, whether the King

and the Hawley were at the same time, or the King a little ahead of the Hawley; that is why I want to get the records here.

XQ399. Now, what has been the usual practice of your Company since the Hawley machine was made, as to raising the breast-roll, or the means for raising the breast-roll at the breast-roll end of news machines? A. There have been probably more news machines with Fourdrinier end adjustable than there have been with plain flat, but we have built very few news machines in the last five or six years; the trade has been going to Canada.

XQ400. Now, where you have made these news machines, since your Hawley machine, with the breast-roll adjustable, what has been the possible elevation above the level? A. Always about 15 inches; Hawley's machine—last machine—started up this year—had 24-inch.

XQ401. And what speed does he get on that 24-inch machine? A. He never has run it pitched that I know of. And he was running manilas—he just started up in January of this year—he was running the manilas at about 400 feet.

XQ402. Now, since Hawley's machine, you have made some news machines in which there has been no means of adjustment of the breast-roll? A. My recollection is that the Brainerd machine has no adjustment.

XQ403. Is that the only one you can think of that has no adjustment? A. For making print paper.

XQ404. Where is Brainerd located? A. At Brainerd, Minnesota.

XQ405. As that machine was actually installed, did the mill block up the breast-roll—the breast-end? A. I don't know; I never was in the mill. Mr. Aldrich had that contract under his wing, and I never was in the mill.

XQ406. You have mentioned of course a number of instances where there was some raise of the breast-roll above the level in certain machines, in all but one of which, as I remember your statement, this raising was due to an adjusting mechanism in the machine. Now, isn't it a fact that prior to Eibel's change on his machine, the general practice, that is, the usual thing, was to run the wire either flat or slightly up hill? A. Yes, or slightly pitched. Eibel was the first one to give it the excessive pitch.

XQ407. What do you mean by "Excessive pitch"? A. 15 inches.

XQ408. Now, taking these adjustable mechanisms which you, and I guess other builders put into their Fourdrinier ma-

chines to give the wire a slight up hill or slight down hill direction, what was the purpose of those adjustments—that depression or elevation? A. The lowering of the wire at the breast-roll end was generally for slow stock and heavy, wet sheets, to get more water out before it got to the suction-boxes. The lifting of the breast-roll was generally for helping the formation of the sheet.

XQ409. That is, you use the depression below the level with slow stock or heavy sheets, and the elevation above the level with quick stock or light sheets? A. Light papers, yes.

XQ410. To have the stock come down to the suction-boxes or the dandy-roll or place where the stock forms into paper at some particular degree of consistency? A. As near as possible.

XQ411. And where you had a slow stock, you ran the wire up hill, so as to allow the stock to remain longer on the wire, so it would drain more before reaching that place on the wire? A. It wouldn't remain on the wire any longer; but more water seemed to go out.

XQ412. The drainage—you got more drainage? A. That seemed to be the effect on certain stock.

XQ413. And, on the other hand, when you had a quick stock, by running the wire a little down hill, you gave that stock a shorter time on the wire, so it drained less? A. You naturally speeded up your machine on the light-weight papers, so the stock was on the wire a shorter time. With free stock, you have to carry more water down to the suction-boxes in order to have your sheet form good.

XQ414. You say, then, it was a matter of drainage, giving the stock a longer or shorter time on the wire, or getting more or less water out, as the case may be? A. Yes, sir.

XQ415. And is it your understanding that that blocking you saw at Fort Edwards mill was for the same purpose as these adjustments that were provided by the mechanism in the machines? A. That is my understanding.

XQ416. That is, they probably had a free stock or were making a light sheet? A. Yes, sir.

XQ417. Did you measure those blocks at Fort Edwards? A. No, sir.

XQ418. What mill was that? A. At Fort Edwards.

XQ419. I asked what mill it was? A. I didn't measure them.

XQ420. Who was the owner of the mill? A. I think it was part of the International Paper Company at that time. Mr. John Argy, Sr., was superintendent, and Mr. Cahoon was machine-boss. My letter of introduction was to him.

XQ421. John Argy, Sr., was superintendent of the mill? A. I don't know whether superintendent or manager, but my letter of introduction was to him. I don't remember his title.

XQ422. Did you notice whether in that machine the suction-boxes were raised by those wooden blocks? A. At Fort Edwards?

XQ423. Yes. A. Yes, they were pitched, the post at the suction-box section was—had about an inch block under it.

XQ424. That is, there was a broken joint in the rails, so that you had to have a separate block under the forward end of the suction-box section? A. Yes, the top rail was in two lengths.

XQ425. You simply saw that casually as you went there to see the other machine? A. Yes, sir.

XQ426. How do you know the speed at which that machine was running? A. I asked the machine-tender on the No. 1 machine, and I timed the No. 1, to check up on the machine-tender. The No. 2, I was told the speed of, but I didn't take it.

XQ427. Which was the No. 2? A. With the blocking under it.

XQ428. Do you know who told you the speed? A. As I remember it, Mr. Cahoon told me.

XQ429. As a matter of fact, were these adjusting mechanisms, such as the Moore & White mechanism, used very much in practice on the machines that had them? A. Well, I don't know that, because I am not around the mills much.

XQ430. They are pretty apt to get rusty, aren't they? A. We provided brass faces on all the joints, made the screws generally of brass, so they would not corrode; the pin on the hinge-joint was brass.

XQ431. You spoke about the cost of Fourdrinier machines running from $18,000 or $20,000 to $125,000 or $130,000. Are news machines the most expensive class? A. They are today. Still some board machines are nearly as expensive as the news machines.

XQ432. But the news machines would be up around $125,000 or $130,000? A. The modern wide machines would cost more than that, but they are extraordinary; they are not the ordinary standard machines.

XQ433. Referring to the Kimberly machines—you don't know if that apron-board was raised, so as to accommodate the pitch? A. No, sir, I don't know that.

XQ434. It was constructed with the apron-board flat, adjusted for a level wire? A. When it was erected in the mill, they had it set for a level wire, because they always start up the

machines at slow speed to get them limbered up.

XQ435. Well, do you mean then, when those machines were started up at Kimberly—were you there? A. No, sir.

XQ436. But you were there afterwards, when they were in operation? A. Yes, sir.

XQ437. Is it your recollection, when they first operated them, they ran the wire flat? A. I didn't see them when they were first started, but I did see them say two months after they had run, and both wires were flat then.

XQ438. How much later than that was it when you first saw that pitch, do you suppose? A. Oh, I should say it was a year and a half.

XQ439. And then they had—how much of a pitch did they have when you saw that pitch? A. Between three and four inches.

XQ440. Did you measure them at that time? A. No, sir.

XQ441. They are now running at a higher pitch than that, aren't they? A. I don't know.

XQ442. Have you mentioned all the machines you know of that, prior to the date when you saw that Eibel pitch, had an adjustment of more than two inches? A. All that I am sure of, yes.

XQ443. How did it happen that you put in the Moore & White adjustment on those Kimberly machines? A. They have a suspended Fourdrinier end with an adjustable shake that Mr. Thom was taken with, and he insisted on having it on these machines.

XQ444. What was the advantage of them from their point of view? A. They claimed a little better close-up of the sheet with their swing action on a suspended Fourdrinier end.

XQ445. The machines nowadays all have this pitch continuous from the breast-roll to the guide-roll, don't they? That is, there is no break in the pitch, as you defined it, at the suction-boxes? A. Why, the last time I was at Brokaw, Wisconsin, they had two machines there with a break in the pitch at the suction-boxes.

XQ446. Those are the only ones you know of? A. Those are the only ones I know of now.

Mr. Lyman: Cross examination suspended, pending arrival of drawings and specifications which the witness is to produce.

Adjourned until tomorrow, June 1st, 1917 at 9:30 a. m.

Morning session, June 1st, 1917, 9:30 a. m.

N. J. ROSS,

re-called, for further examination.

By Mr. Paul:

Q447. Mr. Ross, you were yesterday asked to produce certain specifications and blue prints or drawings. Have you obtained the same? A. I have a part that we found.

Q448. Will you state what specifications you have here? A. The specifications for the No. 1 King Paper Company machine, for the King Paper Company, at Kalamazoo, Michigan, contract dated 1901, and for the No. 2 machine, for the same firm, contract dated 1902; and for the No. 3 machine for the same firm, contract dated 1909. We also have the specifications for the No. 2 machine for the Northern Paper Company mills, at Green Bay, Wisconsin. This was formerly the Northern Tissue, but they changed their name.

Q449. Are these the specifications that you refer to (showing witness papers)? A. Yes, sir.

Q450. I notice that some of these specifications have pencil changes, particularly in connection with the size of parts. How do you explain that? A. Why, it is a common practice, and has been for a number of years, to use old specifications when we are getting up proposals on new work, simply to save dictating complete specifications to the stenographers, so that the pencil figures and words are for new propositions or specifications. Any changes that appear in ink, are part of the original proposition.

Q451. These pencil notations and changes don't form any part of the original specifications? A. No, sir.

Q452. The original specifications are as they appear here, minus the pencil changes? A. Yes, sir.

Q453. That is true of all these specifications? A. Yes, sir.

Mr. Paul: Counsel for defendant requests that the four specifications produced by the witness be marked, for identification, in the order named by him Q, Q1, Q2, Q3.

Q454. What drawings are you able to produce, Mr. Ross? A. I received the prints—blue prints—of the Moore & White suspension shake, for the No. 2 machine of the Kimberly-Clark Company, at Kimberly, Wisconsin, and that is practically the same as the No. 1 machine—the only difference would be in the width of the machine. Also have the elevation blue print of the No. 1, No. 2 and No. 3 King paper machines, built for the King Paper Company at Kalamazoo, Michigan. Also have the elevation blue prints for the No. 2 machine built for the Northern Tissue Paper Mills, of Green Bay, Wisconsin, that are now called the Northern Paper Mills, of Green Bay, Wisconsin. Also have the elevation print of the No. 1 machine built for the Rhinelander Paper Company at Rhinelander, Wisconsin. Also

have the print showing elevation of adjustable Fourdrinier end of a machine not recalled before, that was built for the United Railway & Trading Company, at Braithwaite, La.; it is 16 miles out from New Orleans. This mill is now owned or operated by the Easy Opener Bag Company.

Q455. Are these the prints that you refer to (showing witness blue prints)? A. They are.

Mr. Paul: Counsel for defendant asks that the Moore & White drawing produced by the witness be marked for identification Defendant's Exhibit R; and that the other drawings be marked for identification, in the order produced by the witness, R1, R2, R3, R4, R5, and R6.

CROSS EXAMINATION.

By Mr. Lyman:

XQ456. Referring to this Moore & White blue print, Exhibit R. This shows the adjusting mechanism that was put in on the Kimberly-Clark machines? A. To the best of my knowledge, yes, sir.

XQ457. Now, the adjustment was provided, I think you said, by turning a worm that operated a worm-gear, and the rotating of the crank turned and therefore raised or lowered a screw-threaded bolt which passed through its center, the worm-gear being screw-threaded at the center? A. Yes, sir.

XQ458. Will you please indicate these parts on the drawing; mark different letters showing these things. A. I have marked the threaded-bolt A; I have marked the worm-gear letter B; I have marked the worm-shaft letter C.

XQ459. The worm-shaft is rotated by hand, by a wrench applied at the end of the shaft, is it? A. The drawing shows a hand-wheel.

XQ460. Mark the hand-wheel with the letter D, please. A. I have marked the hand-wheel letter D.

XQ461. This worm-shaft, when rotated by hand, turns the worm-gear B, does it? A. Through the worm that is keyed to the worm-shaft C, yes.

XQ462. Which engages the worm-gear at its periphery? A. Yes, sir.

XQ463. And through the center of the worm-gear B, the threaded bolt extends, does it? A. Yes, sir.

XQ464. So that the rotating of the worm-gear raises or lowers the bolt A and with the bolt A the rails which carry the breast-roll? A. Yes, sir.

XQ465. In this figure, where you have marked letters A. B and C. is the wire shown in its level position? A. I don't

know; I suppose so—yes, sir.

XQ466. The scale of this drawing is one and a half inches to the foot, is it not? A. Yes, sir, that is the way it is marked.

XQ467. In this drawing, at that part on which you have marked the letters A, B and C, what is the position of the bottom of the threaded bolt A? A. I don't know. Their details here don't show that. We sometimes made a hole in our base-plate, so that that threaded bolt went down below the bottom of their stand; but I wouldn't say that that was so on this, as the drawings don't show it.

XQ468. The Moore & White patent 684,081, Exhibit K, under which this was constructed, shows that socket for the bolt terminating at the top of the base-plate, does it not? A. It shows the hole stopping in the bottom of their casting; it don't go through their casting on this cut here (witness refers to figure 4 of the Moore & White patent).

XQ469. The corresponding line in the blue print would be? A. About that point; about the point which I mark letter E, if built to their customary practice.

XQ470. Now, how far upward would it be expected that the bottom of the bolt could be raised, with reference to the worm-gear B? A. It should not get out of the hub of the gear.

XQ471. Well, the bottom shouldn't get into the hub of the gear? A. Oh, yes, that's common practice.

XQ472. Well, isn't it necessary—the whole weight of the machine depends upon that connection between the worm-gear and threaded bolt at that point? A. Yes, sir.

XQ473. And the machine is shaking? A. But the shake strain doesn't come on that bolt.

XQ474. But it wouldn't be the builder's intention, would it, to have the threaded bolt raised to a point so that the bolt had less of a bearing in the gear than the whole width of the gear? A. Not supposed to be, no, sir.

XQ475. Now, then, suppose that the bottom of the bolt at the present position of the breast-roll was at the level marked E, how much could it be raised above that point before it reached the level of the bottom of the worm-gear? A. If the machine was built according to this print, the screw wouldn't travel upwards over three and a quarter inches before getting even with the bottom of the worm-gear.

XQ476. You have no other drawings of this adjustment? A. None that I know of.

XQ477. Now, the bolt is shown projecting somewhat above the housing for the worm. How much is that shown? A. You mean the space between the housing of the worm and the cross-

tie?

XQ478. Yes. A. It is shown about two and a quarter inches, space between the top of the housing of the worm and the bottom of the cross-tie frame.

XQ479. If this threaded portion was intended to be utilized in order to lower the breast-roll that two and one-quarter inches below the level, that would mean, would it not, that the possible adjustment above the level, assuming that the bottom of the socket was at the level E, must have been only about an inch and a fraction? A. Not necessarily; there is a possibility in the construction of that—an offset hub on the worm-gear, so as to utilize that two and one-quarter inches of thread showing above the housing. Otherwise, there would be a waste of thread that could not get down to the worm-gear. There are no dotted marks in the housing to show the hub of the gear or the recessed casting. By making an offset hub worm-gear on the screw, they would be able to use two inches and a half of the screw on their downward adjustment, and also secure an additional raising limit, utilizing the entire length of the adjusting screw.

XQ480. Is there any such offset hub shown on these drawings? A. No, sir.

XQ481. And there is not, in fact, any on those machines? A. There is a possibility, because there is a line shown here.

XQ482. Now, coming to the King machines. In view of your further information and your blue prints and specifications, have you any change to make in regard to your testimony regarding them? A. Yes, sir. The testimony on No. 1 machine would be correct; on No. 2 machine, the adjustment above a level line would be about four inches, instead of about ten, as previously stated. The No. 3 machine would have the adjustment about ten inches as previously stated.

XQ483. The No. 3 machine was built in 1909? A. Yes, sir.

XQ484. No. 3 machine has the I-beams underneath the frame, which raises the whole Fourdrinier part, suction-boxes and all? A. Yes, sir.

XQ485. And in the No. 1 and No. 2 machines, the suction-boxes are stationary? A. Yes, sir.

XQ486. Are the No. 1 and No. 2 King machines the same? A. Practically the same; different in width and some little details.

XQ487. Was the adjustment above the level in the Rhinelander machines greater than the adjustment above the level in these King machines? A. My recollection is, there wasn't over an inch difference either way.

XQ488. Which was the one with the greatest? A. My recollection is, the Rhinelander machines had a little more adjustment than the King, but I am not positive on that. Very often in erecting these machines, the superintendent or foreman of the mill would ask to have the total travel made for a lifting instead of depression of the wire, and either iron or hardwood blocks could be placed under the guide stands and the lifting screw stand, and all of the travel thrown to elevate the breast-roll and not depress it any below the standard level.

XQ489. Well, we are talking now on the basis of these drawings; and I think you said that the Rhinelander machines had an adjustment of about five inches above the level, did you? A. That is my recollection.

XQ490. Is it your recollection, that it had a greater adjustment than any of these other machines you have referred to, prior to the Northern Paper Company machine? A. Yes, because the Rhinelander No. 1 machine was built for print and to run faster than any of the King or faster than the Northern, so that my recollection is, they did not care to have any depression of the wire, but took all of their travel on the elevation on the No. 1 machine.

XQ491. Now, what about this United Railway & Trading Company machine; what was that adjustment? A. I am not clear on the details of that. I had forgotten the machine entirely, and I don't know the travel that that had.

XQ492. Why was it you produced the drawing? A. Simply because it had the best detail drawing of our adjustment screw and mechanism that you called for that the boys could find.

XQ493. Now, on these No. 1 King and No. 2 King machines, have you any recollection as to whether they called for all the travel above the level? A. No, I haven't. Mr. Aldrich took the contract for all three King machines, and I wasn't familiar with all the little details that came up with their superintendent.

XQ494. What is the scale to which these various drawings are drawn? A. All of the Beloit Iron Works prints are three-fourths of an inch to the foot, except the print of the United Railway and Trading Company, which is an inch and a half to the foot. The Moore & White print is marked an inch and a half to the foot, but we are not familiar with their practice as to that. They worked out the details on that scale.

XQ495. You are, of course, acquainted with Mr. Burt L. Larson? A. Yes, sir.

XQ496. He is the mechanical draftsman for the Beloit Company? A. Yes, sir.

XQ497. And familiar with these machines and drawings?

A. Yes, sir.

XQ498. He testified about that Rhinelander machine in the case of the Eibel Process against the Remington-Martin Company, after producing the drawing of the Rhinelander No. 1 machine, that the total vertical adjustment of the breast-roll end was about three and one-half inches as shown by the Beloit records, and that of that three and one-half inches adjustment, two inches was adjustment above the level and one and a half inches was below the level. Would you be disposed to deny Mr. Larson's views on that? Now I can show you the blue print which he produced; I can show you copy of the blue print which he produced. A. The No. 2 machine was arranged a little different from No. 1. That is the only chance, a cross in his record, a mix-up in his record. No. 2 machine was built for fibers and manilas where there had to be a depression on heavy weight papers; but the No. 1 machine was built for print papers entirely.

XQ499. But Mr. Larson was testifying about the No. 1 machine, and the drawing he produced was of the No. 1 machine. A. That is the only way I can see that he would get mixed up between the two machines.

XQ500. Do you think he was mixed up? A. I think he was, because I attended to a great many of the details on those machines. I took the contract originally for both machines to be for fibers and manilas, and afterwards they changed the No. 1 machine to print papers; and there is a chance that he was referring to the records of the original contract, instead of the subsequent contract, on the No. 1.

XQ501. Well, let's see what this drawing shows. And first, I ask you if you know Edward A. Edmonds? A. Yes, sir.

XQ502. Mr. Edmonds was manager of the Rhinelander Paper Company until recently, wasn't he? A. Yes, sir.

XQ503. He testified in the same case to which I referred, that he actually measured the machines as they were in those mills at Rhinelander, and that on each of the machines the total —the utmost possible adjustment of those wires above the level was one and three-quarters inches, and that the two machines were exactly alike with reference to that. Would you be disposed to question Mr. Edmonds' word? A. Yes, because he is an office man and not a mill man

XQ504. He testified to the actual measurement of it? A. Yes.

XQ505. But you think he didn't measure them correctly? A. I think there was a mistake somewhere on that.

XQ506. You are talking now on the basis of the drawings or

some recollection? A. Recollection of talks with their superintendent at the time the No. 1 was built.

XQ507. Have you ever measured those yourself? A. No, sir.

XQ508. With reference to your drawing of the No. 1 Rhinelander machine, is the part which I mark A, the ball thrust bearing? A. It should be in that location.

XQ509. What is the purpose of the ball thrust bearing? A. To assist in the easy operation of the adjustment.

XQ510. In other words, take the weight of the machine? A. Yes, sir, it takes the pressure or weight of the machine.

XQ511. In this arrangement used on this Rhinelander machine, which is it that rises, the threaded bolt or the worm-gear? A. The worm-gear.

XQ512. And the bolt is stationary? A. Yes, sir.

XQ513. Now, the top of the thread on the bolt must never go lower than the top of the ball thrust bearing? A. It should not.

XQ514. Will you then, please, measure the threaded portion of the screw, as shown on this drawing, above the top of the ball thrust bearing, and tell me how much it is. A. Well, I should say that a small scale drawing of this kind would hardly be exactly reliable, because this was intended as an outline drawing for construction and erection purposes, and not a detailed drawing for making the screw, the ball bearing, the worm-gear or worm.

XQ515. Well, assuming that that is true nevertheless, what is that distance as shown on this blue print? A. I would have to know definitely where the line of the ball cage is. This drawing has no mark showing definitely where the ball cage line is.

XQ516. Well, approximate it, please, as well as you can. I understand that it may not be correct by detailed drawing. A. May I refer to the larger scale drawing?

XQ517. Certainly. A. As near as I can measure, it is two inches from the center of the shaft to the top of the ball bearing, and two inches there, would be that mark—would be about three inches from the top of the ball bearing cage to the end of the screw as shown on the general drawing of the Rhinelander No. 1 machine.

XQ518. Can you identify this drawing of the Rhinelander machine, which was in evidence in the other case, and which was there marked as an exhibit, as a larger drawing of this No. 1 Rhinelander machine? A. In a general way, it looks like it; that is all I can say.

XQ519. Well, will you make a similar measurement on that

drawing and see what you find as to distance between the top of the ball thrust bearing and the top of the screw? A. This only shows two and one-quarter inches.

XQ520. Well, if the machine was constructed as shown in these drawings, then the possible adjustment of the wire above the level would not have been over two inches, would it? A. That will be the practical adjustment.

Mr. Lyman: It is noted that the large drawing shown the witness, in connection with the preceding question, is the one which appears in volume one of the record in the Eibel Process Company v. Remington-Martin Company, at page 149, and which is marked Plaintiff's Blue Print drawing of No. 1 Rhinelander machine.

XQ521. Referring to blue print of the King machines, do they show substantially the same adjustments as the blue print of the Rhinelander machines? A. The same general construction is on both machines.

XQ522. They show no greater adjustments than the Rhinelander machines? A. No, sir.

XQ523. Referring to the blue print of the United Railway & Trading Company's machine. Will you make a similar measurement and see how much possible adjustment above the level there is of the breast-roll, as shown on that blue print? A. The top of the cage of the ball bearing is not definitely shown, but I should say about two inches of thread extended above the cage of the ball bearing.

XQ524. How much adjustment below the level would there be, provided in that machine? A. About two and one-quarter inches.

XQ525. So that, in that machine, there would be a total adjustment of about four and one-quarter inches, with two above and two and one-quarter below the level? A. As shown on the drawing, yes, sir.

XQ526. Drawings of the Rhinelander machine and of the King machines Nos. 1 and 2 also show adjustments to be operated to depress the breast-roll below the level? A. I believe they do.

XQ527. Of course Mr. Larson is a man who is thoroughly familiar with these details, isn't he? A. The detail is made up in the drawing room, but not always the details of erection in the mill.

XQ528. Have you the contract that went with this Northern Paper Company specification? A. That is the contract.

XQ529. There was another contract, A. No, sir.

XQ530. How much did you say the adjustment provided in

the Northern Paper Company machine was? A. Why, the total adjustment, about five inches.

XQ531. How much was below the level? A. I should say four was above level, as completed.

XQ532. How much below the level? A. About one inch.

XQ533. Why was it that you built that Northern Paper Company machine with no joint in the rails, so that the suction-boxes would be raised when the breast-roll was raised? A. The main reason was because it only had a 40-ft. wire, and the theory of many old paper makers was that with a short wire if the boxes were stationary, the wire would be a little apt to kink or cut itself by having all of the shake stop at the suction-boxes on the short wire, where, if they had the long wire, it had that longer shake, and the boxes with the shorter wire going with the wire didn't strain the wire, because the boxes vibrated with the wire. The wire has to vibrate with the breast-roll; the amount of vibration reduces as you get down toward the guide-roll.

XQ534. That was your idea, rather than Fogarty's? A. It was talked of between us as being common practice on short wires.

XQ535. I mean by Mr. Fogarty, Mr. J. C. Fogarty, who was then superintendent of the Northern Paper Company? A. Yes, sir.

XQ536. How did you happen to give that machine a greater amount of adjustment than you had other machines? A. It was intended to have it, on account of his making tissues, tissue papers a part of the time on the machine.

XQ537. It was because he wanted that? A. Yes, sir.

XQ538. Mr. Fogarty, in the Remington-Martin case testified that the reason he wished this adjustment in that machine was that he was going to make tissue paper and "For it is a very thin sheet and the water leaves it very quickly, and that was my idea; and I wanted it so when it was running at a good rate of speed, I could carry the water down to the dandy-roll and make a good sheet of paper." Is that your idea of the purpose of it? A. In a general way, yes.

XQ539. Now, what was the speed for which that machine was originally built? A. I don't remember.

XQ540. Mr. Fogarty said it was 300 feet per minute. Is that correct? A. You can refer to your specifications; I don't remember. The specifications as signed, called for a range of speed of the machine from 125 to 350 feet per minute.

XQ541. Mr. Fogarty testified that after the machine was originally built with a maximum speed of 300 feet, that it was

subsequently changed by new pulleys, so as to give a maximum speed of 337 feet. Do you recall such? A. I don't remember that.

XQ542. The tissue paper stock is quick or free stock, is it? A. I am not a paper maker.

XQ543. Now, referring to the Northern Paper Company machine. I find that Larson testified, in the Remington-Martin case, that the machine with the adjusting screw, as originally specified, there would be a breast adjustment of a little less than two inches above the level, and an inch and a half below the level. Do you agree with that? A. I don't know where he got his specifications; it is not noted in the contract.

XQ544. Well, taking your drawings, do you find anything there to give you any different view? A. No, that is a general drawing.

XQ545. You wouldn't care, then, without more information than you have, to question the accuracy of Mr. Larson's statement? A. No, sir.

XQ546. You never measured the pitch in the machine as actually constructed or operated? A. No, sir.

XQ547. Now, referring again to the Fort Edwards machine that you spoke of yesterday. When was it you made that trip, did you say? A. July, 1898.

XQ548. 1908? A. 1898.

XQ549. And what did you say was your recollection of the amount of thickness of those blocks? A. About five or six inches under the breast-roll end.

XQ550. Now, have you any means of knowing that the wire on that machine, if there had been no blocking there, would not have been running up hill? A. No, sir.

XQ551. So that the total pitch on the wire might have been less than five or six inches? A. It couldn't have been much, because it attracted my attention. When I went there, the wire seemed to be running down hill so much, and in walking along the machine, I noticed those blocks under the stands.

XQ552. As a result of seeing that machine, you didn't make any difference in your own future machines? A. Not at once.

XQ553. Well, when did you first? A. The earliest date I have record of is 1901; but there might have been others previous to that.

XQ554. You mean you put in that adjusting mechanism in the United Railway & Trading Company's machine in 1901 as a result of what you saw at Fort Edwards? A. No; there was a growing feeling among paper makers that the pitched wire was the thing to have, and they were asking the machine build-

ers to construct machines so that they could pitch the wire when necessary. And having seen this in operation, we were not in position to dispute their statements, when they stated it was a good thing.

XQ555. Was this United Railway & Trading Company machine the first one you put in an adjustable end? A. I wouldn't say it was, because we built several machines right close in that time. The King Paper Company machine contract was taken in November, 1901, but I wouldn't say which machine was delivered first.

XQ556. Well, was the adjustable Fourdrinier end put in for the first time by the Beloit Company in one of these machines? A. I wouldn't say that; I would have to look further.

XQ557. Don't you know whether it was put in before 1898? A. I don't know that it was; I never saw it.

XQ558. You don't know whether it was before 1898? A. No, sir, I don't; it wasn't by us.

XQ559. I mean by Beloit? A. Not by us before 1898; that was the first pitched wire I ever saw. I mean by that over an inch or so pitch. We had set up machines running up hill about an inch, and running down hill about an inch. But I didn't call that any pitch. When it got to five or six inches, that made us shake our heads.

XQ560. That was a different thing? A. Yes, sir.

XQ561. Why didn't you give the machines of the United Railway & Trading Co. five or six inches pitch? A. They were making book papers, heavier papers.

XQ562. Slow stock? A. Slower stock and a heavier weight, thicker sheet; they had a peculiar stock. Their wire, as I remember it, was 70 feet long,—because they were going to use refuse sugar cane for their pulp, to make their paper of. We had done work for a mill at Sugarland, Texas, where they were using the same material, and they had told us that was slow stock. We are not paper makers, I don't know it; we take their word.

XQ563. Referring again to these Kimberly-Clark machines, the blue prints show that the suction-box covers projected under the supporting rails. A. That is my recollection that they were made that way.

XQ564. Do you know at what speed the Northern Paper machine was run on that tissue? A. No, I do not.

XQ565. About 200 or 225, or thereabouts, feet per minute? A. I should say along there on their ordinary papers but they must have run on some papers higher, or he wouldn't have called for those pulleys to get it nearer the contract; our con-

tract called for 350 feet.

XQ566. Do you happen to know whether the adjusting screws on the Kimberly machines have been changed? A. I don't know.

XQ567. I believe you said that the reason you put in the adjustment which you did on the Northern Paper Company machine, was because Mr. Fogarty asked for it? A. Yes, sir; he had to pay extra to get it.

XQ568. Now, as I understand your corrected testimony, in view of your additional information in connection with the King machines, the Northern Paper Mill's machine was the first one which your company built in which any change in the position of the suction-boxes was contemplated? A. Well, it was the first one we built with the continuous type of rail, with the adjustable combination feature.

XQ569. And that means that it was the first one in which there was any change in the position of the suction-boxes contemplated when the wire was elevated? A. Yes, sir.

XQ570. The next one after that, was the Hawley machine of 1907? A. That is the way I remember it, yes, sir.

XQ571. The adjustment that was provided in the Northern Paper Company machine was the highest you had put in up to that time? A. I don't remember the adjustment on the Riverside Paper Company; but I am reasonably sure that the Rhinelander No. 1 had as much elevation above the level, or about the same, as the Northern.

XQ572. The Riverside presumably had about the same as the United Railway & Trading Company's? A. I think so, it was for about the same class of paper, book paper and ledger paper, but I am not sure now.

XQ573. The Rhinelander No. 1 and the Northern Paper Company had the highest possible breast-roll adjustments that you had put in up to the time when you made the Hawley machines? A. Unless it might be the Kimberly-Clark Nos. 1 and 2.

XQ574. When you came from the Fort Edwards mill, you proceeded to build your Cloquet machine? A. Yes, sir.

XQ575. Did you put in any adjustment on that machine? A. No, sir, not as I remember.

XQ576. Why not? A. Well, their superintendent said it was a new thing; he didn't want to try it out. I talked with him after my trip there, but he said he was starting a new mill up in a backwoods country, and he didn't want to try any experiments.

XQ577. What, by the way, is the speed at which that late

Hawley machine, which you said had the 24 inch pitch, is built to run? A. 600 feet.

Mr. Paul: You mean up to 600 feet?

The Witness: From 30 to 600 feet.

XQ578. Now, you spoke about a Canadian machine that was put in about the same time as the King No. 3 was put in? A. No, that was put in before the King No. 1; but I don't remember the details of it, and I don't remember the date exactly; but I think it was before the King No. 1. I meant to have sent for the print of that last night, but I didn't.

XQ579. That was presumably about the same time as the United Railway machine? A. It wasn't as big a machine, and probably didn't have very much adjustment.

XQ580. I believe you said yesterday that you had heard rumors of some machines in the east that were running at a speed of 500 feet or more before your heard of Eibel's high speeds? A. I saw one machine running in 1898 at 500 feet.

XQ581. That was the only one you had in mind making that statement? A. No, I had heard reports of others, but I didn't see them.

XQ582. What were those others? A. Print machines.

XQ583. Do you know what they were? A. No, they were built by the Pusey & Jones Company, but I don't know the mills they were in.

XQ584. They were running about 500 feet? A. Yes, sir. I think one was at Glenn's Falls, but I am not sure.

XQ585. You don't know anything about that personally? A. No, sir.

XQ586. And the rumor said they were running at 500 feet or more? A. Some said a little over; but 500 feet was what we were all aiming to establish about that time. The Rhinelander No. 1 machine called for high speed at 500 feet.

XQ587. That was high speed in 1904? A. Yes, sir.

XQ588. 500 feet was high speed in 1904? A. Yes, sir.

XQ589. For your own machines? A. It was for us.

XQ590. Well, it was for the art generally, if it was for your trade? A. Yes, sir.

XQ591. I don't want to embarrass your sense of modesty, but I always supposed the Beloit was pretty well in the forefront in paper making machinery? A. We have tried to keep up with the procession.

XQ592. You admit that gentle accusation? A. Yes, sir.

XQ593. Now, is it fair to say that many of those machines which in 1904 were running at less than 500 feet, have been able, by putting in the pitched wire, to get speeds a good deal

in excess of that? A. Well, I don't know that, because I haven't seen them; but I know that they were from a number of machines—I know that a number of machines were running 500 feet in 1904, with practically flat wires, if you can believe what so many tell you. Our Cloquet machine that we built in 1898 had a speed of 500 feet, but they never got up to it, because their men weren't broken into high speed; that was a thing they had to be educated in, carrying the end over, preparing their stock, all those paper maker tricks. The machine itself was capable of running that speed.

XQ594. Now, did those machines have pitches in them? A. I don't know whether the Cloquet has ever been pitched or not.

XQ595. I mean the same class of machines that you had in mind when you spoke about those speeds, and their running at a good deal higher speeds than that? A. It has been the tendency to elevate their breast-roll since this Eibel experiment came out.

XQ596. Well, that elevation of the breast-roll has been accompanied by speed increases? A. There have been speed increases all the while, because I set up machines when the high speed was 130 feet. People came from all over to Appleton to see the Beloit machine run 130 feet. That was in 1882. Now they got up to 500 feet, without any pitched wire, so that there had been a gradual increase in speed by the trade to get production, as the price of paper went down, to get more production.

XQ597. You say that the pitched wire is only one of a succession of changes that have brought about increased speed? A. I would say so.

XQ598. Now, is it fair to say that that change has brought about an increase of anywhere from 25 to 50 per cent—had brought about an increase of speed? A. I wouldn't say an increase of 25 per cent, because they were all running 500 feet with flat wires. 600 is about the limit men can handle the paper.

XQ599. Would you say from 500 to 600, 20 per cent? A. Yes, sir.

XQ600. In some cases, it has been a little more than 20 per cent? A. Oh, a little more, but we haven't any records that they keep it up; they make spurts for a record, but they don't maintain it.

XQ601. Do you believe, before Eibel came along, those 500 foot speeds you mentioned, were really maintained? A. Oh, yes, their production showed that.

XQ602. That is a point on which you haven't any personal

knowledge? A. Only the reports from the mills.

XQ603. But can you name any others except one at Glenn's Falls and Fort Edwards? A. No, sir, not definitely now.

XQ604. By the way, that King No. 1 machine had the same sort of an adjustment that the United Railway & Trading Company machine had? A. The same general design, yes, sir.

XQ605. And about the same possibility of adjustment? A. Very nearly the same.

XQ606. And the King No. 2 machine was about the same as No. 1? A. Very nearly, yes, sir; that is, as far as the elevating principle was concerned; they were of different widths.

XQ607. Is the pitched wire now regarded as practically an essential in those machines, would you say? A. It is a great help. They don't have to be quite as particular, perhaps, in preparing their pulp, and don't have to give as heavy a side shake to the Fourdrinier end.

XQ608. No one would think of building a news machine now without it, would they? A. Why, he would like it probably if he could get it at a reasonable cost.

XQ609. He would insist on it, as a matter of fact, wouldn't he? A. If he wanted to do business in competition with the others. I would have to look up the Brainerd machine to be sure of that; that contract was made about a year and a half ago.

XQ610. Leaving that aside, and I understand you don't know whether that is pitched? A. I don't know whether that is pitched or not.

XQ611. That is the only news machine you know of that is not run with a pitch? A. No, I wouldn't say that.

XQ612. What other do you know of? A. I have not been around the print mills recent years as much as formerly, so I don't know just what their practice is now. My age excuses me from a lot of that traveling.

XQ613. Which one of the various drawings and blue prints and specifications that I asked for yesterday, that you tried to get, did you not succeed in getting in the limited time you had? A. I didn't get the blue print for the No. 1 Kimberly adjustment, the Moore & White print. The one here is for their No. 2, but they are practically the same, except the width.

XQ614. The width of the wire? A. Yes, sir; that is the only one I had on the list that you spoke of.

XQ615. Were there any others you tried to get? A. I tried to get more of the detail of the Moore & White screws, on that travel, but it was so old that he said on the 'phone, he didn't know whether he had it or not; he would send all he could find

This is all I know about.

XQ616. You spoke yesterday of the machines that you had built for the Tomahawk Pulp & Paper Company, and for Merrill. Do you think those were built between the time when you made the Northern Paper machines and the time when you made the Hawley machine? A. They were made soon after the Rhinelander, but I don't know—I think the Tomahawk machine was made before the Northern Paper Mill machine, but I am not sure.

XQ617. Mr. Larson mentioned three machines which were built between the time the Northern Paper Company machine was built and the time the Hawley machine was built, and said that they were the Tomahawk machine, the Merrill machine, and the Watab Pulp & Paper Company machine. Is that probably correct? A. That probably is correct—Watab No. 1 machine.

XQ618. And those machines he said that there was no adjustment provided for the breast-roll, but the wire was level? A. That is my recollection.

Adjourned until two o'clock this afternoon.

Afternoon session, two o'clock.

Cross examination of Witness Ross resumed by Mr. Lyman.

XQ619. Referring again to the Moore & White drawing of the adjustment that was put in on the Kimberly machines, will you please look at the drawing of the adjustment, which is shown at the right-hand lower corner of the blue print. I ask you if the part which I have marked F is the same thing as the part which I have marked F in the drawing in the upper left-hand half of the blue print, namely, that portion of the screw-threaded bolt which goes through the I-beam or rail? A. It looks to be the same, but there is nothing to indicate a square top on the lower right-hand view, as compared with the upper left-hand.

XQ620. Well, doesn't the part which I mark G indicate that square upper-end? A. There is no mark there to show the corner square.

XQ621. It might, however, be the same thing? A. It might be the same thing, yes, sir.

XQ622. Now, the part which I mark A on this drawing, at the right-hand lower corner, is the screw-threaded portion of that bolt which is marked A on the view at the left-hand of the blue print, is it not? A. It corresponds to that, but it isn't marked "threaded."

XQ623. Now, this bolt, as indicated in this drawing at the right-hand lower figure, is shown as projecting into the worm-

gear, which I mark B, is it not? A. There is a dotted line there, which might be intended for the screw or the cored chamber in the casting. I am not familiar enough with their construction to say which that is.

XQ624. Well, the part G shows, doesn't it, that it is the bolt that is shown there? A. We have assumed that was the same, but there is no dotted lines in the upper left-hand cross-section view of it that shows where the screw, letter A, stops in the housing.

XQ625. Yes, but in the right-hand lower drawing is what I am referring to? A. That may be the screw in the dotted line, or the cored chamber in the casting.

XQ626. Well, if that is the cored chamber in the casting, then my question is, how you explain the presence of the projection G at the top of it? A. Well, we were assuming that that projection G was the top of the screw, but it doesn't show the square-end that it does on the other cut in the left-hand cross-section.

XQ627. Well, it can't be anything else, can it? A. I don't know.

XQ628. You think it is probably that screw? A. It is probably that screw, but I don't know it.

XQ629. Well, assuming that it is the screw that is shown there, the screw is shown at its extreme upward position, is it not? That is, it couldn't rise higher without going outside the worm-gear? A. Not unless the worm-gear had an offset hub.

XQ630. There isn't any such offset hub shown, is there? A. It doesn't show there is any

XQ631. There is no indication that there is any, is there? A. I don't see any, any more than I did any indication of a threaded screw here on this view. The drawing is not a complete drawing, and I am not familiar with all their details of construction.

XQ632. Now, the position in which the breast-roll there is shown is with the wire level, isn't it? A. We assume it, yes, sir.

XQ633. Well, the measurement 3 ft. 5 in. at the front and toward the rear, on this figure, shows that, doesn't it? A. Yes, sir.

XQ634. Then it follows, doesn't it, that if that screw, that the only adjustment provided in the machine, as shown in that drawing, is an adjustment for the breast-roll below the level? A. If the dotted lines indicate the screw, that would be a correct assumption.

XQ635. And unless the dotted lines indicate the screw, have

you any explanation for the presence of that part G in the figure? A. No, sir, because that isn't squared to show the top of the screw.

XQ636. Now, referring again to the Rhinelander machine No. 1. What did you say was your recollection of the amount of vertical adjustment at the breast-roll? A. I wouldn't say the total adjustment was over five inches on the Rhinelander machines—possibly a little over.

XQ637. Of which about how much was above the level, in your recollection? A. The machine was intended to be set up with all the adjustment above the level. I don't know whether it was or not, on the No. 1 machine.

XQ638. Well, with the adjustment partly above and partly below the level, how much was above the level and how much was below the level? A. The No. 2 machine was between 2 and 3 inches above the level and an inch or two below the level. And originally No. 1 was contracted for to be a duplicate in width and adjustment of the No. 2, but that was changed later.

XQ639. After the machine was set up? A. No, sir, before it was built. The machine was changed in width and type from a machine to make fiber and manila papers, to one to make print papers.

XQ640. Well, now, was that Rhinelander machine—did that Rhinelander machine have a greater limit of adjustment than the King machines, for the same numbers, 1 and 2? A. That is my recollection, that No. 1 of Rhinelander had a little more adjustment than the King.

XQ641. Now, you say that No. 2 of the Rhinelander had about the same as King? A. About the same as King, as I remember, the total adjustment.

XQ642. And your recollection of the Rhinelander No. 1 would be that it was the same as No. 2, except width and total adjustment above the level, equal to the sum of the adjustment below the level and the adjustment above the level, in the Rhinelander No. 2? A. Yes, sir.

XQ643. Referring to this drawing of the Rhinelander No. 1 machine—I mean the one that was involved in the Remington-Martin case, page 149, volume one, of the record in that case—I see that there is a standard or guide marked M, at the right-hand lower drawing of the figure? A. Yes, sir.

XQ644. What is that standard or guide? A. That is to stop inside vibration of this lower rail.

XQ645. Now, there are a series of such standards along the length of the rail, two at least—there are three here. A. Three here.

XQ646. Now these standards have lugs that project out over the top of the rail, which is marked E in this figure, haven't they? A. They straddle it entirely, bearing on both sides of the rail.

XQ647. Then there is a cross-bar at K in this figure, which goes over the top of the rail? A. There is a cross-bar at that point (indicating); K does not seem to point to any particular thing. L is indicated, M is indicated, but K isn't indicated.

XQ648. Is the bottom of it shown at the line at which the arrow, indicated by M, points? A. I assume that is the bottom of the cap.

XQ649. Now, that cross-bar limits the upward motion that is possible for these rails? A. If set on the foundation as shown, it would.

XQ650. Will you measure, please, on this drawing the distance from the top of the rail E to the bottom of this cross-bar, and see how much the rail could be raised at this point before it came in contact with that cross-bar that limits its upward motion? A. Above one inch and three-quarters.

XQ651. Now, if the machine was set up with the standards as shown in this drawing, and also as shown in the drawing of this machine, which you produced, and which is marked Exhibit R4, that means, doesn't it, that the utmost possible extent of adjustment of the breast-roll above the level on that machine would be one and three-quarters inches? A. If the machine were erected according to these drawings, that would be about it, yes, sir.

XQ652. Now, referring to the blue print of the Northern Paper Company machine, isn't there the same limiting element there? A. The elements are there, but the measurements are a little more, about two and one-quarter inches clearance, if erected according to the print.

XQ653. That is, if that machine were erected according to the print— A. Yes, sir.

XQ654. —It wouldn't be possible to raise the breast-roll above the level more than three and one-fourth inches, you say. A. About three and one-fourth inches, yes, sir.

XQ655. Now, I see in this contract for the No. 1 King machine the provision that the table-roll rails are "To be adjustable, at least one and one-half inch pitch, three-fourth inch above and three-fourth inch below level." Doesn't that mean that the adjustment of the breast-roll contemplated in that machine was three-fourths of an inch above the level and three-fourths of an inch below the level? A. That adjustment was entirely outside the Fourdrinier end adjustment referred to in

another paragraph, "The Fourdrinier part for wire 60 feet long, 7 feet wide, the same to be our new adjustable type if preferred." And they decided to take that according to the drawing.

XQ656. Did this table-roll adjustment have anything to do with that? A. No, that was outside of that, and that was mostly before any of this pitching came in. I referred to that in my testimony once before, about the table-rolls having an independent adjustment for each roll and also the rails, raising and lowering the whole group of rolls. That is what that refers to. I think you will find the same provision on the King No. 2 machine, if you look under the same head.

XQ657. I think there is. Now, referring again to the matter of speeds of news machines. I believe you said that in 1882 150 feet was looked upon as a high speed? A. 130.

XQ658. 130; and that there were rapid advances in speed after that, and that in 1898 one machine was running as high as 500? A. Yes, sir.

XQ659. Now, then, there seems to have followed a period when increases of speed ceased, for you say in 1904 the Eibel machine which was calculated for 500, was a high speed machine in those days? A. Yes, sir, at that time.

XQ660. Well, then, is it fair to say that these speed increases had continued from 1882 or thereabouts up to 1898, and then had come to a stop, until Eibel's machine? A. I wouldn't say that that was a fair statement, because different ones were working on little things about the adjustments of the machines, and the preparation of their pulp, and gradually getting higher speeds,—to get higher speeds.

XQ661. But they hadn't succeeded? A. Well, it hadn't succeeded as a common thing. The common report is that some mills were running above 500 feet, without the pitch. Now, this gradual growth from 130 feet to 500 feet was brought about by little things. There was no one radical thing that jumped the speed, except the necessity for more production to keep down the cost.

XQ662. Well, would you say that there had been any substantial speed increase between 1898 and 1904 and 1905? A. I have no record of it.

XQ663. Those you had in mind at any rate, in testifying this morning, came prior to 1898, when you saw the machine at Fort Edwards? A. There were very few machines at that time, 1898, that had got to 500 feet a minute. One reason of that was, they didn't have the press capacity and the drying capacity, and the forming capacity. And that machine that I saw running at 500 feet had three presses, which is one of the

improvements which had come up in developing speed.

XQ664. And are those the only limiting factors there were at that time? A. Lack of experience was one thing.

XQ665. How about motion on the wire? A. What motion do you mean?

XQ666. Commotion disturbances? A. That was being helped by changing their head-vats. That was one development that helped on the speed, carrying higher heads. When we made our machines—when the machine was made that ran 130 feet, we could only carry about two inches and a half of head, and at this 1898 period, they were getting up nine inches of head.

XQ667. How many inches of head did they have on the vat at Fort Edwards? A. I didn't notice.

XQ668. Probably nine inches? A. That was getting to be common practice at that time, but I didn't notice their head.

XQ669. What heads are customarily carried now on news machines? A. Anywhere from no head to 18 inches.

XQ670. Well, however that may be, is it a fact that the commotion, the increasing disturbance and commotion on the wire, when the men tried to run at higher speeds, was a factor that limited that? A. That was one factor that helped—the formation of the sheet.

XQ671. In those days, was nine inches looked upon as the limit of the depth of the head you could carry? A. Which day?

XQ672. Well, I mean 1898 to 1904, along in there? A. Why, that had come to be common practice on print machines.

XQ673. Was it regarded as the limit? What reason is there, if any, why they thought they couldn't carry higher heads? A. The paper makers hadn't called for our machines to be constructed to carry over nine inches. The head that they could carry, was regulated by the height of the slice over the wire. And that was all that they had called for, and we hadn't made them over nine inches. That was a gradual step up.

XQ674. Wasn't it necessary, in order to produce higher heads than eight or nine inches, to change the design of that end of the machine, in order to prevent the carrying of the weight of so much water as a direct load upon the wire? A. The location of the slice was changed, so that it was about over the center of the breast-roll, instead of being over the fourth or fifth table-roll.

XQ675. When was that change made? A. I don't know.

XQ676. It wasn't made until after those days? A. Why, about the time we were figuring on increasing the depth of the

slice—we were moving the slice towards the breast-roll, because the weight of that water was wearing out the apron on top of the wire that extended to the first slice.

XQ677. Well, now, isn't it your recollection that that didn't take place until within a few years, say within the last ten years? A. It is about that time. Of course we had to raise the side of the head-vat—those little mechanical things; the millwrights already in the mills, well, they were experimenting.

RE-DIRECT EXAMINATION.

By Mr. Paul:

RDQ678. I notice that the several specifications which you have produced, are all very much alike. Did you have any sort of a general form for these specifications, which was largely followed? A. Yes, sir.

RDQ679. Can you explain the character of the specifications, what they were intended to cover; how far they were intended to go into detail; and how much was left for other arrangements? A. They were intended to cover anything that would affect the price of the machine materially. The diameters of the rolls, generally the thickness of the shells on the rolls; the diameter of the drying cylinders; the diameter of the calender rolls. Such parts were always specified in these propositions.

RDQ680. And what about the drawings? A. The drawings had to be submitted in nearly all cases to the superintendent of the mill, and the detail arrangements approved by him before we built the machine; and we have always tried to meet the superintendent's ideas. If he called for changes in details that meant more or less expense, a written proposition was made and attached or used as a part of the contract, so that when it was billed out, that was covered; and we have always felt that the superintendent was being held responsible for the operation of the machines by his manager, and that we had to make it satisfactory to the superintendent, so as to get a pleasant settlement at the end of the contract.

RDQ681. Now, those written memoranda, or whatever was made in reference to the changes, would those be preserved, and if so, for what length of time? A. Any ordinary changes were made—any ordinary details, the arrangement of them was gone over generally with the superintendent verbally, and notes made, and those notes were kept in our office until the machine was accepted and paid for, and then generally destroyed, because they accumulated and took up so much room.

RDQ682. Were the several specifications you have produc-

ed here worked under in this general way that you describe? A. Yes, sir.

RDQ683. What was the practice as to variations from drawings that might come up, while the machines were being erected? A. If there were no radical changes necessary, the erecting man had instructions to arrange the machine to suit the superintendent. If those changes in the erection involved new material, then it would be taken up with our office. Many of the paper mills have fairly good machine shops of their own. In some cases, they have changed the rolls themselves, before the machines were erected; in other cases, they would change the position or height of the roll stands. Simple changes that we wouldn't have any record of, unless our erecting man reported them.

RDQ684. Now, after going over these matters as you have been doing in the last couple of days, and reviewing the specifications and drawings, please state whether you have seen anything to cause you to change your testimony as to the amount of travel provided in the vertical adjustment of the Kimberly-Clark machines at Kimberly? A. No, my recollection is that that detail was worked out with Mr. Thom, and that he wanted about eight inches total adjustment; and as the entire contract for the two machines was left with Mr. Thom, and a written notice received by us from the Kimberly-Clark Company that the machines would not be satisfactory, unless they were approved by Mr. Thom, we, of course, tried to work with Mr Thom to give him the machines he wanted.

RDQ685. You are positive that provision was made with reference to the adjustment? A. That is my recollection of it.

RDQ686. Does the examination of the drawing which you have produced, that came from Moore & White, make any change in your testimony on that? A. Not a bit. It is a very general drawing. All that we had occasion to call for that for was to show something on our elevation, so that our parts would join in with their parts, as we made all the rolls, save-alls, top rails; and such parts, to complete the Fourdrinier end.

RDQ687. Just what did they furnish, that you recall? A. I would have to refer to their print. (Witness examines print.) As shown on this print, the Beloit Iron Works furnished the breast-roll, the two top steel rails, 7 inches by 2 inches, and the short rails that extended over the suction-boxes, that are partly shown, with the brass bolts to hold those to the top of the posts. The balance of the material shown on this blue print, was furnished by the Moore & White people, according to the best of my knowledge and belief.

RDQ688. If the adjusting screw and the parts with which they co-operate, received from Moore & White, were in accordance with the scale of this drawing, what, if any, change would be required in those parts to give the Fourdrinier machine the travel that you say Mr. Thom required? A. According to the ordinary understanding of this print, that adjustment could not be obtained from mechanism shown on this print.

RDQ689. Why not? A. It is an outline drawing only. There is no detail shown on either elevation of the adjusting screw, which is one of the important factors; there is no detail shown of the construction of the bottom of the post or box holding the worm-gear and worm, as to whether any hole was in the bottom, allowing the adjusting screw to extend lower down.

RDQ690. What I want to get at, Mr. Ross, is there necessarily any discrepancy or conflict between what you say Mr. Thom required for that machine and what is shown in this blue print, so far as the blue print goes? A. Not as far as the blue print goes.

RDQ691. In other words, the parts may have been furnished to Mr. Thom as you state, and still have been furnished you under this blue print? A. And not shown in detail on this print.

RDQ692. That is what I want to know? A. Yes, sir.

RDQ693. There is no necessary conflict then between the blue print and the machine furnished Mr. Thom, of the Kimberly-Clark Company, with an eight-inch travel? A. No, sir.

RDQ694. To get an eight-inch travel with a construction such as appears here, so far as details do appear, what is necessary? What kind of a screw, and what kind of a socket? A. A longer screw would be necessary, with provision made for it to extend down through the bottom of the base of the stand that holds the work and worm-gear.

RDQ695. You say "longer screw." Longer than what? A. Longer than the room is provided for in this outline drawing, calling the dotted line the screw, although it may be the cored opening in the casting.

RDQ696. You understand that blue print from Moore & White is a blue print of this particular machine, of the particular parts furnished you, or is that a general blue print? A. This is a general blue print, and is marked up in ink with the figures for our special application to the Kimberly-Clark No. 2 machine.

RDQ697. Now, do you understand that the other drawings which you have here of the various machines are also of the

same general character, rather typical drawings? A. Yes, sir.

RDQ698. Not going into all the details? A. No, sir; these drawings are too small a scale to go into all the details of construction.

RDQ699. You spoke of additional adjustment of the table-rolls specified in some of the specifications, I think the King specifications. Will you refer to one of those specifications, and read the particular clause which you had in mind, explaining what that means? A. Under the heading of Table-rolls—Rails on King Paper Company, the contract dated November 25, 1901, it reads: "Table-roll rails to be adjustable at least one and one-half inch pitch, three-fourths inches above and three-fourths inches below level." Do you want me to read the whole clause?

RDQ700. If that is enough to explain, that will do. A. "The rails made of brass planed on all sides, secured to the main rails by heavy brackets; a lip on these brackets with set-screws in same, to support the rails when bolts are loosened for adjustment."

RDQ701. Now, what was the purpose of that adjustment? A. That was common construction, a little adjustment provided for in these brackets on the table-rolls. This was done before the general pitching of the wire took place, because the paper makers claimed that some of their pulp, on heavy-weight papers, worked better with the wire running up hill, and some of their pulp, on the lighter weight papers, worked better with the wire running down hill; and Mr. King wanted that left as it was, in spite of having the Fourdrinier end made adjustable with the new type adjustment.

RDQ702. This, then, was an additional adjustment to that provided by the screw device, for raising the Fourdrinier end? A. Yes, sir, it was separate from it, in addition to it.

RDQ703. And do I understand you could, in those machines where this structure was provided get whatever adjustment there was from the movement of the breast-roll end of the Fourdrinier, and this amount of adjustment in addition? A. Yes, sir.

RDQ704. You spoke of the machines of the Northern Paper Mill Company, at Green Bay, having a single or continuous rail; and I understand that those rails have the suction-boxes secured to them? A. Yes, sir.

RDQ705. And that any vertical adjustment of the forward end of these rails, causes the suction-boxes to move with the rails? A. Yes, sir.

RDQ706. Do I understand that it was common practice in

the earlier machines to have the rails continuous? A. It was with the short rails—short wires. In fact, we made one machine for the Fox River Paper Company, No. 2 machine, with 50-ft. wire, and the rails were continuous, all in one piece. The old machines had wires as short as 28 feet, 33 feet, 40 feet —were standard lengths for the old machines; and in nearly all cases on wires of that length, the rails were continuous.

RDQ707. In those machines, if there was any raising of the breast-roll end by blocking up that end of the machine, would the suction-boxes necessarily go with the rail? A. Yes, sir.

RDQ708. So, with that old type of machine, that is, the type with the continuous rails, if the breast-roll end was raised with blocks, the suction-boxes would be raised, and you would have continuous pitch from the breast-roll to the guide-roll? A. Yes, sir.

RDQ709. Then I understand that the machines of the Northern Paper Company at Green Bay had that same type of rail? A. Continuous rail, yes, sir.

RDQ710. And that machine had the means for adjusting, the screw device for adjusting, the breast-roll end? A. Yes, sir.

RDQ711. And when the breast-roll end was elevated, the suction-boxes moved with the rails, and you had continuous pitch from the breast-roll to the guide-roll? A. Yes, sir.

RDQ712. Have you any personal recollection, outside of what appears in the specifications and prints for the Green Bay machine, as to the amount of adjustment that could be secured on that machine by the screw device? A. I don't know just what it actually had. I know that Mr. Fogarty wanted very little up-pitch—up hill adjustment—as he proposed to run mostly light-weight papers, and wanted all the adjustment he could get down hill; to have the breast-roll elevated as much as he could get.

RDQ713. But you have no recollection at this time as to the amount either of the down hill adjustment or the up hill? A. Only in a general way, that the breast-roll was to be so it could be put about one inch below and about three inches above the level of the guide-roll.

RDQ714. You spoke of seeing the Kimberly-Clark machines at Kimberly in operation in the mill, soon after they started, I think. Do you recall how soon it was after those machines started up, you saw them? A. Why, it was reasonably soon after; I should say two or three weeks, possibly a month, after they first started up.

RDQ715. And your recollection is that the machines were

running flat at that time? A. Yes, sir.

RDQ716. Do you recall the character of the paper they were making? A. They were making an ordinary book paper; part of it was machine finished and part supercalendered, in an adjoining department. They were having some trouble in the new mill, so they weren't speeding up the machines. One trouble was that their constant speed line, the constant speed part of the two machines, was being driven with motors that received their current from water-wheels and a Diesel engine. The generator that supplied this current, was also supplying some supercalenders; and when the supers were thrown on or off, the regulation wasn't good, and caused a change in the speed of the constant line, so that it made their papers light-weight or heavy-weight and wet or dry. So they weren't speeding up until everything was properly adjusted.

RDQ717. Now, do you know how soon they did first run those machines at any pitch? A. No, I do not. The Kimberly-Clark Company were peculiar in that they didn't want outsiders to know exactly what was going on there. I always made it a point never to see too much, even around our own machines. Then, if I was asked by some of their competitors, why, I didn't know; I would save myself the embarrassment of dodging the question. They wouldn't allow photographs to be taken of certain parts of their machines, even though we built them.

RDQ718. Can you state whether those Kimberly-Clark machines, Nos. 1 and 2, as they were installed by you, in the spring of 1905, were capable of being adjusted with the parts then furnished, so as to have an elevation of the breast-roll end of the wire above the guide-roll end of six inches? A. Not from my personal knowledge. We simply assumed that they had what Mr. Thom required or he wouldn't have O. K.'d the contract, and we wouldn't have received our settlement.

RDQ719. But if they were erected in accordance with the plans furnished by you, the material furnished by you, would they be capable of that adjustment at that time? A. I assume that they would, but I don't know. I know Mr. Thom wanted that. I know he O. K.'d the machines, and I had no trouble in making a settlement with the company.

RDQ720. You know that the adjustment could have been obtained with those machines with the material you furnished for the adjustment? A. I don't know it personally, because I didn't set them up in the mill, and I didn't see them tried.

RDQ721. Let me put the question this way, with the parts you furnished, were they capable of being set up to give that adjustment? A. We assumed they were, but I don't know it.

RDQ722. What about it don't you know? A. Well, any part. I never saw the machines that I know of running with six-inch pitch. They may possibly have had that pitch when I was there, but I don't know it. I never measured them, and Mr. Thom had a machine shop there that he could have made some changes if he wanted, so that when our erecting man was there, any little points that weren't covered by what we furnished, he could supply and not report to us. We don't know that what we supplied, made just that arrangement or adjustment.

RDQ723. You do know that that arrangement or adjustment was required? A. It was the understanding with Mr. Thom as to what his machines must have.

RDQ724. Did you believe you furnished parts to give that adjustment? A. We believed so, yes.

RDQ725. In ordinary practice, how long will the wooden suction-box covers last? A. That varies greatly, from three or four months to nearly a year. It depends on the speed of the wire, the amount of suction carried, the amount of filler in the pulp, the amount of grind stone carried in the pulp. Such things as that. The coarseness of the wire; it also is affected by the stiffness of the box. If the suction-box itself sags a little, the covers have to be planed off at the ends, so they will be straight, and that helps to shorten the life of the cover.

RDQ726. They must be renewed once in a while? A. Yes, sir.

RDQ727. And you think a year would be considerable time? A. That is a very long time. I am surprised when I hear of one that lasts a year, because we make a great many new ones constantly for our customers, sending them out in bunches of six and twelve to their stock rooms to have them on hand when they need them.

RDQ728. I would like to direct your attention to this question of the necessity of adjusting the suction-boxes when the breast-roll end of the wire is raised, and will you explain a little more in detail the relation there is between the wire and the top of the suction-boxes, and why it is necessary or advisable to raise them, and under what condition—why it is advisable to raise the suction-boxes and under what condition? A. That is, you mean if you elevate the breast-roll, how much can you elevate the breast-roll before you begin to have trouble with the suction-boxes?

RDQ729. Explain what the relation is and why it is necessary to adjust the suction-boxes, and under what condition? A. By having the broken rail or rail in two sections, you ele-

vate the breast-roll—you elevate the wire to the end of the first section of the rail; then you have to elevate the section of wire from the end of the first section of rail to the top of the guide-roll. Now, unless the weight of the wire with the weight of the pulp on the wire would cause that wire to sag enough to make a good contact on the level top of the suction-boxes, the air will get below the wire into the suction-boxes and break the suction, as they call it, i. e., will give the pulp air enough for its capacity, and not make suction through the pulp. And the machine tender will take a hose and fill up that first box with water, because the pulp will not have the capacity to handle the amount of water that it does of air, and will make a little seal there and gradually work that section down, so the wire will hug the box for them to get it started, and work all right as long as the paper is kept on there. That is simply in starting up their machine with the elevated breast-roll and the flat suction-boxes that they will have trouble with flat suction-box section. It seems to work all right after that.

RDQ730. And with what adjustment of the breast-roll would it work with the flat suction-boxes? A. As far as I have been able to find out, four inches elevation of the breast-roll with the suction-boxes stationary begins to give us trouble when they were starting up.

RDQ731. Below that, it will work all right? A. Below that it seemed to work all right, yes, sir.

RDQ732. Now, with continuous rail construction, as you had in the Northern mill, at Green Bay, there would not be any trouble of that kind, no matter how much the adjustment was? A. No, sir.

RDQ733. You said that with machines like the Kimberly machines furnished by you, the best way to overcome this objection would be to put a blocking under the forward end of the suction-box supports. You mean by that the column or posts? A. The cast-iron post that holds the end of the suction-box rail and the end of the adjusting rail.

RDQ734. If a blocking of some kind is put under that post, there, so as to raise the post, that would be accomplished? A. That would raise the suction-boxes.

RDQ735. You think that would be the best way of accomplishing it? A. I don't know as that is any better than putting a block or plate on top of the post, between the rail and the post. It would have the same effect there, only the bolts going through the top rails are a little more expensive to get than the bolts going through the foot on the base plate; so that in ordinary practice, they would not raise that iron post. But I

have seen the rails raised, but not very often.

RDQ736. And do I understand you can raise that iron post without any change in the construction of the machine? A. Very little. The suction-box connections to the suction pump pipe are flexible. They might have to change the length of the hose—some little minor change, but nothing that would involve expense or much delay.

RDQ737. There wouldn't be any change in the machine itself? A. No, sir.

RDQ738. I wish you would explain a little more in detail the circumstances about the ordering of the Rhinelander machines, and change in the type of one of the machines? A. That is rather ancient history. Do you want me to start at the beginning?

RDQ739. Let's have a clear understanding of that. A. At that time, Mr. C. B. Pride was the leading architect in paper mill construction at Appleton, Wisconsin, and I received a message from him one day to meet him here in Chicago to talk about paper machinery. I came down and he introduced me to Mr. Brown, from Rhinelander, Wisconsin, who, he said, had the "paper bug," and he wanted me to help to satisfy his longing. We talked over details, and Mr. Brown made the remark, "I know nothing about a paper mill; I am a lumberman. I want a mill that will make the same kinds of paper as are being made on your two machines at Brokaw, Wisconsin, where Mr. Edmonds is. Can you build them for us?" I told him, "Yes," "Can you make us certain deliveries?" "Yes, if you will place your contract at once, as we have other contracts in view, and are constantly receiving letters at this time of the year about machines for the season's business," I said. He says, "We haven't yet received our incorporation papers from Madison, as we only filed them a day or two ago, but just as soon as we are incorporated, we want you at Rhinelander to close this up, so I wish you would go home and write out specifications covering two machines, the same as you built for the Brokaw mill, with the addition of any improvements that have been made since those machines were built, as we want the latest type of machines there are. Now will you protect us on this delivery until we get our charter from Madison?" I told him I couldn't agree to this, but would agree to let him know at once if anyone else was ready to close up. I went back to Beloit, and a few days after that, I received another telegram from Mr. Pride asking me to come to Rhinelander at once and close up the machine contract. I went up there the first part of May, and they hadn't received their charter, although they

were expecting it every mail.

When it came, the details were gone over in a general way; the contract was signed by Mr. Brown, as president, and another gentleman as treasurer or secretary, a check was given me to bind the bargain, and then I said, "Gentlemen, you haven't even your manager hired yet, *let alone* your superintendent, and we never yet have built a machine just like some other machine that suited the man in any other mill that is going to operate that machine. Now, I will put an agreement here on this proposition that you are to have the privilege of making any changes you desire on these specifications, within thirty days from date, the price on these changes to be adjusted at the time the changes are made." I explained some other details I thought was rather necessary for both of us, and he approved of it, and I went home.

Afterwards, they hired Mr. Edmonds as general manager, Mr. E. A. Edmonds—I am not sure about his middle initial—he is in San Diego, California, now—and the thirty days had expired before I received notice to come up and go over this with Mr. Edmonds,—the changes that he wanted. He explained fully that owing to Mr. Brown's lack of knowledge of paper mills and paper mill conditions, they had signed a contract for two machines that would not be money makers, as the fiber and wrapping paper trade was overdone, and that he wished he had two print machines, instead of two fiber and manilas, but that he didn't have water-power enough to prepare ground wood for two print machines, but would change one machine to a print machine, and specifications in detail were drawn up, submitted to Mr. Edwards, signed by him as general manager of the Rhinelander Paper Company, for one machine to be a print machine and some wider than the original contract machine, and one machine to be a fiber and manila machine, as originally drawn up, with a few minor changes, by Mr. Edmonds; and these two new contracts were signed, referring back, as Exhibits A and B, to the original contracts, signed by the president and secretary of the company.

Later on, they hired as superintendent a man from the east, and I was called into consultation again about some of the details on the print machine; and this superintendent didn't claim to know much about fiber or manila machines. Very few changes were made there, and only a few changes in the details, to suit his ideas on the No. 1 machine. Among other changes on the No. 1 was that he wouldn't care to have the wire run up hill on the Fourdrinier end on No. 1 machine, but he would like all the pitch he could get and not increase the cost

any. So notes were made of these minor changes, and to the best of my knowledge and belief, the machines were satisfactory, as they were promptly paid for, and have been record breakers ever since.

RDQ740. Now, according to your recollection, what pitch was provided for on that No. 1 machine? A. To the best of my recollection, it had a total pitch of five inches.

RDQ741. How was that divided? A. All above the level.

RDQ742. That machine was designed first for making print? A. Originally No. 1 was designed for making fiber and wrapping.

RDQ743. After the second contract? A. After the second contract, it was designed for print exclusively.

RDQ744. Under those circumstances, there would be no occasion to give it a little up pitch? A. No, sir.

RDQ745. And you think if Mr. Larson testified that it had two inches above and two inches below, he was mistaken? A. There is a chance for a mistake, because preliminary drawings were made for both machines, and 30 or 40 days had elapsed, because the architect was after us for foundation plans, so as to plan his buildings, and general preliminary drawings were made; there is a chance for misunderstanding there. There is a chance that the erector in the mill received different instructions from the understanding with the superintendent and myself at the time the specifications were gone over; there is a chance that the machines didn't have the five-inch pitch, because I never measured it after it was erected in the mill. I didn't try it in the shop, to see whether it had that whole travel. We assumed that the instructions received were being followed out.

RDQ746. And those instructions were for five-inch pitch? A. Yes, sir, to get the whole travel for elevation, and not for any depression.

RDQ747. As far as you know, there wasn't any change from it? A. No, sir.

RDQ748. You spoke, in connection with those drawings for the Northern machine, and I think also of the Rhinelander, of their being limited in their upward movement by the cross-bars above the guides or side-rails? A. Yes, sir.

RDQ749. What was the practice with reference to those guides, where you didn't want a limit of this kind; was there any instance where that was done? A. We had a longer pattern that we used at the screw end, and they could also block up the feet of the guide in the mill, putting longer bolts through the blocking into the base plate, and also block up the screw stand.

RDQ750. Do you know what was actually done in that respect, with reference to the Northern mill and Rhinelander mill? A. No, sir, I don't.

RDQ751. The fact that these drawings show these guides in position to limit the movement of the rails, would that determine the fact that they had such a limit installed? A. No, sir, it was a general drawing. They are copied one from the other, and any details would not show on a small scale drawing of that kind.

RDQ752. You were asked about the increase in speed from 500 to 600 feet per minute on print machines. Do you attribute that increase entirely to the practice of giving the making-wire a high pitch? A. No, sir, the gradual improvement in speed would have continued, I have no doubt at all. It was being continued then. Without a doubt, additional pitch helped solve some of the problems they might have had to work longer on; but with the growing demand for speed, and the better training of the men around the mills, that they were getting, the improved machinery for producing results, I feel sure they would have reached 600 without the pitch.

RDQ753. What pitch do you think is required in print machines to give a speed of 600 or 625 feet? A. I am not a paper maker enough to say that, but I have seen 615 feet run on a pitch of 16 inches. Whether that is the best pitch or not, I don't know.

RDQ754. You don't know it could be run on a less pitch? A. I never have seen 615 feet on a less pitch; I have heard it was, but I don't know it.

RDQ755. You are not prepared to say, do you know whether it could be run on six-inch pitch. You wouldn't say it couldn't be? A. Oh, no, because I have seen samples of paper that I was told were run at six-inch pitch 600 feet; but I didn't see it done.

RDQ756. Now, do those machines at the Kimberly mill—you are familiar with the construction of those machines, and so I refer to those—and assuming that those machines are given six-inch pitch, and that the power device is sufficient so as to run the machines at 625 feet per minute, do you know any reason why those machines could not be run at that speed to make print paper? A. Why, there would be details of construction to attend to. The table-rolls would have to have running balance where they now have standing balance; as a standing balance at that speed isn't a running balance, and any vibration of the table-roll hurts the formation.

That is one thing that has been found out, even in connection

with the pitched wire. The table-rolls have to have the running balance and perhaps a little better wearing capacity in the bearings would have to be provided at the additional speed than is provided there. Perhaps steel rimmed pulleys would have to be used in some places, in place of the cast-iron, on account of high travel. But the principle of the machine would not be affected, however. It would be details of construction. The men would have to be educated to handle the paper at that speed. When they have been changing their speeds, we have found that a man that was used to 300 feet speed, couldn't handle the paper at 400 feet or he was the exceptional man that could. The common practice has been to increase the speed 20 or 25 feet at a time; let the men get used to that speed, and then speed it up some more.

Of late years, the men are trained so that we have no trouble in starting up a machine at 450 feet, and gradually working it up to 500 or 600, that might be required. The last machine we started up for Hawley, our erecting man reported, they had men on there that were used to 250 feet on an old machine, and they had trouble in handling the paper at the 400 feet that they were running; but in a few days they overcame that.

It is those little things around the paper mill, that make or break the management.

RDQ757. Well, have you been able, in your examination of these machines, to discover any difference between the principle of the operation of a machine running say 300 or 400 feet per minute and with five or six inch pitch, and a machine running 600 or 625 feet per minute, having 16-inch pitch? A. It is the same machine increased in speed. I saw this Rhinelander No. 1 machine when it was running practically level at 400 feet. I saw the same machine when it was running with a 16-inch pitch at a little over 600 feet a minute, and the only changes I could find on the machine was a larger fan pump for handling returned water, and a larger stuff-pump for handling more pulp, so as to make more paper at the increased speed; and a little more screen capacity. The balance of the machine was practically as constructed in the first place by us.

We are on record in writing to the Rhinelander Paper Company protesting against the speed at which some of the pulleys are traveling today, because they are cast-iron pulleys made for 500 feet of speed on the machine, and they have been running them at excess rim speed for cast-iron pulleys. That is simply a detail of construction, and not a change of the principle.

RDQ758. With a machine that has a four or five inch pitch,

is there a gravity feed of the stock that passes down over the wire? A. The head-vat is dammed back by the slice or regulating board some of them used to use, but some are doing away with that and using slices entirely, and the height of the pond back of the slice helps to get the stock to travel of the wire, which produces results which the pitched wire is doing.

RDQ759. That wasn't the question I had in mind. I want to know if you have four-inch pitch or 5-inch pitch or 6-inch, whether you have gravity action on that stock? A. Yes, it is trying to run down hill.

RDQ760. And that accelerates the speed of the stock, does it not; gravity increases the flow of the stock? Doesn't it?

Mr. Lyman: Objected to as leading.

RDQ761. I will withdraw that question, and put it this way: I want to know whether with a four or five inch pitch, the stock flowing down over that would get any effect from gravity? A. Certainly; the water tries to seek its own level.

RDQ762. Do you know whether Hawley ever used the high pitches you say his machines were capable of having? A. The last information we had from there, he hadn't adjusted the new machine to any pitch. The papers he had orders for could be made on a flat wire.

RE-CROSS EXAMINATION.

By Mr. Lyman:

RXQ763. Mr. Ross, I suppose when you talk about papers made 6-inch pitch 600 feet, you were talking about Minnesota & Ontario? A. Yes, sir.

RXQ764. You also spoke of a paper you had seen made 16-inch pitch and 625 feet speed. Was that also Minnesota & Ontario paper? A. No, I saw that at Rhinelander. I hadn't seen the Minnesota & Ontario machine. I just saw samples of the paper that was reported to have run at six-inch pitch.

By consent of counsel, signature waived.

STATE OF ILLINOIS,
ss.
County of Cook.

I, Robert Dobberman, a notary public within and for the state of Illinois, do hereby certify that the foregoing deposition of Nobel J. Ross, was taken on behalf of the defendant, said deposition having been taken by consent of the parties, and without notice, notice having been waived, before me at the office of Rector, Hibben, Davis & Macauley, 1956 McCormick Building,

Chicago, Illinois, on the 31st day of May, and the 1st day of June, 1917; that the witness was by me first duly sworn before the commencement of his testimony; that the testimony was taken in shorthand by Frank H. Ford and afterwards written out by him in typewriting; that the opposing party was represented by its counsel, Mr. Harrison F. Lyman during the taking of said testimony; that the said testimony was taken at Chicago, in the county of Cook and state of Illinois, and was commenced at ten o'clock a. m. on the 31st day of May, 1917, and was continued pursuant to adjournment on the 31st day of May and 1st day of June, 1917, and was concluded on the 1st day of June, 1917; that the signing of the deposition was waived by consent of counsel; that I am not connected by blood or marriage with either of said parties, nor interested directly or indirectly in the matter in controversy.

In testimony whereof, I have hereunto set my hand and affixed my seal of office at Chicago, Illinois, this 23d day of August, 1917.

ROBERT DOBBERMAN,
Notary Public,
Cook County, Illinois.

(Seal)

My commission expires June 1, 1918.

DISTRICT COURT OF THE UNITED STATES,
DISTRICT OF MAINE.

EIBEL PROCESS COMPANY,
Plaintiff,
vs.
MINNESOTA & ONTARIO POWER COMPANY,
Defendant.

In Equity No. 769.

Deposition taken on behalf of the defendant in the above entitled cause, before me, Grace A. Southwell, a notary public, beginning on Monday, November 12, 1917, at 12 o'clock noon, at Room 855 McCormick Building, Chicago, Illinois, pursuant to notice and agreement of counsel.

Appearances: On behalf of plaintiff, Harrison F. Lyman,

Esq., and on behalf of defendant, A. C. Paul, Esq.

And thereupon the following proceedings were had:

NOBLE J. ROSS,

a witness produced on behalf of the defendant, being first duly sworn, deposes and says as follows, in response to questions:

By Mr. Paul:

Q1. You are the Noble J. Ross who heretofore testified as a witness on behalf of the defendant in this cause? A. Yes, sir.

Q2. I note in the transcript of your testimony heretofore given your first name is spelled "Nobel." What is the correct spelling of your first name? A. Noble.

Q3. When you were on the stand before, Mr. Ross, you testified about seeing a blocked-up machine at the mill at Fort Edwards, N. Y., in July, 1898. Have you any correction to make in reference to this matter? A. Yes. I went through so many mills of that type that I got this mill mixed with the Palmer Falls mill, and it was at the Palmer Falls mill, which is near Corinth, N. Y., that I saw the blocks under the forward end of the machine at the breast roll and under the post by the suction boxes.

Q4. So far as your testimony is concerned relating to the structure and arrangement that you then saw, the testimony was correct, was it? A. It was as I testified before, yes, sir.

Q5. The change you wished to make was as to the mill at which you saw it? A. The mill at which I saw it.

Q6. It should have been the Palmer Falls mill instead of the one at Fort Edwards? A. Yes, sir.

Q7. What about the names of the people there? You spoke of seeing a Mr. Argy and Mr. Chahoon? A. Why, I had a letter of introduction to Mr. Argy, Sr., at the Palmer Falls mill, and saw him down town where he was training the Episcopal choir, and he gave me a letter to one of the office people, and in that way I got into the mill; but I am not sure whether I saw Mr. Chahoon at the Palmer Falls mill or at Glen Falls mill, as I was in both mills the same day.

Q8. You are not sure that you had any conversation with Mr. Chahoon at this Palmer Falls mill? A. No, sir.

Q9. You said on direct examination when you were on the stand before, that you asked the machine boss, who was showing you around, what the blocks were for and he said they were to lift the breast-roll more, and then you gave Mr. Chahoon's name as that of the machine boss. What correction or change would you make in this testimony? A. That the ma-

chine boss might not have been Mr. Chahoon. I am not sure as to that. It is so many years ago.

Q10. The conversation occurred substantially as you have given it with the man who was machine boss? A. Yes, sir.

Q11. But you are not sure that it was Mr. Chahoon? A. No, sir. I am not today.

Q12. How high a slice has been employed in machines constructed by you for some years past as a standard? A. About eight inches, as a standard for a number of years. Our latest pattern is nine inches. Before we used the eight inch pattern we had a narrower slice with the slot in the middle, and as they increased their heights, the millwrights would put pieces of wood in the slot where the bolts were that held the two parts of the slice together. Then every time they had to change the width of paper on the machine they would have to cut off these pieces of wood or put in shorter pieces, as the case might be. So that we designed and built a slice eight inches deep without any center slot, and this was the first slice of this type on the market at that time, to the best of my knowledge and belief.

Q13. How early did you adopt the eight inch slice? A. About 1896, on the Port Edwards machine, Port Edwards, Wis., I think were the first machines to have that depth of slice on. Possibly the Bryant Paper Co. machine of Kalamazoo, Mich., had this same depth on, but I am not sure now.

Q14. And this Bryant machine was built six or eight months before the Port Edwards machine? A. Yes.

Q15. Have you since you adopted the eight inch slice in 1896, ever used a lower or narrower slice than eight inches? A. Not unless it would be some repair job on some old machine to replace the old narrow slices.

Q16. Eight inch slice has been your standard slice since 1896? A. Until we got to the nine inch slice.

Q17. And about when did you begin to use the nine inch slice? A. I think five or six years ago was the first nine inch slice that we made.

Q18. Do you remember for what machine? A. I don't remember now the machine that we made that pattern for.

Q19. Of the eight inch slice, what amount of head could you get in the pond? A. Very near eight inches—practically eight inches, because the bottom of the slice did not touch the wire and the top of the pond was kept about seven-eighths of an inch below the top of the slice on their high speed machines.

Q20. About how high would the bottom of the slice usually be from the wire on the high speed? A. The first slice about one inch or seven-eighths of an inch. That was when they

were using two slices. On the recent high speed machines only one slice has been used and they may run it a little closer to the wire than that, but not so very much.

Q21. When the two slices were used, how far apart would they ordinarily be placed? A. Between five and six inches.

Q22. Will you refer to the blueprint, Exhibit "R3", which is the drawing produced in connection with your former testimony, of one of the King machines, and mark the two slices with the words first and second slice, if they appear in this drawing? A. Yes, sir. (Witness marks the blueprint, as requested.)

Q23. This drawing, Exhibit R3, does not show any sides for the pond. What were usually employed for that purpose? A. We always used a brass strip that is fastened to the front of the head vat and then extends from the head vat down to the end of the deckle rail to which it is clamped across to the first slice.

Q24. And about what height strip was employed for that purpose? A. On this drawing it would be not over seven inches, and this machine was for making book papers.

Q25. Then, on this machine drawing, Exhibit R3, what would be the height of the pond that you could obtain? A. Not over seven inches in depth, without making wider side pieces and building up the top of the head vat.

Q26. And what would be necessary with these machines to make any variation in the depth of the pond? A. The overload on the head vat is adjusted to the depth of the pond so that if the pond goes to increasing any the overflow is generally discharged back to the frame pump box and the machine tender has to regulate his fresh water supply so as to maintain that level to that overflow height in order to get the results they are after in the formation of the sheet.

Q27. As I understand you, the depth of the pond would be regulated by the height of the slice and the width of the side pieces? A. That would be the limit of the height.

Q28. And you could make the head any depth you want within that limit? A. Yes, sir.

Q29. When you were on the stand before you spoke of adjusting the suction boxes on the machines having what you designated as fixed rails to which the suction boxes were connected. To make your testimony a little more clear upon that point, I would like to have you produce a sketch illustrating this arrangement. Have you such a sketch here? A. Yes, sir.

Q30. Was this made by yourself? A. Yes, sir. I just made it a few moments ago.

Q31. Are there two sketches upon this sheet? A. Yes, sir.

Q32. What does the lower sketch show? A. It represents a machine with a continuous top rail the same as we build for the Northern Paper mills machine that has been referred to before.

Q33. You have now marked these two sketches Figure 1 and Figure 2, have you? A. Yes, sir.

Q34. Will you refer to the sketch, Figure 1, and explain what is shown by this sketch, and the way in which the suction boxes can be adjusted with this construction? A. Figure 1 represents the long section of rail as being pitched down to the post by the suction boxes and also represents a post. Of course this sketch does not show the details of attachment of the rails to the post, and on this same post we have the level or fixed rail that extends over the suction boxes and show two suction boxes below this rail with maple covers about one and three-quarters inches thick extending below the rail, even with or outside of the rail. Then below the boxes I show some tapered wood shims that I have seen used on machines where three-quarters of an inch of pitch was employed,—that is, the breast-roll elevated three or four inches above the guide roll and they would cut off the maple suction box cover inside of this level rail and raise the first two or three boxes by inserting tapered wood shims between the top of the box and the bottom of the level rail. They would also change the position of one or two of the table rolls on the pitched rail so as to help make a more gradual change in the pitch of the wire at this point as it came from the pitched section to the fixed section of the rails.

Q35. What would be the effect of this adjustment of the suction boxes and the change in the position of the table rolls? A. It would help to do away with the trouble of having this break in the pitch of the wire making trouble with their suction pump when starting up the machine, as the wire would have a better chance to fit the top of the suction box covers which could be elevated above their old level by this means.

Q36. When you spoke of changing the table rolls, which way would those be moved, up or down? A. They would be moved up a little.

Q37. You have indicated some of the table rolls in this sketch? A. Yes, sir.

Q38. How many have you shown here? A. Three.

Q39. Now, you say you have seen a machine with the suction boxes adjusted in that way? A. Yes, sir. That was quite common for a few years when they were beginning on this low pitch, when they were trying to get more pitch on the wire and

trying to get away from the trouble of breaking the suction on the box by having a level section of boxes.

Q40. Can you specify any particular mill in which you have ever seen an adjustment of that kind? A. I do not remember now, because that was a great many years ago and was done in the mill by the millwrights.

Q41. How early did you ever see an adjustment of that kind? A. It was two or three years before we built the machine for the Northern Paper mills at Green Bay.

Q42. And the date of that was fixed by your former testimony and the specification and drawings? A. Yes, sir.

Q43. What was the amount of pitch on the wire that was employed in the machines that you saw having this arrangement? A. Not over three or four inches.

Q44. What have you shown on the second sketch on this sheet? A. The second sketch, Figure 2, I show the continuous one-piece rail supporting the table rolls and suction boxes on the same rail.

Q45. That is the construction used on the Green Bay? A. That is the construction we employed on the Northern Paper mills machine at Green Bay, where Mr. Fogarty is manager.

Q46. And that machine, you have testified, had an adjustment for the breast roll? A. Yes. It had.

Q47. That is covered by your former testimony and the drawing of that is in evidence? A. I believe so; that is my recollection.

Q48. Will you make a separate sketch, marking it Figure 3, on this same sheet showing the position of the parts when the suction box cover was cut off, as you have described, and the box was adjusted by use of the shims? A. Yes, sir.

Q49. Have you made such detail as I have requested? A. Yes, sir.

Q50. And will you explain what it shows? A. The sketch shows a short section of the level or stationary rail of the suction boxes with one box raised into position that it would have if the maple cover was cut off inside of the rail and the shim inserted between the top of the metal box and the bottom of the stationary rail. This allows the top of the maple cover to be elevated inside of the rail so as to help meet the wire when it is pitched.

Q51. By what means are these suction boxes held to the metal rail in the construction you have illustrated in this sketch? A. In the old machines there was a section of iron rail below the suction boxes, through which brass screws extended up to the bottom of the support of the brass suction

boxes with nuts on top of the stationary rail to hold the box to the bottom of the rail.

Q52. Have you indicated either fastening device on the sketch, Figure 3? A. Just an outline. Yes, sir.

Q53. What have you indicated there? A. The old iron frame below the boxes through which the brass screws were extended to hold the suction box to the bottom of the wrought rail.

Q54. Was that the kind of device that was employed where these suction boxes were used on the old machines? A. Yes, sir. They were used this way.

By Mr. Paul: The sketch produced by the witness is offered in evidence and the notary is requested to mark the same "Defendant's Exhibit R7."

Direct examination closed.

CROSS EXAMINATION.

By Mr. Lyman:

XQ55. How much of a breast roll elevation could be taken care of by this shim arrangement that you speak of? A. I never saw over three or four inches.

XQ56. And for higher elevations like that some other method of suction box adjustment would have to be used? A. Yes, sir.

XQ57. In the machines of which you speak in which the slice is now made nine inches high, how much of a pond do the paper makers carry? A. Not much over eight inches.

XQ58. Are any of the Beloit machines in use in which there is a greater head than eight inches used? A. We have one at Oregon City that we built for the Hawley Pulp and Paper Co. They had slices ten inches deep there; they could use about a nine inch pond, but I do not know whether they have or not. I have never seen it making paper.

XQ59. That's the only one that you know of? A. That's the only one I know of. Of course it would be possible for them to cobble up things in the mill, but I do not know that they did.

XQ60. Ought not your shims on this sketch to be tapering in the opposite direction? A. Well, whichever the level rail called for. The top of the box would want to be raised on the first edge so that the thin edge of the shim should be towards the breast roll.

XQ61. You said that this construction was sometimes used when they were trying to put in low pitches at the breast roll? A. Well, when they were using up to four inch pitch, as I testified before, they would begin to have trouble in starting up the paper on the machine at the first suction box because the wire was trying to take the straight line and would not always hug

that first box.

XQ62. Was it necessary to put these shims in where they had a three inch elevation of the breast roll? A. Only where they had light weight papers—there they would probably do it and heavy weight paper would always load the wire down enough to make it sag and hug the box tight enough on about a three inch pitch. Now, I have been told,—I don't know that,—that they would use this arrangement on a six inch pitch, but I never saw it.

XQ63. You would call a six inch pitch a high pitch, would you? A. For that kind of an arrangement, yes, sir.

XQ64. But I mean in general? A. I know we have made them twenty-four inches pitch.

XQ65. You spoke in your testimony about the machines which you originally thought were at Fort Edwards, but which you now say were at Palmer Falls, as being Numbers 1 and 2, if I remember correctly? A. Yes, sir.

XQ66. Do you know whether that was an error or were they actually numbered 1 and 2? A. That is my recollection; that No. 1 machine was the narrower machine of the two and No. 2 was the wide one.

XQ67. And was it No. 1 that was pitched or No. 2? A. No. 1 it may have been pitched, but I do not remember about that. I do remember that No. 2 was pitched.

XQ68. And what was the paper speed of No. 2? A. About 480 feet on No. 2. I will say here, in regard to starting in at the calender end of the machines. What I have called the No. 1 machine is on the right hand side when you would be going towards the screens, and what I would call the No. 2 machine would be on the left-hand side when we would be going towards the screens; and that is my recollection of the No. 2 at the time I was in the mill; but it is possible I may be mistaken, it is so many years ago.

XQ69. The No. 2, which was the pitched machine, was that originally the No. 1? A. That is my recollection, yes.

XQ70. What was the width of the No. 2? A. As I remember No. 2 they called it 147 inch machine.

XQ71. How much would that trim? A. About one hundred and thirty-five inches.

XQ72. And what would be the product per day on that machine, running at 480 feet? A. I do not know, I am sure.

XQ73. Can you figure it out? A. No. I do not know their paper tables. It would depend on the weight of paper they were making at that speed, and my recollection is that they were making a little heavier paper on this No. 2 than they were

on the No. 1, and this was part of the reason of the difference in their speeds.

XQ74. Well, how heavy was the paper they were making on the No. 2? A. I don't know. It was what they call print paper, but print paper varies *from what they call 26* pound to 34 pound.

XQ75. Well, can't you calculate how much the production would be at 26 pounds and how much at 34 pounds? A. If I had the paper makers tables here I could, but I don't carry those figures in my head because I don't use them very often.

XQ76. Can you calculate them yourself? A. No, sir. I never load up my head with those list figures, especially where I do not use them twice a year.

XQ77. How would you go to work to find out from the paper makers' table what would be the product of that machine? A. Well, they have them all figured out; on some tables the weight of paper, the speed at which it is run; that will give the production. You have to take the number of square feet produced and divide it by the number of square feet necessary to weigh—500 pounds or 480 pounds, whichever way the paper is sold.

XQ78. Well, the weight of that paper was 34 pounds, wasn't it, to 500 sheets of 24 feet by 36 feet? A. That would be all guess work at this time. It is too far off for me. I was interested more in the construction and operation of the machines than I was in the production.

XQ79. You were probably confusing Mr. Chahoon with someone else when you mentioned his name in connection with those works? A. I had seen Mr. Chahoon that day. I can't saw now which mill he was in.

XQ80. Did you see Argy at this Palmer Falls mill—John Argy? A. I saw Mr. Argy, Sr. I don't know his first name. Mr. Parks of Glen Falls gave me a letter of introduction to Mr. Argy at Palmer Falls mill.

XQ81. How did you happen to discover the mistake in your previous testimony on this point? A. I was talking with our sales manager, Mr. Macklen, who was in the employ of the Pusey and Jones Co. 12 or 13 years, and we mentioned Mr. Chahoon's name as being one of the progressive men who had been successful in securing the management of one of the large Canadian mills, and I made the remark that I thought the only time I had ever seen him was at Fort Edwards, and mentioned about the time, and he said that in his recollection Mr. Chahoon at that time was either at Palmer Falls or Glens Falls; and as I had been in both mills the same day I was not sure myself

which mill I saw him in.

XQ82. So that was all that led you to make this correction in your testimony? A. Yes, sir.

XQ83. When you testified before you were not certain whether the machine at Brainerd, Minn., was operating with a pitched wire or not. Have you since ascertained about that? A. No. I have not. I have intended to go there, but I haven't gone there. I do not know whether their wire is pitched or not.

XQ84. Have you seen the Kimberly Clark machines since your previous testimony? A. No, sir.

XQ85. Have you seen the Rhinelander machines since your previous testimony? A. Yes, sir.

XQ86. Have you anything further to say as to the amount of adjustment that there was in those two machines at the time they were originally installed? A. No, sir.

XQ87. Are you sure that No. 2 machine that you testified about had a width of 147 inches? A. Only what they told me. I did not measure either machine.

XQ88. Are you sure it was not a 90 inch machine? A. No, sir, I am not—only that one machine was called a 96 inch and the other was 147 inch machine. To the best of my recollection those were the figures given me at that time.

XQ89. The narrower machine was going faster than the wider machine? A. That is my recollection. Yes, sir.

XQ90. Do you know whether those two machines were put in at the same time? A. No, I do not. They were built by the Pusey & Jones Co., so I am not posted as to how close together they were installed.

XQ91. The machine which you called the No. 2 was the one that had the blocking arrangement, and that was going at 480 feet a minute? A. That is my recollection. Yes, sir.

XQ92. And the machines which, according to your recollection, had no blocking was a 96 inch and was running at about 500 feet? A. Yes, sir. That is my recollection of it.

By the Witness: By the No. 1 machine I mean that when starting at the calender end and walking towards the screens between the two machines, the No. 1 machine would be on the right-hand side and the No. 2 machine on the left-hand side, to the best of my recollection.

XQ93. Where did you put in that 24 inch pitch that you spoke about? A. The Hawley Pulp and Paper mill, Oregon City.

XQ94. In these instances, where the shims were put in on account of a change of three or four inches in the position of the breast roll, did that change consist in raising the breast roll

from a position below the level to a position above the level? A. From a level position to above level.

XQ95. What is the average weight of news print paper? A. Thirty-one pounds is considered standard, I believe, now.

XQ96. When did you put in this twenty-four inch pitch Hawley machine? A. It was started up last May.

XQ97. Did I understand you to say that the two slice system was put in originally for high speed machines? A. No, sir. It was always used on all papers until they got up to high speed; then the second slice was taken off.

XQ98. Can't you get hold of a paper table right here, so that you can answer that question of mine? A. I don't know of any one.

XQ99. There must be someone in Chicago? A. Yes, but I am not acquainted with the dealers, because I do not sell them machinery.

XQ100. Figuring the production of this machine at 480 feet per minute, trimming 135 inches, running 23 hours a day, and making paper of standard weight, that is, 31 pounds, for 500 sheets of 24 inch by 36 inch, I figure that the production per day would be about 38½ tons. Is that correct? A. That is the way it figures, yes, sir.

XQ101. The 23 hours a day I take, because you suggested that as being about the fair time; that is, an hour out on account of shut downs, probably? A. Yes, sir. That is what they figure around the mills.

XQ102. In at least one of your contracts with your customers, I think you stated in your previous testimony that you undertook to protect them from patent suits on account of their use of your machines. I should like to know whether a clause like that is usually in your contracts with your customers? A. Never have had it except in that one case.

XQ103. That was the Kimberly-Clark? A. Yes, sir.

XQ104. How much would that 96 inch machine trim? A. About 85 inches, safely.

XQ105. And the way to find out what the production in tonnage per day of that machine was would have been to multiply the width of the sheet as it trims by the speed per minute; multiply that by 60 minutes to an hour and 23 hours to a day, and divide by six square feet,—that being the size of one sheet of paper, 500 of which of standard weight make 31 pounds; multiply by 31 pounds and divide by 2,000 lbs. to a ton. Is that correct? A. That is about the way you figured the product of the other machines, except that you multiplied your six square feet by your 500 and used the 5,000 to divide with.

XQ106. Yes. That is the proper correction? A. Yes, sir.

XQ106. Do you consider it to the interest of the Beloit Co. to have the Eibel patent declared invalid? A. No. I do not know as we do consider it that way. I have been frank to tell some of the paper makers that I did not know whether it was Alpine or Eibel that was entitled to the credit for this, but that some one ought to have a little pay on the side for having nerve enough to try it.

Cross examination closed.

RE-DIRECT EXAMINATION.

By Mr. Paul:

RDQ107. Your company has no interest in the defense of this suit? A. Not that I know of.

RDQ108. You have been just as frank to say anything that you thought was favorable to the side of the plaintiff as you have to the side of the defense, in whose behalf you have been called as a witness? A. I think my last answer shows that.

RDQ109. You have been on friendly terms with Mr. Eibel? A. Oh, yes.

RDQ110. Did Mr. Eibel call you up by telephone before you testified here in Chicago before? A. I met him either on the street or in the hotel and he asked me if I was going to testify on this. I told him I was.

RDQ111. When was that? Just before you testified the other time? A. Either that day or the day before, yes, sir.

RDQ112. When you were at Rhinelander and saw these machines, since you have testified in the case, were they in operation? A. The No. 1 machine was not running. The other three were.

RDQ113. Well, of the two original machines that were put in 1904 or 1905, whatever the date was, were those in operation? A. Only the No. 2 machine.

RDQ114. What pitch was it running? A. They were running three or four inch pitch.

RDQ115. What pitch was the No. 1 machine set for? A. About three inches. I did not measure, but I just judged that from the looks of it.

RDQ116. Those were the two original machines? A. Yes, sir.

RDQ117. When was it you saw them? A. It was in October sometime.

RDQ118. October, 1917? A. October, 1917.

RDQ119. When you were on the stand before I think you mentioned that Mr. Argy, Sr., was John Argy. Did you know whether that was his name? A. I am not sure that was his

name. It was Mr. Argy, Sr., that my letter of introduction was to.

RDQ120. Do you know whether the Hawley machine which you say was built that had a 24 inch pitch, do you know whether that has ever been run? A. We wrote to Mr. Hawley about a month ago asking him about the operation of our elevating device, and he answered that he had never used this machine on a pitch at all; that he was running it on the level all the while.

RDQ121. You have no personal knowledge? A. I have not seen the machine in operation.

RDQ122. It was capable, as you constructed it, of being run on a level? A. Yes, sir.

RDQ123. Or at any pitch from level up to 24 inches? A. Yes, sir.

RDQ124. Then, how clear are you as to whether the narrower machine which you saw at Palmer Falls did or did not have blocking? A. Well, only in a general way that I did not notice that it had any pitch.

RDQ125. And are you sure whether it did or did not? A. No. I am not.

RDQ126. The numbering of those machines you speak of, then, as No. 1 and No. 2, you do not know that those were the numbers used whereby they were known in the mill? A. No, sir, only that was my recollection of their speaking of them to me at that time, but that was a number of years ago.

Re-direct examination closed.

RE-CROSS EXAMINATION.

By Mr. Lyman:

RXQ127. What kind of paper were they making on this No. 2 machine at Rhinelander when you saw it in October? A. On a special fibre paper.

RXQ128. At a slow speed? A. No.

RXQ129. At what speed? A. They told me 465 feet, as I remember it now.

RXQ130. And what about the Hawley machine. At what paper—is that running at a flat wire? A. Why, the samples they sent us was about an 18 or 20 pound fruit wrap paper.

RXQ131. Do you know what speed they are making that paper at? A. They wrote us that the highest speed they had made on this class of paper was 425 feet, using 30 per cent of ground wood pulp in the 18 pound paper.

Deposition closed.

Signature waived.

DISTRICT COURT OF THE UNITED STATES.
DISTRICT OF MAINE.

EIBEL PROCESS COMPANY, Plaintiff,
vs.
MINNESOTA & ONTARIO POWER COMPANY, Defendant.
} In Equity No. 769.

Depositions taken on behalf of the defendant in the above entitled cause, before Margaret K. Barton, Notary Public, commencing on Saturday, June 2, 1917, at 10:30 A. M., at No. 597 Ellicott Square, Buffalo, N. Y., pursuant to stipulation and agreement of the parties, and without notice, notice being waived.

Appearances: On behalf of the plaintiff, Mr. Harrison F. Lyman. On behalf of the defendant, Mr. A. C. Paul and Mr. Maurice M. Moore.

And thereupon the following proceedings were had:

MICHAEL J. ARGY,

a witness called on behalf of the defendant, being first duly sworn, deposes and says, in answer to questions by Mr. Paul, as follows:

Q1. State, will you please, your full name? A. Michael J. Argy.

Q2. How old are you? A. Fifty years old.

Q3. Where do you live? A. I live at Niagara Falls, New York.

Q4. What is your present occupation? A. Superintendent of the Cliff Paper Mills, Niagara Falls.

Q5. What is the general character of the production of that mill? A. News and hanging paper.

Q6. What type of machines? A. Fourdrinier.

Q7. How long have you been connected with the operation of paper mills? A. Well, since I was sixteen years old.

Q8. What was your father's occupation? A. He was superintendent of paper mills.

Q9. What did you do when you first became connected with paper mills? A. I started in work upon machines as oiler and cleaner.

Q10. That was when you were sixteen years old? A. I believe I did work during vacation on finished papers when I was fourteen.

Q11. But your first work was when you were sixteen? A. When I was sixteen.

Q12. What position in connection with the manufacture of paper have you had since that time? A. All the way up from oiler to superintendent.

Q13. What are the different jobs or positions? A. Why, first I went on as third hand on the machine, then I was promoted to back tender, then from that I was promoted to boss machine tender, then I was put on as assistant superintendent, and then since I have been superintendent of mills.

Q14. All of this time you have been actually employed in paper mills? A. Yes, with the exception of four years when I went into the clothing business at Turner's Falls, Mass.

Q15. What years? A. Why, I was twenty-one, I went into the clothing business and remained in the clothing business for four years, and then went back into the paper mill business again.

Q16. What different mills have you been connected with? A. The Montague Paper Mills at Turner's Falls, then to the Palmer's Falls, in the town of Corinth, New York, from there I went as superintendent of the Combined Locks, from the Combined Locks I came to Niagara Falls as superintendent of the Cliff Mills—been there ever since.

Q17. You began then in the mill at Turner's Falls, Mass.? A. Turner's Falls, yes.

Q18. How long did you stay there? A. I was there until—with the exception of the four years I was in the clothing business—I was there until 1891, when I went to Palmer's Falls.

Q19. Palmer's Falls in 1891? A. I think it was.

Q20. How long did you stay there? A. Until 1901.

Q21. And from there you went to the Combined Locks? A. Yes.

Q22. And when did you leave there? A. I came to the Cliff Mills in April, 1902.

Q23. You were there about a year? A. About a year, yes.

Q24. At the Cliff Mill since 1902? A. Yes.

Q25. What was the type of machines used in the Palmer's Falls mills? A. All Fourdriniers—the only mills that I have had any experience with installed Fourdriniers.

Q26. All the time you have been working you have worked on Fourdrinier machines? A. Yes.

Q27. How many machines were employed at Palmer's Falls

when you first went there? A. Seven.

Q28. Were any others put in later? A. Yes.

Q29. While you were there? A. Yes, two.

Q30. When were those put in? A. Why, in 1906 and 1907, I have a record of the production of the number 8 and 9 beginning in January, 1907.

Q31. I wish you would refer to those figures and read them, see if you have the right years?

Mr. Paul: Read the answer.

Answer read by stenographer.

A. I have made a mistake—should be 1896 or 7, I have a record of the machine beginning 1897.

Q32. What was the size of the various machines at Palmer's Falls—you recall? A. Why, I would have to refer to my record of the dimensions of the machines.

Q33. Can you give about the size? A. Yes. No. 1 was a 92 inch machine, what we call a 92 inch Fourdrinier; No. 2 was a 66 inch machine; No. 3 was a 112 inch machine; No. 4 was a 96 inch; No. 5 was a 86 inch; No. 6 was a 86 inch; No. 7 was a 122 inch; No. 8 was what we call a 90 inch, and No. 9 was a 147 inch machine.

Q34. What was the character of the paper that was made at Palmer's Falls? A. All news paper.

Q35. That was so all the time that you were there? A. All the time I was there.

Q36. You remember the length of the wire on those various machines, or about the length? A. Yes. No. 1 was a 40 foot wire; No. 2 was, I think 39 foot 6 inches; No. 3 was a 50 foot wire; No. 4 was a 50 foot; No. 5 was 50; No. 6 was 50; No. 7 a 50; No. 8 and 9, two new machines, were 65 foot wire.

Q37. Can you state whether any of these machines employed any pitch to the wire?

Mr. Lyman: The question is objected to on the ground that there is no foundation in the answer for evidence regarding any machines in use at Palmer's Falls, and it is stipulated that the same objection may be taken to all subsequent questions along this line without repetition on the record.

Mr. Paul: Read the question.

Question read by stenographer.

A. They were all of those pitched up-hill, that is from the breast rolls to the suction boxes they were pitched up-hill, I should call it about three-quarters of an inch, they were pitched up-hill.

Q38. That is the wire from the breast rolls to the suction boxes was inclined up— A. Run up-hill about three-quarters

of an inch, that was our general practice there at that time.

Q39. At what speed were those first six machines that you first run? A. The height—that I have no recollection of—say about 350 feet.

Q40. When were the seventh and eighth machines put in? A. Well, the No. 7 machine was put in about 1900; No. 8 was put in—No. 7 machine was put in about 1890, No, 7 was installed the year that I went to Palmer's Falls, that was 1891; No. 8 was installed in 1896 or 7.

Q41. When was No. 9 installed? A. About the same year.

Q42. And 8 and 9 were the last machines that were installed when you were there? A. Yes, they were.

Q43. What, if anything, was done with the 8 and 9 machines in reference to pitching the wire? A. After starting the machines we speeded them up to—No. 8 we speeded her up to 506 feet a minute, we found that we could not form our sheet or make a good product, we elevated the breast roll end about 2½ inches by blocking up under the stanchions.

Q44. What was the size of the blocks that were used for that purpose? A. Why, I could not state precisely, but my recollection is that they were four or five inch blocks on the breast roll end but pitched down to the suction boxes so that they were no more than shims.

Q45. When you say that you elevated that 2½ inches, where did you take that 2½ inches? A. From the breast roll to the suction boxes.

Q46. So that made the breast roll 2½ inches higher than the suction boxes? A. Yes.

Q47. Were the suction boxes elevated, too? A. Not at that time.

Q48. And the other machines were the—the other machines in the mill were run at what speed? A. About 350 with the exception of No. 7, I believe we did put No. 7 up to 400 feet, we tried it I know because we tried to run the machines 400 feet but the machine was not strong enough to stand the strain, whether we slowed it down after that I don't remember.

Q49. Now, you have spoken of elevating the No. 8, what was done with No. 9? A. No. 9—

Q50. Or was it No. 9 that you mentioned? A. No. 8 was the one that we were just talking about.

Q51. What was done with No. 9? A. We also elevated it same as No. 8.

Q52. At the same time? A. About the same time, after we found that we could No. 8 we put No. 9 up the same amount.

Q53. And at what speed did you run No. 8 and No. 9 after

they were elevated? A. My recollection is about 475 feet, not so great on No. 9 machine, we did not run that as fast as the No. 8.

Q54. That was the No. 9, now the No. 8? A. 506 feet, we never lowered her during my time, we had the machine set for 506 feet and we never lowered it during my time.

Q55. That was for how long? A. I left there in 1901.

Q56. What was the purpose, Mr. Argy, in blocking up these machines so as to give them this elevation of the wire? A. Why, our purpose was in order to get the momentum, in order to have the paper the same speed as the wire, as near as we can, to prevent the roughing—as we called it—it made the formation cloudy.

Q57. What did you find to be the result? A. We got beneficial results immediately.

Q58. And could you run at a greater speed than with it on the level? A. We could not make a satisfactory sheet with the Fourdrinier pitched upwards, after pitching it the other way 2½ inches we made a very handsome sheet, one that was very satisfactory.

Q59. You had been running them pitched upwards? A. Sure, the machines came there originally pitched upwards, but we changed it the other way, down-hill, and the machine began to give better results.

Q60. What about speed? A. We had already put her up to 506, tried it at 506 and at that we got unsatisfactory results—we found we had to do something, and by raising the Fourdrinier we were able to maintain it at 506 and make a satisfactory sheet.

Q61. Did you run these machines at a lower pitch at any time? A. Only a short time with the thick paper.

Q62. Could you get a satisfactory sheet running at less speed before they were pitched? A. Yes, we always got a satisfactory sheet, up to 450 feet a minute; made a nice sheet, but when we had a thin sheet we had to elevate in order to form our sheet.

Q63. When these machines came did they have—were they set for the upward pitch? A. Yes.

Q64. Now, when you put these blocks under the machines, did you leave the machines set as they were? A. I don't know—it was possible to make an adjustment of the breast rolls and the tube rolls, whether we made any or not I could not say, but I presume that there was some adjustment made.

Q65. You don't remember that detail? A. I don't remember that detail, no.

Q66. How clear are you as to the amount of this pitch, this 2½ inch pitch from the breast roll to the suction boxes? A. Why, I am quite positive.

Q67. Did you ever measure that? A. Not personally, no, my father was the man that had actual charge of the operation and he told me at that time that was what it was, and the boss machine tender told me, I took their word for it.

Mr. Lyman: Object to that portion of the answer which purports to state what others told the witness—objected to as hearsay.

Q68. Do you know personally as to the amount of pitch from your own personal knowledge, entirely without reference to what anybody told you? A. Why, I should say that it was elevated, I never put the rule on it to measure it, but any man who is a paper maker could see the elevation—could see that the machines were pitched.

Q69. And could you say from your own recollection how much it was? A. It was at least 2½ inches, I am positive.

Q70. From your own observation? A. From my own observation as a practical paper maker.

Q71. Now, which was the large machine? A. No. 9.

Q72. Was the same elevation used on both of these machines, the No. 8 and No. 9? A. I think so.

Q73. How clear are you on this point? A. My father told me so.

Mr. Lyman: Object to answer as hearsay.

Q74. Mr. Argy, I want to confine the matter of this examination to things that you know personally without reference to what you have been told, and I want you to consider that I am asking for matters that you personally know, and not what you have been told—what can you say as to the matter of your own recollection and personal observation as to the comparative amount of pitch of these two machines—as to whether it was about the same, or whether it differed? A. They, as far as I could say, they were exactly the same.

Q75. Both make the same grade of paper? A. Yes.

Q76. And were they both running on this pitch as long as you remained there? A. As long as I remained there.

Q77. What is the record that you referred to—that you have a reference to that refers to these machines? A. Why, simply that I have a record, when I began to keep a record of their production from the time they started.

Q78. No. 8 and 9? A. No. 8 and 9, yes; I have a record of all the machines; I started I notice on my records 1897 on 8 and 9 late in the year, along in July.

Q79. And was that when those machines were started? A. Yes.

Q80. Then you have the record of 8 and 9 from the time they were started? A. Yes.

Q81. In your own handwriting? A. In my own handwriting, yes.

Q82. And were those machines pitched at the time those records were taken? A. Yes.

Q83. Will you produce that record, the one kept by you? (Witness produces book.) A. There is where I have the No. 8, you see in January.

Q84. This is a memorandum book? A. A memorandum book, that I kept for my own special purpose.

Q85. I notice it goes back to 1894, what was the purpose that year? A. I kept various records of what we used, the amount of sulphide we used, amount of coal, general information, memorandum of what was going on in the plant.

Q86. Is there anything in the prior part of the book, that is prior to 1897, relating to the production of the machines—did you keep any record of the production? A. I didn't keep each machine separate, I kept them as a whole, the total of the mill, I began keeping them separate after 8 and 9 started to see how they compared with the other machines.

Q87. In January, 1897, have you the production of all of the machines? A. Yes.

Q88. That is the production for each month? A. Each month.

Q89. How long did you keep that? A. Why, I kept that until I went on as superintendent, I turned the work over to others, I didn't bother with it any longer; I think it will show you there in the book how long I kept it.

Q90. I notice the record for December, 1900, you have the character of paper marked? A. Yes.

Q91. There was some change in the— A. During that time we made some cheap manila papers, a little more sulphide used, but practically same character of paper as news.

Q92. Was there any material difference in the production of the later machines over the earlier machines that were installed? A. Oh, yes, great difference.

Q93. What about the No. 7, how did that production compare with the production of 8 and 9, if you remember? A. No. 7 was a wider machine and made a great deal wider sheet than No. 8 which was the fast machine, No. 8 was producing more paper than 7 on account of her increased speed.

Counsel for defendant requests that the book produced by

witness be marked for identification "Defendant's Exhibit 8."

Q94. Did you block up the other machines there in the mill before you got 8 and 9? A. No.

Q95. Did you increase the speed of these machines after you put in the 8 and 9 machines? A. I think not, I think they were kept along about the same speed, they were not heavy enough to run much faster.

Q96. Why didn't you block up these machines, 1 to 7, after you blocked up 8 and 9 and found the advantage— A. We didn't consider it necessary, they were not running fast enough to require it, we got good satisfactory formation without it.

Q97. And why didn't you block them up? A. They were not built for speed, they were not strong enough, we considered they were running as fast as their foundations, pulleys and shafts would allow.

Q98. You were getting a good sheet on these machines? A. Yes.

Q99. And run the wire up-hill or level? A. Some of them run ¾ inch up-hill, most of them—none of them but what was run a little up-hill.

Q100. And what was the highest speed at which any one of these early machines was run? A. About 350—360 was about their limit.

Q101. And as compared with—the 8 and 9 were run at what speed? A. No. 8 at 506; No. 9 at 475.

Q102. Were you getting as good a sheet on No. 8 at 506 and No. 9 at 475 as you were on the machines 1 to 7 at the speed they were running? A. Why, yes, I would say we were.

Q103. What was the width of the No. 7? A. 122 inches.

Q104. No. 8 machine? A. 90 inches.

Q105. No. 9? A. 147 inches.

Q106. Can you refer to this memorandum book and give some of the comparative productions for the No. 7 and No. 8 machines? A. Yes.

Q107. Will you do so then? A. Any time?

Q108. When was this record made, what was your practice as to the time when you made the entries? A. About the first of the month.

Q109. You put it down about the first of the month? A. Each month I kept the record.

Q110. What should have been, or what would have been the comparative production between No. 7 and No. 8 if the machines had been running at the same speed? A. Why, the same proportion as to the width of the wire.

Q111. The production should be substantially in proportion

to the width of the wire? A. Yes.

Q112. I understand that the No. 9 machine produced more paper than the No. 8? A. Sure.

Q113. Will you refer to the book and point out some of the records of production comparing No. 7 and No. 8, giving the month you refer to? A. I open the book at July, 1900—No. 7, 804,584 pounds; No. 8 produced 805,639 pounds, the same month, July, 1900.

Q114. Were they both running on the same character of stock? A. Same weight of paper.

Q115. Same weight of paper? A. Yes.

Q116. And for the same period? A. Yes.

Q117. And then the next? A. In August, next page, I have for the period No. 7 produced 857,616; No. 8, 930,098 pounds.

Q118. How many hours per day did these machines run? A. Why, they are supposed to run twenty-four hours a day, we always have to shut down for washing, oiling; we generally consider a machine that makes twenty-two hours a day throughout the year is doing good work.

Q119. How many days in the week? A. Six.

Q120. Did both of these machines, 7 and 8, run substantially the same number of hours per day? A. There was not much difference.

Q121. Any particular shut-down? A. Not that I recall.

Q122. Nothing more than usual? A. Nothing more than the usual shut-down; we don't shut machines down if they have some work, we usually confine them to an hour if we can do it, generally we do shut down, throughout the year, about a couple of hours.

Q123. Do you know John Cunningham? A. I do.

Q124. Was he employed there at the Palmer's Falls mills? A. Yes.

Q125. What position did he hold? A. He was night boss, he worked one week nights and the other week days, along with Tom Woods, he was opposite to him, they worked week about.

Q126. Did you—were you working at the same time? A. I was working days all the time there that time.

Q127. What machines were they using at the Combined Locks mill when you were there, you recall? A. How many?

Q128. Yes, and what make? A. There were four machines there; was two Black & Clawson and two Beloit.

Q129. Were the wires pitched or elevated on those machines? A. No.

Q130. When did you leave the Combined Locks? A. 1902.

Q131. And then came to Niagara? A. Yes.

Q132. And been there ever since? A. Yes.

Q133. What position did you take at Niagara Falls? A. Superintendent.

Q134. You had the superintendency when you came there? A. I had the position.

Q135. Came there as superintendent? A. Yes.

Q136. How many machines were they using in that mill when you came there? A. At Niagara Falls?

Q137. Yes. A. Two.

Q138. How many have they now? A. Two.

Q139. What make of machines? A. One is a Bagley & Sewall and the other Pusey & Jones.

Q140. And their size is what? A. The Pusey & Jones is a 92, and the Bagley & Sewall a 102.

Q141. What kind of paper? A. News and hanging.

Q142. You have the wires on those machines pitched? A. Yes.

Q143. How much pitch? A. 4¾ inches.

Q144. The same on both machines? A. Yes.

Q145. What speed do they run? A. On the Pusey & Jones 425, and the Bagley & Sewall 450.

Q146. No reason for altering the speed? A. Lack of drying surface and short wires, the wires are only 40 foot long.

Q147. This elevation of 4¾ inches is between what points? A. Between the breast roll and the guide roll on these machines.

Q148. You have a continuous pitch? A. Continuous pitch from the breast roll to the guide roll.

Q149. How are the suction boxes? A. They are pitched on the same degree.

Q150. And how do you hold them? A. By blocking.

Q151. Blocks under the standard? A. Yes.

Q152. What is the distance between the center of the breast roll to the guide roll on those machines, about what? A. I never measured it but I should say about 10 feet.

Q153. You get a satisfactory production of paper on those machines? A. Yes.

Q154. How does the quality of the paper that you make on those machines at the Cliff compare with what you were making at Palmer's Falls on the 8 and 9? A. About the same grade.

Q155. Do I understand that all of the entries in this book relating to the production of these machines beginning with January, 1897, are in your handwriting? A. Yes.

Q156. And they were made about the dates indicated? A. Yes, dates indicated.

Q157. That is the dates in the book? A. On the exact dates

indicated.

Q158. Where is Palmer's Falls located? A. In Saratoga county, New York, in the town of Corinth.

Q159. Do you know a place called Fort Edward? A. I do, yes.

Q160. Where is that located with reference to Palmer's Falls? A. About twelve miles down the river.

Q161. What is the—any large town near there or this place? A. Why, Glens Falls is right near FortEdward, across the river.

Q162. And Glens Falls is about twelve miles from Palmer's Falls? A. About twelve, yes.

Q163. Paper mill at Fort Edward? A. Yes.

Q164. Was there a paper mill there in 1897-1898? A. Yes.

Q165. How many presses did the No. 9 machine have? A. Three.

Q166. Was there any other three press machine in that mill? A. No. 8, both had three presses.

Q167. No. 8 and No. 9? A. Yes.

Q168. What was the effect of having the additional press? A. To remove more moisture from the sheet, gave us greater drying capacity.

Q169. Has this book been in your possession since the entries were made? A. Yes, sir.

Mr. Paul: You may question.

CROSS EXAMINATION.

By Mr. Lyman:

XQ170. Do you remember how many presses there were on the other machines at Palmer's Falls? A. Two.

XQ171. The No. 1 to No. 7 inclusive each had two presses? A. Two presses, yes.

XQ172. How many driers did they have on those machines at Palmer's Falls? A. Why, the old machines each had 22, that is from No. 3 to No. 7, I know they had 22; the old machines No. 1 and 2, I don't remember the number of driers they did have, I think less, I am not quite sure; No. 8 and 9, I think had 32 driers; I think I could refresh my memory by looking at a memorandum book I brought—(witness examines book)—I thought I could tell you the number of driers. I simply have the size of the driers but I have not the number; from 3 to 7 to the best of my recollection have 22 driers, No. 8 and 9 I think, had 32.

XQ173. Don't you mean that the No. 8 and 9 had about half again as much drying surface as the others? A. Yes.

XQ174. Drying capacity? A. Drying capacity, yes.

XQ175. You say that all of the entries in that record book

you have produced are in your handwriting? A. Yes.

XQ176. Please look at it again and make sure about that? A. (Witness looks at book.) They are all in my handwriting.

XQ177. When do you think this pitch was put in on machines 8 and 9 at Palmer's Falls? A. In 1897.

XQ178. What part of the year? A. Why, shortly after starting up, I would not say exactly, we were only running a short time before we had to do it.

XQ178a. By a short time—couple of weeks? A. Possibly couple of weeks, or month, starting up a new machine takes two or three months to get it straightened up so that it will run at all any way, but it was shortly after we started the machine up that we had to elevate.

XQ178b. Referring to your two machines at the Cliff Paper Company, taking the first Pusey & Jones, how many presses are there on that machine? A. Two.

XQ178c. How many driers? A. On the Pusey & Jones there is eighteen 36 inch driers.

XQ178d. Were the driers on the Palmer's Falls machines 36 inch? A. 48 inch.

XQ178e. All of them? A. All of them.

XQ178f. How does the drying capacity of eighteen 36 inch driers compare with the drying capacity of a 48 inch? A. Why the difference in the circumference of the relative—the relative capacity with the same pressure.

XQ178g. How many presses are on the Bagley & Sewall machines at the Cliff Paper Company? A. Two.

XQ178h. And how many driers on that machine? A. Sixteen 48 inch driers.

XQ179. Do you know what the rated speed of the Cliff machines is—of these two machines? A. Why, they are run—

XQ180. The rated speed? A. Originally built for?

XQ181. Yes, originally built for? A. I do not.

XQ182. Have there been any increase in the presses or driers since you have been connected with that company? A. There has been no increase in the number of driers nor of the number of presses but I have installed two suction presses which help us to some extent in getting water out, have helped to increase the production.

XQ183. When were those installed? A. About four years ago.

XQ184. Have you increased the production upon these machines since you have had charge of the Cliff mills? A. Yes.

XQ185. What was the speed when you took charge of those machines? A. No. 1 was running about 300, No. 2 not over 325.

XQ186. Did you increase the speed before you put in the suction presses? A. Yes, not as high as I got it now, I didn't get them up to the present speed—after putting in the suction presses I was able to run a little faster, about five per cent faster.

XQ187. Did you put in these pitches that are in the Cliff Paper Mills? A. I did, yes.

XQ188. When did you put them in? A. The present pitch that is on there now, I think I put in there five or six years ago.

XQ189. Were the machines pitched when you came to the mill? A. No, they were both level.

XQ190. When did you first put in any pitch? A. Why, shortly after I got there.

XQ191. When, please? A. About 1902 I came there, I think—best of my recollection I raised No. 1, I am quite sure, the year I came there.

XQ192. How much? A. About a couple of inches, I think.

XQ193. How about No. 2? A. I don't remember about No. 2, but my impression is that I raised No. 2 also about that time.

XQ194. How did it happen that you put on the high pitches five or six years ago? A. Why, I went out to Palmer, New York, on a visit, and I heard that they were raising their Fourdriniers, they had one machine I saw running on 8 inch pitch, they got very nice results and I came back and raised my machines immediately.

XQ195. What do you mean by "Palmer," you mean Palmer's Falls? A. Yes.

XQ196. These same machines? A. Same machines, yes.

XQ197. When you say that Palmer's Falls—when was it that you were at Palmer's Falls Mills, five or six years ago, I mean can you place it more accurate? A. I could not really place that definitely, some years ago.

XQ198. Now, who owned these mills at Palmer's Falls, the International Paper Company? A. At the present time, when I worked there, except the last year or so the Hudson River Pulp & Paper Company.

XQ199. You mean that the International took it over just a short time before you left? A. Yes.

XQ200. Now, when you were there five or six years ago how many machines did you see there? A. Why, I—

XQ201. Which machine did you see there? A. What we called No. 5 in my time, they have rebuilt them since I left there.

XQ202. That was the one that you saw? A. They were experimenting on it the day I was there.

XQ203. That was pitched? A. 8 inches as I remember, they told me it was 8 inches at that time.

XQ204. Did you notice the speed it was running at? A. I did not, no.

XQ205. Have you any idea of the speed it ran at? A. 400 or better, I didn't time the machine, but I know it was running up good speed.

XQ206. 450, perhaps? A. Possibly, yes.

XQ207. How recently have you been in that Palmer's Falls mill? A. Why, I have not been there for four or—three or four years.

XQ208. You have been there since that visit five or six years ago? A. Oh, yes.

XQ209. Did you see the machine at that last visit? A. Why, I was through the mill, just walked through the mill casually, I didn't pay any great attention.

XQ210. How were the machines at that time? A. The last time?

XQ211. Yes. A. They were all pitched high, 12 or 14 inches some of them, especially the new machines, the old machines I don't think were pitched any higher than they were the first time I saw them.

XQ212. You mean? A. The first time I saw them pitched.

XQ213. When was that? A. Well—

XQ214. Five or six years ago? A. Yes, more than that, it must have been—

XQ215. About 1907, wasn't it? A. I think it was along 1907.

XQ216. Well, at that time did you see other machines than the No. 5? A. Pitched?

XQ217. Yes. A. No, they were experimenting on the No. 5 the day I was there, they had just pitched it.

XQ218. Then later on you saw them again before that time when you—before that last visit which you placed at three or four years ago did you—I don't quite get at this point, you said when you last went there all the machines at Palmer's Falls were pitched high, pitched up 12 inches or more? A. Yes.

XQ219. And you state that the No. 8 and 9 were pitched particularly high? A. Yes.

XQ220. How high were they? A. Well they have got two new machines in there—

XQ221. You were not speaking— A. I am speaking about 8 and 9, they have two machines that were put in since I left

there and they were pitched 12 or 14 inches.

XQ222. Now, the others you state were pitched about the same as when you first— A. About 6 or 8 inches.

XQ223. When you first saw them pitched? A. Yes, I don't think they had changed them any.

XQ224. When was it that you first saw that—these others with their 8 inch pitch, how long after the time when you were there when they had just put up No. 5 and given it this pitch? A. Why, I could not place the exact date on that, I go there every year, some years I go in the mill and some years I don't—always go on my vacation.

XQ225. Was it probably the first visit you made to them? A. Quite probable.

XQ226. How are they running for speed on those machines now? A. I don't know just what they are running now.

XQ227. Can you place it approximately? A. They are all running on good speed.

XQ228. That means 500 or thereabouts? A. Their new machines are running more than 500, but the old machines up to 8 and 9—8 and 9 are over 500, but the old original machines with 50 foot wire, I don't think they are running over 450 today.

XQ229. How much are 8 and 9 running? A. The last I heard they were running over 500.

XQ230. Does that mean 550 or 600? A. I could not say

XQ231. Higher than when you were there? A. I think they are.

XQ232. Do you know what pitch they are running the two new machines? A. I don't, no.

XQ233. Now, do you know where they got their idea for raising, or putting in these high pitches at Palmer's Falls? A. Why, they told me they heard it had been put in at Berlin, New Hampshire.

XQ234. At the Berlin Paper Mills? A. They got their idea there no doubt.

XQ235. And did they also tell you that the Berlin Mills were operated with the Eibel patent?

Mr. Paul: Objected to as hearsay.

XQ236. Did they tell you that? A. I don't remember that.

XQ237. Do you remember when you first heard about Eibel and his patent? A. No, I don't, it was along in 1907—along in there to best of my recollection.

XQ238. How did you happen to hear of it? A. Why, at Niagara Falls we are sort of central between the east and west and paper makers are traveling through there all the time and we get all that is going on, rumors and gossip, there is noth-

ing that goes on in the paper mill game that you don't get at Niagara Falls pretty quick.

XQ239. These items of interest travel pretty fast? A. Pretty fast, sure.

XQ240. Well, the information was brought by some paper maker? A. Yes.

XQ241. Do you remember seeing anything about it in the paper trade journals? A. I don't remember anything about seeing that, no.

XQ242. Made quite a sensation at that time, didn't it, Eibel's success with the Rhinelander machine? A. I don't remember hearing anything about Eibel's success with regard to the Palmer's mills, I did hear where they had elevated they had better success.

XQ243. Elevated at Rhinelander? A. I heard it originated there.

XQ244. Referring to the mills of the Consolidated, or of the Combined Locks Paper Company? A. Yes.

XQ245. What was the width of the wire on the two Bagley & Sewall machines? A. I think they were 102 inches, best of my recollection.

XQ246. What was the length of the wire there? A. I believe they were 50 foot wires.

XQ247. What was the speed at which they were run while you were there? A. Why, I think we got them up to 350 some of them, they were not run very fast when I went there.

XQ248. You increased the speed? A. Somewhat, yes.

XQ249. That would apply to both of the Bagley & Sewall machines? A. Would apply to all of the machines, I increased all to some extent.

XQ250. Did you increase them up to about this same, about 350 feet? A. I could not say, I put them up as high as they could be driven by the power they had.

XQ251. You don't remember what that speed was? A. My best recollection is that the best we could do on any of them was about 350.

XQ252. What was the length of the wire in the Beloit? A. They were all 50 foot wires in that mill.

XQ253. Well, do you mean that if you could have made paper at a higher speed that you could not have got power enough to operate the machines? A. Those machines were run by water-wheel, we had a steam engine, but we used to run by water power and we didn't have power enough on the water-wheel to run them any faster.

XQ254. Didn't have any steam? A. One machine had

steam, spare machine, but we used water because it was cheaper.

XQ255. But by coupling the steam you could get high speed? A. By installing a steam engine.

XQ256. By using that engine? A. We were able to run that machine a little faster than the other, 350, she had a weak foundation, the mill was in no conditions to speed up, she was built on wooden piers, the sill was on wooden piers—I was afraid to put them up.

XQ257. Have you seen the machines since you left? A. I haven't.

XQ258. You don't know the speed? A. No.

XQ259. Don't you know whether they have a pitch or not? A. I don't, no.

XQ260. Is the pitch on those wires at the Cliff Paper Company, has it ever been higher than it is now? A. Yes, on the No. 1 I had it up to 8 inches, I think, at one time for a short time.

XQ261. And about the No. 2? A. I think No. 2 is about where we had her set originally. I have not changed that; No. 1 I had her up 8 inches then I dropped her down to try some other experiments with high slice, and put slice back on the breast roll and changed around in various ways to get away from the pitch Fourdrinier if I could, I found that it made a more satisfactory sheet to have the pitch, that machine makes different weights of paper and when we got on a heavy sheet the pitched Fourdrinier did not make a satisfactory sheet—what I would like to have is a Fourdrinier I could move for the weight of the paper I want to run, but I have not got that, but I set at 4¾ where I could make the head and set the slice head, the dam, the height—

XQ262. Why did you want to avoid the pitched Fourdrinier? A. On account of the heavy weight, the horizontal edges do not form well on the heavy weights, on the heavy weights does not work well.

XQ263. Now, you say that you made certain—varied the slice? A. I varied the head of the slice, which helped out to a certain extent when I run on a heavy sheet—or lowered the slice—I raised that dam and this increased the speed of the stock to travel with the wire.

XQ264. Your purpose is to get the stock to run at the same speed as the wire? A. As near as I can.

XQ265. What is the effect of that? A. The smoother the sheet, done so as not to disturb the fiber, as your stock runs out under the slice it begins to form, and if it does not travel the same speed as the wire is going the fiber gets disturbed, the

formation lumpy or ruffled, makes it cloudy, has a poorly finished look—it makes it rough.

XQ266. Wild? A. Wild, yes.

XQ267. What heads do you use back of the stock on this machine? A. According to the weight of the paper I am running.

XQ268. Between what limits does this vary? A. From 2 inches up to 6½ inches.

XQ269. Now, you say that the suction boxes are blocked up in these machines so as to get the same inclination to the wire? A. Yes.

XQ270. You mean that the center of the breast roll is 4¾ inches above the center of the guide roll? A. Yes.

XQ271. How much is the diameter of the breast roll? A. No. I will take that back, it is 4¾ inches from the top, from the outside circumference of your roll.

XQ272. Why did you block up the suction boxes? A. Why, you got to in order to bring your box up, so you can retain your vacuum, if you don't bring those boxes up so they are the same distance all around you get a leak.

XQ273. Could you raise the breast end of the roll without blocking up the suction boxes? A. No.

XQ274. How much did you pitch the No. 2? A. Possibly 3 inches.

XQ275. Not over three inches? A. Not over 3 inches—I want to say in regard to that, that would depend on the length of your wire, on a short wire, 40 foot wire, would not be safe over that, but in Fourdrinier with 65 or 75 foot wire to elevate 3 inches would not affect the suction—the elevation at the suction, that would have been determined by the center at which you set it.

XQ276. Did you ever try to raise a 75 foot wire 3 inches without raising the suction boxes? A. I never run a 75 foot wire.

XQ277. You would not expect to raise a 75 foot wire without raising the suction boxes? A. Yes, you could.

XQ278. How about a 50 foot wire? A. I should think it would bother you some on a 50, but not a 40 foot, you could on a 40 foot.

XQ279. Have you in your Cliff machines an adjustment on the machines just at the breast roll end by which you raise and lower the blocking? A. Blocking?

XQ280. Iron blocks and steel blocks? A. I think I have got wood on there, I have never put in any steel.

XQ281. Would wood stand up all right? A. We have to

change it occasionally, not much of a trick to change it.

XQ282. At the time they were raising that machine at—No. 5 at Palmer's Falls, when you saw it blocked up there to 8 inches about 1907, you remember what kind of blocks in under the wire, under the breast roll? A. No.

XQ283. Whether they were steel or wooden? A. I don't remember.

XQ284. Other things being equal you can get more speed out of a machine with a long wire than you can with a short wire? A. Yes.

XQ285. How much difference in speed, how much more speed can you get out of a 50 foot wire than out of a 40 foot wire, other things being equal? A. I could not say exactly, I know that you get more, but how much I would not be able to say.

XQ286. Well, you know how much you would expect to get out of a 65 than out of a 40 foot wire? A. Why, yes. you could get fifty per cent more.

XQ287. Now, referring to those machines at Palmer's Falls, No. 1 to 7, have any changes been made in them so far as you know since you were there except in the matter of pitch? A. Yes, they have been entirely rebuilt, all of them have had new Fourdrinier parts, I think they have added the new driers, they have changed the entire plant all through since I was there.

XQ288. Why is it that you get 450 feet on your Cliff machines when you could not get but 300 or 350 on the Palmer's Falls machines? A. The Palmer's Falls machines the entire back line at the time I was there was too light, gears were too small, shafts and everything was too light, it was the case at the Cliff, when I came there I had to strengthen up the back lines, change the entire drive of the machines before I was able to get up to the speed I am now.

XQ289. That could have been done at Palmer's Falls? A. Was done, has been done since I was there.

XQ290. But I mean if you had supposed you could get those machines up to 450 you would have done it? A. At Palmer's Falls?

XQ291. Yes. A. We were figuring on it when I was there, that was the intention to do it when they had the opportunity, waiting for chance, they did it after I left.

XQ292. Well is there any other reason other than the fact that you now have a pitch, carrying a pitch on your Cliff machines and didn't on the machines No. 1 to 7 at Palmer's Falls, that enables you to run faster on the Cliff machines by 100 feet than you did at Palmer's Falls?

Question read by stenographer.

A. That is a hard question to answer, there is so many different conditions on the machines that you have to sort of start at the bottom and strengthen things up and replace them as you go along, that I could not answer that question right out and out, there is other reasons, it is a sort of process of evolution as it were, you begin and try a machine out, you break something—you strengthen it, you keep on increasing the size until you get the machine running up there—that is my experience at the Cliff.

XQ293. The pitch is, however, one of the things? A. One of the things we get with several other combinations.

XQ294. And you could not get that increase and get satisfactory paper without a pitch? A. No, not satisfactory, we regulate the pitch in order to get the formation.

XQ295. In those Palmer's Falls machines how did they get that up-hill arrangement, was there adjusting mechanism for the breast roll end of the machine? A. There is in all paper machines.

XQ296. Did that allow you to run it little up-hill or on the level? A. Yes.

XQ297. Or perhaps ½ inch down-hill? A. Machines as a rule were made to just below the level, but I don't think any of them was made to go above level, there was an adjusting screw that you got ¾ of an inch.

XQ298. What was the reason, if any, for that adjustment? A. Why to have drainage, if your stock was very slow why by dropping down it had a tendency to retard the water running down the roll and out through the wire.

XQ299. Give it longer on the wire? A. A little longer on the roll, the stock is not any longer on the wire, but being held, or run through the wire easier than when running down-hill.

XQ300. The theory of ruuning it slowly down-hill was to conserve all that space? A. That is—it was—it would have that effect, it would carry the water down.

XQ301. That is to say if you were dealing with a free stock— A. You would pitch it down.

XQ302. That would give the stock a short time on the wire to form, but it was not run so much— A. The stock would be on the wires the same length of time, run at the same speed, but the water would have more of a distance to carry down the wire, but the stock is always carried at the same speed.

XQ303. And that was the purpose for which these pitches were used at the Palmer's Falls mill? A. Yes.

XQ304. Now, referring again to the Combined Locks ma-

chines, how many driers were there on those machines? A. I think there were 22 on all of them.

XQ305. How many presses? A. Two presses.

XQ306. All alike in that respect? A. Yes.

XQ307. You think 350 feet was the utmost speed that could be gotten on those machines? A. Why, I understand that after I left there No. 3, one of their machines, they put up to 400 feet, how long I do not know, but I don't think they kept it there a great while.

XQ308. Why was it you did not put in any pitches on those machines? A. Why, it was not necessary, we could form our paper all right at the speed at which we were running, we didn't need the raise.

XQ309. Would you not like to go faster? A. I wanted to.

XQ310. Why wouldn't they allow you? A. We didn't have the power to start with, there was a lot of changes, great expense, practically build the machines all over; I really was not there long enough to get them satisfied that I was right in trying to do it; I was only there a year and a man can't do much in a year.

XQ311. You don't know you say, I believe, the speed at which the two machines at the Cliff Company were originally built to be run? A. Why, I don't, no.

XQ312. Did you go to Palmer's Falls that time in 1907 to see the pitch work? A. No, sir.

XQ313. You happened to be there on your vacation? A. Yes.

XQ314. Was it before you went there that you heard from paper makers about the Rhinelander machines? A. I don't remember.

XQ315. You left Palmer's Falls, the employ of the Palmer's Falls mills in 1901, I think you said? A. Yes.

XQ316. Were you back there in between 1901 and 1907? A. Yes, I was back there several times, I go back there every year—trout fishing in the spring.

XQ317. Did you notice the condition of 8 and 9 machines during those years? A. I can't say that I paid particular attention to it, as a rule I simply went down to visit the boys in the mill, then in the mill—walked through—I was on my vacation and didn't bother much.

XQ318. Isn't it a fact that that blocking was removed? A. From 8?

XQ319. Yes, 8 and 9? A. Not that I know of.

XQ320. You don't know whether that is so? A. No.

XQ321. You said that these No. 8 and No. 9 machines at

Palmer's Falls there was a pitch of about 2½ inches between the top of the breast roll and the suction boxes? A. Suction boxes, yes.

XQ322. How much was there between the top of the breast roll and the top of the guide roll, you think? A. It would be the same as the suction box because the suction box was not raised, they were on a level with the guide roll.

XQ323. So the total pitch would be about 2½ inches from the breast roll to the guide roll? A. Yes.

XQ324. That is a figure you give from recollection, from examination or measurements? A. Never measured it myself.

XQ325. Is there anything in that memorandum book about it? A. No.

XQ326. Can I see the memorandum book? A. Yes.

XQ327. I don't want to take anything private? A. There is not anything private, memorandum book of my father's.

XQ328. This is not your handwriting? A. No, he shows where he kept a record of No. 8 and 9 in 1897, which verifies my point, the machine started in that year, these are not all my father's writings, my brother has written in some memorandums in one place.

XQ329. I notice that this memorandum book gives the speed of the No. 9 machine as 400 feet? A. Well that was speeded up afterwards, you know when you start up a machine you start her at a certain speed, and work up to whatever speed you can get up to.

XQ330. That your father's entry or your entry? A. My brother's entry.

XQ331. You know when that was made? A. I don't, I don't know when he did make that entry.

XQ332. Did you ever read the Eibel patent, or have it read to you, do you remember? A. No, I never have.

XQ333. What was the head at which you run on those machines at Palmer's Falls, between the slices?

Mr. Paul: You mean 8 and 9?

Mr. Lyman: All of them.

A. All of them?

XQ334. Yes. A. No. 8 and 9 we carried—I remember measuring the height of No. 8 once, 6½ inches, they could carry higher than that, I think they could carry up to 7½ inches, the other machines we did not carry as high a head, probably didn't carry over 3 or 4 inches head, slower machines.

XQ335. Are you familiar with the condition of news machines throughout the country? A. Fairly so.

XQ336. The pitch is universally used on them now is it not?

A. All that I know of.

XQ337. All have high pitches? A. More or less.

XQ338. I take it that the first substantial pitch that you saw on a machine was the one on the No. 7 at Palmer's Falls? A. No. 5 at Palmer's Falls.

XQ339. No. 5 in 1907. A. The date I am not clear on, approximately around that time, that was the first time I saw the high elevation, up to that amount.

XQ340. Mr. Argy, why—on what basis do you make the statement that the distance from the breast roll to the guide roll on the Cliff machines is 10 feet? A. I told you I didn't exactly know, but I thought it was approximately in that neighborhood.

XQ341. What is the distance from the center breast roll to the guide roll on a machine that has a 70 foot wire? A. Don't know.

XQ342. You never measured that distance? A. I possibly may have but I don't recall now what the distance is.

XQ343. What is the distance from the couch roll to the breast roll? A. Why that varies on the different machines.

XQ344. Well, I mean on your machines? A. On our machines, oh, about 12 inches I should say, 12 or 14.

XQ345. And where is all the rest of that 40 feet of wire? A. Forty feet?

XQ346. Forty, if there is only 10 feet from the guide roll to the breast roll— A. Why, I understood your question from breast roll to suction boxes?

XQ347. I don't mean—what is there from breast roll to suction boxes? A. I would not want to state in figures.

XQ348. That is what you had in mind when you said 10 feet from the suction boxes? A. The suction, yes, be about 8—5 feet, guide roll is about 8 inches from the suction box, 48 and 12, about 5 feet.

XQ349. The total distance you estimate it is about 15 feet? A. 15 feet.

XQ350. 15 feet from breast roll to guide roll? A. Yes.

XQ351. It may be as much as 16 or 17 feet? A. On 40 foot wire?

XQ352. On your machines? A. Your stock, wire runs from the couch down, you take part away, there is not much formation surface on a 40 foot wire.

Mr. Lyman: I guess that is all.

RE-DIRECT EXAMINATION.

By Mr. Paul:

RDQ353. Mr. Argy, on direct examination I understood you

to say that the purpose of the pitch of 2½ inches on the Palmer's Falls machines was to give the stock the speed of the wire, and is that right? A. Yes.

RDQ354. And on the cross examination I got the impression that you said it was for drainage? A. Pitches down-hill, no, sir, you misunderstood me.

RDQ355. If you say that, do you mean it? A. I don't mean it—where it runs uphill it is for drainage.

RDQ356. You don't mean that the 2½ inches down is for drainage? A. No, it is just the contrary—the water runs down faster than up-hill, pitches up-hill for drainage.

RDQ357. Is there any difference in the given pitch on the Cliff wires, as you are using them, and those at Palmer's Falls? A. Any difference—

RDQ358. In the pitch? A. No difference.

RDQ359. Have the same purpose? A. Have the same purpose, sure.

RDQ360. You said that when you were out there at the Palmer's Falls some years ago they were changing or putting the pitch in the No. 5 machine, had that machine been strengthened or changed in any way? A. I don't recall, I think it had.

RDQ361. I understood you to say on direct examination that you could not speed it up when you were there on account of its weakness? A. Yes.

RDQ362. Do you know whether there had been any changes? A. All the machines had been changed to the best of my recollection, or I think that was so.

RDQ363. Were all of the old machines in there at that time, 1 to 7? A. Yes.

RDQ364. And those machines are still there? A. Still there.

RDQ365. But have been remodeled? A. Remodeled all through.

RE-CROSS EXAMINATION.

By Mr. Lyman:

RXQ366. Speaking of the purpose of that slight pitch of one or two inches up, or one or two inches down, as I understand you, the purpose of that up-hill pitch is to increase the drainage? A. Up-hill is to increase drainage.

RXQ367. And the purpose of the down-hill pitch is to decrease drainage? A. The purpose of the down-hill pitch is to get your stock traveling with the wire, to carry the water with the stock, the purpose of the up-hill pitch is to lower the wire and drain it more freely.

RXQ368. That is the purpose you were preparing for with

the down-hill pitch at the Cliff? A. We are pitched with the down-hill pitch to make the stock travel with the wire—get better formation.

RXQ369. And you state that the effect of running the stock down-hill an inch or two is just the opposite to running it up-hill an inch or two, in that running it up-hill an inch or two causes it to drain better and therefore was the proper method of dealing with slow stock, whereas running it down-hill an inch or two causes it to drain less and therefore was the proper method of dealing with quick stock, is not that so? A. To some extent, but when you are keeping that water in there you are accomplishing the very purpose that I said, that is—you are keeping your stock mixed and traveling at the same pitch with the wire, keeping the water in does not allow it to drain, so it will go at the same pitch to the wire, the same speed to the wire, if it travels too fast it thickens up.

RXQ370. You sent it down-hill at Palmer's Falls for the purpose of keeping the stock more fluid until it got down to the suction boxes? A. It would have been so.

RXQ371. Well, it would have been so if they had— A. It would have been fluid at the suction boxes.

RXQ372. And that was the purpose? A. Not particularly, it had that purpose and also the increasing the speed and get it out—the fluid active, to give it impetus to travel with the wire.

RXQ373. Impetus to travel with the wire by keeping it in a fluid condition? A. Give it more chance for gravity to work upon it, push it down.

RXQ374. Mr. Argy, I want to read you this passage from a patent that described this process of lifting the breast rolls a little above the level, or pitching it a little above the level and states the purpose for which it is done, and ask you if you agree with it—"In certain kinds of pulp, notably the wood pulp which is now largely used in making paper, the water drains away very rapidly so that the pulp may become nearly dry before it leaves the shake frame and thus not be properly laid when it reaches the rollers. This tendency may be obviated to a considerable extent by downwardly inclining the shake frame toward the rollers, so that the water tends to travel along with the pulp and will not therefore drain out through the wire so rapidly"—is that a correct statement? A. Sure, a correct statement as far as it goes, but when you come to get a wire traveling at a high speed the resistance of the air brings the stock—in order to overcome the resistance of the air you have to lift the Fourdrinier to get the stock to travel with the

wire, that is correct but you also have to have the incline to have the stock travel with the air.

RXQ375. The resistance with the air is that what causes that commotion on the wire? A. Sure to some extent.

RXQ376. And that is—and by using this pitch have you overcome the resistance of the air? A. Yes.

Mr. Lyman: That is all.

Signature waived.

JOHN T. CUNNINGHAM,

a witness called on behalf of the defendant, being first duly sworn, deposes and says, in answer to questions by Mr. Paul, as follows:

Q1. What is your name? A. John T. Cunningham.

Q2. Where do you live, Mr. Cunningham? A. Mechanicsville, N. Y.

Q3. What is your age? A. Fifty-seven.

Q4. What is your occupation at present? A. Well I am a contractor in a way, I take painting and some building.

Q5. You have worked in paper mills? A. Yes, it was my whole life work.

Q6. Where were you first employed in paper mills? A. Well, it was quite a number of years ago. I was about eighteen years old when I first went in a paper mill.

Q7. How long did you continue to work in paper mills? A. I worked in paper mills until 1906.

Q8. What were the principal mills in which you worked, Mr. Cunningham? A. I worked in, well the principal mills I worked in—at Ticonderoga about somewhere in the neighborhood of four and a half years, then I worked in Massachusetts a year.

Mr. Lyman: Where?

A. Place called Old Furnace, Mass., I worked in Malone, N. Y., and I said Ticonderoga, I went from Ticonderoga to Palmer's Falls.

Q9. When did you go to Palmer's Falls? A. 1890.

Q10. How long did you stay there? A. 1906, nearly 17 years, I call it about 17 years because I was half of one year and half of the other, I went there I remember in the fall and I left there in the spring.

Q11. Have you worked in paper mills since you left Palmer's Falls in 1906? A. Yes, I worked at Norwood, N. Y.

Q12. Any other place? A. No.

Q13. When did you quit the paper mill work? A. When I

quit Norwood.

Q14. When you quit Norwood? A. Yes.

Q15. When was that? A. 1907.

Q16. Now all of these mills which you worked in have Fourdrinier paper machines? A. All of them.

Q17. What was your different kinds of work that you did in connection with these machines from the time you started? A. Well all the mills that I worked in—in the mills that I worked in I was machine tender until I went to Palmer's Falls, that is, of course I had to learn when I was a boy, I was a back tender and I grew on up from that to machine tender, boss machine tender, night foreman and superintendent.

Q18. What was your position when you first went to Palmer's Falls in 1890? A. Machine tender.

Q19. And how long were you machine tender? A. About two months.

Q20. Then what position did you have? A. I got boss machine tender or night foreman.

Q21. How long were you night foreman? A. I think about nine months.

Q22. Then what was your next position? A. Head boss machine tender and foreman after machine tender.

Q23. And after that what position did you have? A. Then I was put back on night foreman again, I remained there sometime, I don't know just how long, and then I was appointed superintendent.

Q24. When did you become superintendent? A. I was superintendent about four years before I left there.

Q25. About four years before you left Palmer's Falls? A. Yes.

Q26. What is the duty of a machine tender? A. The duty of a machine tender is to make paper, run the machine and take care of it.

Q27. And what is a back tender? A. He is the machine tender's helper.

Q28. What is the position of the boss machine tender? A. He is the responsible part of the whole thing in regard to making the paper, and the quality, etc.

Q29. All the machine tenders come under him? A. All the machine tenders come under the boss machine tender.

Q30. How many Fourdrinier machines had they at Palmer's Falls when you were there? A. Seven.

Q31. Any put in later? A. Two.

Q32. When were these put in? A. About 1896 they were installed.

Q33. You remember about the size of these machines that were in there when you went into the mill? A. The ones that were there when I went there?

Q34. Yes. A. I do.

Q35. You state what the sizes were? A. There was one 108; one 120; there was one 90—no hold on now there was one No. 4 was 84, and No. 5 was 80; No. 6 was 80, those were the seven, and No. 1 and No. 2—No. 2 was a 72 and No. 1 was a 64—these are inches.

Q36. That relate to the width of the wire? A. Yes, was the width of the wire, yes.

Q37. Do you remember the lengths of the wires on those machines? A. Well, I can't exactly remember the lengths.

Q38. How did they run, what were the long and what the short ones of these seven? A. I cannot just remember the length of the wire, it is quite a while, they was all different lengths.

Q39. And what was the size, you remember? A. They was very small machines, one was 39 feet, I think that was the smallest.

Q40. And the next? A. I think the next was 54, that was the No. 7.

Q41. These seven machines they had when you went in there, what was the arrangement of the wire as to the horizontal?

Mr. Lyman: Question objected to as not relating to any defense set up in the answer, and it is stipulated that the same objection may be regarded as taken to all questions along this line.

Question read by stenographer.

A. Well, to the best of my judgment, they were all level.

Q42. All the seven machines? A. All of the seven machines.

Q43. Now what do you mean by level? A. They was level at one end or the other, at the breast roll or the couch roll end, that there is a drop always from the suction boxes to the couch roll, but from the breast roll to the suction boxes level.

Q44. Now you speak of machines that were put in in 1896, or about that time, what numbers were they? A. We called them No. 8 and No. 9.

Q45. And they went by these numbers? A. Yes, sir.

Q46. What was the size of those machines? A. One was a 84 wire and the other 148.

Q47. Which was the 84? A. This is the widths.

Q48. The widths? A. The 84 was No. 8; No. 88 was No. 8.

Mr. Lyman: The No. 9 was what? A. 148.

Q49. Do you remember the length of the wires on the No. 8 and No. 9? A. 64 feet long.

Q50. What was the arrangement of the wire on these machines as to the pitch or horizontal position? A. Well on one of the machines I remember was a little drop at the breast roll, that was No. 8, just exactly how much of a drop I cannot quite remember.

Q51. It was lower at the breast roll? A. A little lower, just a little, we had a little trouble with leveling up and found—

Q52. What did you do with this machine? A. We done a little of everything before we raised that end up there, we did quite a few things before we did raise it.

Q53. What did you do by raising it? A. We could not get the speed out of the machine that we wanted, and that is how we come to find out that end was lower, and we done quite a few things—raising the flow, raising the slices, lowered the slices, and many things until we found out that we should raise that end.

Q54. What did you do to raise that end? A. Mr. Argy and I worked together.

Mr. Lyman: What Mr. Argy?

A. Mr. William Argy, the senior, and we spoke about raising the machine that end, and it had to be raised as far down as the shake roll of the machine with different size of blocks in under the legs so as to bring it all parallel together, and it would be at right pitch.

Q55. When you got it raised what pitch did you have it? A. I think that we had it 3 inches high at the best of my recollection, I think it was three inches.

Q56. That is your recollection, that it was 3 inches higher at the breast roll? A. Yes, sir.

Q57. And 3 inches higher than at the suction boxes? A. Yes, 3 inches higher than the rolls at the suction boxes, carrying rolls just above the suction boxes, or just before you struck the suction boxes.

Q58. What was your purpose in doing that, what did you gain by it? A. We could make paper but the formation of the paper was not what we wanted, and it would not suit the market because it was lumpy, and was what we called a wild looking sheet, and we concluded that the wire was going too fast for the flow of the fiber, when it come to the rail they would be dragging, they knew we had to get the flow so it would come a little more rapid with the wire, that was the purpose.

Q59. That why you raised it up? A. That is why.

Q60. After you raised it up what did it do? A. It did bet-

ter, wire didn't leave the stock.

Q61. How do you mean that the wire would leave the stock, can you explain that? A. Well, when the stock came onto the wire it laid perfectly sluggish and the wire would run out from in under it and it would instead of weaving a sheet of paper with the shake that is there to throw it longitudinally, it would practically hold and stretch the fibre, and when you throw the sheet down it would tear straight, you could separate it right down straight, but with a Fourdrinier machine it is almost impossible to tear the sheet straight because the fibers are supposed to be mingled together, and by the flow going through there sluggish, or going out over it too fast, it practically throwed the fibers out and straightened them when they followed the wire.

Q62. What was the effect of this raising of the flow by giving the wire the pitch? A. It gives a better sheet.

Q63. How did that effect this operation that you have described, what effect did it have on it? A. In raising the breast roll?

Q64. No, the action of the water on the sheet? A. The wire tipping that way the water had a better chance to go out with the wire, formed the bottom, and then it would not disturb the bottom, and it would lay right along together and fill in on the top.

Q65. What do you mean that the water had a better chance to go out with the wire? A. It was running down-hill.

Q66. What effect would that have? A. Made it go a little faster.

Q67. Made the water go faster? A. Yes.

Q68. How did that influence the action of the wire on the stock that you speak of, what did it do? A. Well, I cannot tell only it run out there and kept the speed of the wire pretty near it, could not really keep the speed of the wire but as far as we could see it went fast to the wire, and held the water in better so that it would form together.

Q69. And that was the action as you saw it? A. Yes, sir.

Q70. What about the speed of the machine after you adopted this pitch? A. We speeded the machine up.

Q71. How much? A. Well we were running about 470, or 450 to 75, we speeded that machine up to 525, some days we run 540, it depended a good deal on the condition of the stock, some days it would have to go a little slower but very seldom because the machine was connected to an engine, after we put the engine up to 525 we keep it there and if anything bothered about it we had to shut down.

Q72. What was your position when this pitch was given to these machines? A. I was boss machine tender.

Q73. And were you in a position where you were familiar with the machines? A. I engineered that pitch on Sundays, I oversaw the job, that it was done right.

Q74. You put in this change? A. The mechanics did but I was there.

Q75. Were you familiar with the working of the machines as it went on from day to day? A. Yes, sir.

Q76. How it was operating? A. Yes, sir.

Q77. How often did you see the machines? A. I saw the machines every day, if it was not in the day in the night.

Q78. Every day? A. Every day or night, I shifted every week, I was on one week days and the next nights.

Q79. Now this was the No. 8 machine, how about the No. 9? A. We did the very same thing with the No. 9.

Q80. How soon after? A. After we found out this thing was a success we raised the No. 9.

Q81. How long after do you think it was? A. I cannot remember just how long.

Q82. What is your best recollection? A. It might be a month or so.

Q83. Now did you change the other machines, 1 to 7? A. I don't recall.

Q84. You don't recall? A. I don't remember, the other machines was not made for fast running and I don't—I don't think we paid so much attention to that.

Q85. Did these machines continue to operate at this pitch? A. Yes, sir.

Q86. All the time? A. Yes, sir.

Q87. Was that pitch ever changed up to the time you left there in 1906? A. Never.

Q88. How was the position of the suction boxes, were these raised too? A. No, sir.

Q89. Remained on the level? A. Yes, sir.

Q90. The wire was pitched from the breast roll to the suction boxes? A. Yes, sir.

Q91. You speak about experimenting with the head, what did you do there? A. Well, what we call the head is the flow, that is the paper in the required condition, that is the paper, we call that the flow or head that comes from the screen into what we call the flow box, but in order not to increase the speed of that in raising or lowering the water head we raise or lower the head, or raise the water, but of course the water is the paper, we put in some water and that makes a pond behind the

slice and the higher we get the head the more force there would be out in under the slice.

Q92. What effect would that have? A. We was trying to drive it faster before we raised the breast rolls.

Q93. That you tried before you raised the breast rolls? A. Yes, sir.

Q94. What was your purpose? A. Trying to make the sheet go out faster with the wire.

Q95. Faster? A. Yes, sir.

CROSS EXAMINATION.

By Mr. Lyman:

XQ96. How high did you raise the head in the flow boxes in both machines? A. There was times when we would have it on the—

XQ97. Back of the slice? A. We would have it four or five inches.

XQ98. That was the highest? A. That is the best I can recall it at, I never measured with a rule.

XQ99. Why didn't you raise it higher? A. Because it would run over the slice walls, or it would run back over the back part.

XQ100. Could you raise the walls? A. If we did we would make our paper heavier, the walls control the thickness of the paper.

XQ101. Well the wall opening controls the thickness of the paper, could you raise the walls of the flow box? A. We would have to—

XQ102. Could you raise up the wall so as to get a higher head? A. We had the head near as high as the walls.

XQ103. Why didn't you have a higher wall in around the slice box? A. We didn't.

XQ104. Could you? A. Would have had to build quite a bit to make that pond, we had what we thought was a large one then.

XQ105. Five or four inches? A. Five or six inches.

XQ106. Could you have gotten the same results by raising it higher if there had been reason for it? A. I don't think we would have gotten the same results.

XQ107. Why not? A. Because if we went to push our paper too fast in under there the—we would disturb the piece on the wire, we would turn it up.

XQ108. Well— A. When this paper gets in out under there it forms at the bottom, now if we rush that too hard it would disturb that bottom and we would have worse results,

where if we have the speed of the wire for it and the other follows—

XQ109. What other follows it? A. The rest of the flow.

XQ110. Explain that, can you? A. I say that when the paper first strikes the wire—

XQ111. You mean by the paper the stock? A. The stock, when the stock first strikes the wire of course there is nothing in the mesh of the wire and the water and paper will go in, the paper will go through at once and it will shut off by the forming of the paper on the meshes, but there is the other water right there to the top of that, and that makes the sheet before it goes to the suction boxes.

XQ112. Well, now I should judge that the faster the paper started on the wire by raising it an inch, raising the flow box— A. I could not tell you—I don't know.

XQ113. How much did you raise the head of the flow box in this instance, I mean the head of the slice? A. Perhaps we raised it 2 inches.

XQ114. Well, how much faster did the stock start on the wire after you raised it that 2 inches than before you raised it? A. I could not tell.

XQ115. Ten feet a minute faster? A. I could not tell you that.

XQ116. Will you give us your best judgment? A. I could not give you much of an intelligent answer on that because I was trying experiments on that, we simply changed the forms and see what results we were getting.

XQ117. What you wanted to get was to get the stock to enter upon the wire at the speed of the wire, is that right? A. As near as we could.

XQ118. What I want to know is why you could not get that result just as well by raising the head a little more than you had it as you could by blocking up the breast roll? A. Well, we got the force out in under that slice, you can force it just about so much, to travel along with the wire is what we was after, we could put it out through there so that it would tear the bottom off we had formed, the results would be worse, the idea is to get it, or give it the pitch so that it would stay in there as it was going along toward the suction boxes.

XQ119. What would stay in there? A. The water.

XQ120. And the trouble— A. You had a quick stock—we had a slow and a quick stock.

XQ121. And the trouble was the water was not going far enough down the line? A. That was the trouble, we could not carry our water and get the speed.

XQ122. You wanted to get the water flowing down the line? A. We wanted to get the water further down and not use any more head, we could use head enough but we could not get the water out to the suction boxes.

XQ123. The trouble you found was that the water was leaving the stock too early and the wire was not going down to the suction boxes? A. Well, that was not all our trouble, the trouble—the formation of the paper did not appear to be right on account of the wire running a little fast, or too fast for the stock, it was running away from it, that was practically the trouble, the stock was not following it fast enough, the wire was running away from the stock.

XQ124. What is the function of the dandy roll? A. The function of a dandy roll is to mat the paper together as it is, and to put a wire mark on both the top and bottom.

XQ125. Well now did you have to have the sheet just about so when it reaches the dandy roll not too wide nor— A. Just about right when it reaches.

XQ126. Otherwise the dandy roll will not have the effect it is supposed to have? A. The dandy roll will pick up the edges.

XQ127. And your stock was not coming right for the dandy roll? A. The dandy roll does not—

XQ128. Well your stock— A. The dandy roll does not form the paper, if the stock is not formed before it comes to the suction boxes it never is formed.

XQ129. It was not coming right to the suction boxes? A. It was not coming right.

XQ130. The difficulty with it was in the matter of its quantity of water—the quantity of water that it held—was that it or was it something else? A. The quantity of water that it held?

XQ131. Yes, or didn't hold at the suction boxes? A. The difficulty that we had the wire was running away from the paper, and if we raised our head so high that we rushed it in we would tear the foundation of the sheet.

XQ132. Now, you have said a dozen times that the wire was running away from the stock— A. We could tell that by the way it rolled the stock up in under.

XQ133. What do you mean? A. It would roll the fibers up, exactly as you raise any fibers up, roll them up.

XQ134. How can you roll the fibers up? A. I don't know as I could tell you unless I had you right there.

XQ135. You can tell me, I am sure, what you mean by rolling the fibers up? A. I answered that once—you take—as I say when it was dry the paper, or the wire run away from the

stock, the fibers—it would straighten up the fibers instead of letting them weave together and mingle together, it would straighten them out and the sheet would not form right on the bottom.

XQ136. Would that trouble show itself in the finished paper? A. It did.

XQ137. And not in the appearance of the stock on the wire? A. Our experience was that we can tell when we look on the paper on the wire.

XQ138. Just tell me how that did look? A. It was cloudy.

XQ139. What do you mean by cloudy? A. It was not formed.

XQ140. Where did you look right on the wire? A. Right on the paper.

XQ141. What part of the wire? A. Between the slice and the suction boxes.

XQ142. You could tell whether it was lumpy or not? A. Yes.

XQ143. What are the lumps like? A. A little thicker in some places than others.

XQ144. Matter of quality? A. Not a matter of quality, matter of thickness or thinness.

XQ145. That is there were spots where it was thicker and other spots where it was thinner? A. Yes.

XQ146. Did you observe that after the sheet had started down or before? A. We could not see it until it was started through, just before it gets to the suction box you can see that you was forming a sheet of paper right.

XQ147. The difference appeared in this matter of spots rather than in any commotion in the stock on the wire? A. There had to be a commotion or the spots would not be there.

XQ148. Now how did you know whether the trouble was with the stock, that the stock was running away from the wire, or the wire running away from the stock? A. That was nothing more than our experience.

XQ149. You have no idea why it was? A. Well, yes, I had the idea.

XQ150. Now after you put in this pitch did I understand that the stock entered upon the wire at the speed of the wire and you had no further trouble? A. It entered upon the wire faster than it did, we had—

XQ151. After you put in the pitch did the stock enter upon the wire at the speed of the wire? A. Well, I could not answer that.

XQ152. What do you— A. I know that it entered on the wire faster, that is all, I could not tell the speed of the wire.

XQ153. Just how was putting the pitch upon the wire causing the stock to enter— A. I don't know how to explain that any other way than water running off the roof.

XQ154. How running off the roof? A. Run down-hill instead of up or on the level.

XQ155. Why did you want to run the water and stock up-hill— A. Why did we?

XQ156. On the other machines No. 1 to 7? A. I never remember of those running up-hill.

XQ157. Were these other wires all flat? A. As far as I know.

XQ158. Would you have known it if they had been run up-hill? A. I would.

XQ159. Is that a thing upon which you and Mr. Argy are likely to have different recollections? A. I don't know what Mr. Argy had.

XQ160. He would know as much about it as you? A. It is up to him.

XQ161. Did you ever see any machines run with the wires up-hill? A. Yes.

XQ162. What was the reason that these were run with the wires up-hill? A. Because we didn't want the water to leave the stock.

XQ163. You had slow stock? A. We wanted to make it slow.

XQ164. You had slow stock and you wanted to give the water a chance to drain out, was that not it? A. The difference is in the pitches, an up pitch and a back pitch, and different paper is made on these pitches, back pitch is practically down.

XQ165. An up-hill? A. The water might run up-hill, so as to hold it in longer, shake it together, form the sheet better because the machines run slower.

XQ166. Now if I understand you this is what you say—that when you are making—when you are forming a thick sheet perhaps, or using a stock that is naturally a slow stock you run the wire slightly up-hill so as to give it longer to drain, is that right, and thereby, by draining longer, improve the formation of the sheet, is that right? A. You know you can hold your water in your paper, and if you can get it out when you get to the suction boxes, the better your paper forms on the wires.

XQ167. Well, is not my question clear to you? A. Well I don't know, but that is answering the question.

XQ167a. I will ask it again—is the reason for running the wire up-hill, the fact that you are using a stock that is slow and therefore you want to give that stock longer to drain so as to improve the formation of the sheet? A. No.

XQ168. What is the reason for it? A. If you are running that machine up-hill, and you have got slow stock your water will stay longer in it—

XQ169. Yes? A. But if you have got slow stock your water will stay in anyway.

XQ170. Can you state any earthly reason for running it up-hill? A. Just as I told you, hold the water in longer, and the longer you can hold it in the better you are forming the sheet.

XQ171. Well— A. On slow book machines.

XQ172. Why not use that on quick stock, use that up-hill pitch on quick stock? A. Just the reason I gave you, the water will run away from the wire.

XQ173. What do I mean by quick stock? A. You mean by quick stock that the water leaves it quick, we call it free, and you call it quick.

XQ174. Why can't you use that up-hill pitch with a free stock? A. Well, I can't explain it only as I did—if you have to drag that up-hill to the wire and the wire is running 525 feet a minute and your flow is lagging through the wire is dragging the bottom out of it, and you won't get any formation because the wire is going too fast.

XQ175. How would you put in this 3 inch pitch in these machines? A. We put in a 3 inch piece in under the breast roll, and then we dropped a little on the next leg, and a little on the next, and a little on the next until we got to scarcely nothing when we got to the shake.

XQ176. The suction boxes were not disturbed? A. The set screws there to raise or lower it any distance.

XQ177. Were those blocks wooden blocks or steel? A. Wood.

XQ178. Ever change them? A. Not to my knowledge.

XQ179. Well now, how much—you said that on the No. 8 machine it would come in at a little up-hill direction to the wire, didn't you? A. I don't remember saying that.

XQ180. Didn't you say that there was a little drop at the breast roll, that the breast roll was a little lower than the suction boxes when it was first set up? A. I don't remember that, we worked on that and after a while we found that it was a little lower on that end.

XQ181. How much lower? A. I don't know.

XQ182. A matter of a couple of inches? A. No, not a couple of inches, may have been half an inch or something like that, but it was not quite level.

XQ183. Now your lift of three inches under the breast roll would have raised the breast roll to the guide roll so that there was about 2½ inches— A. Not the guide roll, you don't mean

the guide roll.

XQ184. The what? A. The suction boxes.

XQ185. Were the suction boxes—the couch, that is, not any lower than the suction boxes? A. A trifle so.

XQ186. How much? A. Oh, half an inch, quite an incline to the roller.

XQ187. But the guide roll itself is just as high up as the suction boxes? A. Well, there is another roll between the guide roll and the suction box, a carrying roll, but if the guide roll is not quite as high as the suction box—we are always careful that the wire should work close to the suction box so no water could get under.

XQ188. Ever have the wire leave the suction box? A. I think not, in fact I say no.

XQ189. Did you ever try it? A. No, but I do know that you can't, the heft of the paper will put it down.

XQ190. How do you know, if you never tried it? A. I know that the heft of the paper will get it down—after the suction box grabs it it won't get away from it very quick.

XQ191. Will it be a little difficult to start up the machine under this condition? A. No.

XQ192. Doesn't the heft of the paper coming on—before the heft of the paper comes on— A. The heft comes right on, you open up and on comes your paper.

XQ193. When did you see this machine last? A. Eleven years ago.

XQ194. 1906? A. Yes.

XQ195. When you left? A. Yes.

XQ196. How did you happen to leave there? A. Well, there was a little dissatisfaction and I left.

XQ197. Dissatisfaction with you? A. Well with both of us, perhaps, we didn't think just alike.

XQ198. Who was the other party to the dissatisfaction, the International Paper Company? A. Yes.

XQ199. In other words to put the matter plainly, you were discharged? A. No, sir.

XQ200. Where did you go after you left there? A. Norwood.

XQ201. What was your job at Norwood? A. Superintendent.

XQ202. What was the factory at Norwood? A. Paper mill.

XQ203. What mill? A. Well, it was—I don't know exactly the name of the mill, but there was three or four stockholders, the man I worked for was Weed.

XQ204. You don't remember the name of the company that run that mill? A. Outterson—I don't remember the name.

XQ205. You have not a very good memory? A. I never had any occasion to condemn it, I can't remember names worth a penny, I can tell you that.

XQ206. How long were you there? A. A year.

XQ207. Superintendent all the time? A. Yes, sir.

XQ208. Why did you leave there? A. About the same misunderstanding with myself and Weed; he was leaving and I didn't like the party who was to take his place and we left together.

XQ209. Then you gave up the paper business? A. Yes.

XQ210. Been in Norwood since then? A. No.

XQ211. When did you leave Norwood? A. In 1907.

XQ212. Was it the Norwood Paper Company you were working for? A. Perhaps it was the Norwood Paper Company.

XQ213. That is as near as you can come to it? A. Yes.

XQ214. Who was the manager at the time you were there? A. I don't—Lewthwaite.

XQ215. What Lewthwaite? A. What Lewthwaite?

XQ216. What is his name? A. Chett—Chester Lewthwaite.

XQ217. Now, when you went there, in what part of the year 1906 was it? A. In August I think.

XQ218. You stayed until what part of the year 1907? A. I think it was in May I came away from there.

XQ219. 1907? A. Yes.

XQ220. And while you were there did they put any pitches on those machines? A. No.

XQ221. How many machines were there? A. One.

XQ222. Was it running flat? A. I don't know.

XQ223. How about No. 2? A. No. 2 what?

XQ224. You say there were two machines? A. No, one.

XQ225. You don't know whether it was running flat or not? A. I don't.

XQ226. You were there a year? A. I was there from August to May.

XQ227. And you were superintendent? A. Yes, sir.

XQ228. Is not that rather extraordinary? A. No, I don't think so.

XQ229. Have you talked with anybody about this pitch before testifying? A. Today?

XQ230. Yes. A. Why, I had a little talk with Mike Argy.

XQ231. When did you talk with Mike Argy? A. I should say about a minute or two minutes.

XQ232. When? A. This morning.

XQ233. Before he testified? A. Yes.

XQ234. He the only one you have talked with about it?

A. Yes.

XQ235. I saw you at breakfast with Mr. Moore this morning? A. Yes.

XQ236. I saw you lunching with Mr. Paul and Mr. Moore? A. They don't know—

XQ237. Have you talked with Mr. Paul and Mr. Moore? A. They don't know anything about paper making.

XQ238. You mean you never told them anything about this pitch? A. No, I told them—what did I—what was we talking about—well, I can't remember, but we talked something about the pitch, but I can't remember just what I told them, but they can hardly understand what I mean, just as I am telling you about forming the sheet on the wire.

XQ239. You can't blame me very much for not understanding then? A. I don't know but you understand what I am saying.

XQ240. But won't you try to think if anything was said today about this pitch to these gentlemen? A. Talked with nobody today about a pitch; talked with Mike Argy and asked him if he remembered it, and he said he did, and he says "don't you" and I said sure.

XQ241. Have you ever talked with Mr. Paul about that pitch? A. Never in my life, never saw Mr. Paul until this morning.

XQ242. You didn't mention it to Mike Argy after he got through testifying this morning? A. Yes, sir.

XQ243. Asked him what he testified? A. No, I says—what did they do to you keeping you in there so long, he says—you will find out, and that is all the information I got out of him—no, he says—there is something else, he says you want to know what you are talking about, and I think I do.

XQ244. Tell us please the widths of these wires on the Palmer's Falls machines, take one at a time? A. Now I told you—that is a little thing that I can't hardly remember, but as near as I do—No. 1 was 72 inch wire, we called this a 72 inch machine; No. 2 a 64; No. 3 a 108; 4 a 84; 5 a 80; 6 a 80; 7 a 120; 8 a 88 and 9 was 148; these are the names that were there when I was there but they have changed the names since, they put in two more machines and they changed the names.

XQ245. How do you know they put in two more machines? A. Because I heard they did, they were getting it ready to put it in when I left there.

XQ246. What was the length of the wires of these several machines? A. You have got me there, I can't tell you exactly about them, they were different lengths on the different sizes, I would not attempt to answer it because I cannot get it right,

only 8 and 9 because these were the machines our attention was attracted to, these machines, they were new and right up-to-date, the other machines were older machines, run there for years, didn't pay much attention to them.

XQ247. How many presses on these different machines? A. Two presses on all the machines except the 8 and 9.

XQ248. How many on 8 and 9? A. Three.

XQ249. How many driers? A. Twenty-eight on these two machines.

XQ250. Which two machines? A. No. 8 and 9.

XQ251. How many on the others? A. Well, now, I kind of forget about the others, I—if I am not awful mistaken, there was 21 or 22 driers on the other machines.

XQ252. What did you suppose you were going to testify to when you came here today? A. I don't know, I can't tell you.

XQ253. It was a mystery to you? A. It was a mystery to me what I was going to be cross questioned on, I don't know anything about any machines, only about the pitch, that I recall very well and very distinctly on that.

XQ254. You knew that you were going to be asked about the pitch? A. Yes, I knew that.

XQ255. How did you know that? A. How did I know that?

XQ256. Yes. A. Well, I was asked if I worked at Palmer's Falls and I said I did.

XQ257. Who asked you? A. Mr. Moore.

XQ258. When? A. About—must have been about two weeks ago.

XQ259. How long have you been in Buffalo? A. I wonder what time it is—I will tell you—I got here at seven o'clock this morning.

XQ260. Have you mentioned all the places where you were in paper mills? A. I think I did.

XQ261. Mr. Cunningham, where did you start in? A. I started—

XQ262. At Mechanicsville? A. No, I started in Troy, a mere boy.

XQ263. What mill? A. Orrs.

XQ264. Where next? A. Mechanicsville.

XQ265. New York? A. Yes, sir.

XQ266. When did you go there? A. Can't tell you when I did, I worked about a year at Troy.

XQ267. You were there only a very short time? A. About a year.

XQ268. Mechanicsville next? A. About a year.

XQ269. That was about forty years ago? A. I think it

was.

XQ270. After you left Mechanicsville where did you go? A. Malone.

XQ271. What mill there? A. The Malone Paper Company.

XQ272. How long did you stay at Malone? A. One year.

XQ273. Where did you go from there? A. Old Forge.

XQ274. How long there? A. Upwards of a year.

XQ275. Then where? A. Ticonderoga.

XQ276. How long did you stay at Ticonderoga? A. Upward of four or five years, somewhere along there.

XQ277. When did you leave Ticonderoga? A. I left Ticonderoga in 1890.

XQ278. Where did you go after that? A. Palmer's Falls.

XQ279. Were you at Palmer's Falls continually from 1890 to 1906? A. Yes, sir.

XQ280. Who run the mill at Palmer's Falls? A. When I went there Mr. Riley was the superintendent.

XQ281. No, who owned it? A. Well, it was the Hudson River Pulp & Paper Company.

XQ282. Did it change ownership while you were there? A. Yes, sir.

XQ283. Who owned it? A. Taken over by the International Paper Company.

XQ284. You said that you were the boss machine tender at the time this blocking was put in under the breast roll of these No. 8 and 9 machines? A. Yes, sir.

XQ285. The day boss machine boss? A. Tender.

XQ286. Tender—boss machine tender? A. Yes, sir.

XQ287. How long were you machine tender at Palmer's Falls? A. In the neighborhood of two or three months.

XQ288. What machine did you work on? A. No. 2 when I first went there, and then on No. 6.

XQ289. What did you become then? A. Then I became night boss.

XQ290. How long were you night boss? A. I can't just remember how long I was night boss.

XQ291. About how long? A. Five or six months, something like that.

XQ292. Then you became tender, boss machine tender? A. Yes, sir.

XQ293. How long were you tender, boss machine tender? A. I stayed tour boss, machine tender, six or seven years, something like that.

XQ294. Then you became night foreman? A. Then I became night foreman again.

XQ295. How long night foreman? A. I think I was there

eight or nine months, something like that, can't remember.

XQ296. When did you become superintendent? A. In 1902, between 1901 and 1902.

XQ297. How long after these machines came in, No. 8 and 9, was this blocking put in under the breast roll? A. Oh, I think that they were in there upwards of a year.

XQ298. What speed did they run at then, before that blocking was put in? A. Various speeds.

XQ299. Well? A. Tried to run them fast, tried to run them 500, then slower, and then up to 500 again, the speeds would vary, sometime have quite a little trouble with it.

XQ300. Upon whose suggestion was that wire, was that blocking put in, Mr. William Argy's? A. Yes, sir.

XQ301. What was Mr. William Argy at that time? A. He was the general superintendent.

XQ302. You told us all that you remember of the conversation that you had with Mr. Argy about this matter of the pitch? A. Yes, sir.

XQ303. I noticed when you were asked by Mr. Paul what the extent of that blocking was you said *I* think it was 3 inches, emphasizing the *I*, why did you happen to put it that way? A. I cannot tell you why I should say *I* any more than I said I thought it was 3 inches, I think it was 3 inches, I know it was not less, I—it is quite a while ago, you know, and I don't consider that I have got to reproach my memory if I can not remember that easy, I do remember very distinctly about the blocking of that wire.

XQ304. You mean you do not mean to purport to say it was as much as 3 inches, it may have been less? A. I would almost say it was more than 3 inches because 3 inches is a mite to raise in such a length.

XQ305. The 3 inches don't amount to anything? A. Oh, yes, 3 inches is a lot.

XQ306. What do you mean by saying it is a mite? A. For such a travel from the suction boxes to the breast roll, I really think it was more than 3 inches.

XQ307. Now come back to my original question, you said, *I* think it was 3 inches, instead of saying, I think it was three inches, why put the "I"— A. I don't think that I did.

XQ308. You say *I* think it was 3 inches.

Mr. Paul: I don't think he put any emphasis on the "I." A. It may be my way of speaking—I think it was 3 inches.

XQ309. Did somebody suggest to you that it was less than 3 inches? A. No.

XQ310. You have not heard from Mr. Argy that it was 2½ inches? A. No, sir.

XQ311. No one had told you that Mr. Argy said it was 2½ inches? A. No, absolutely.

XQ312. Did Argy or anyone else tell you that he testified that it was less than 3 inches? A. No, sir.

XQ313. How much you going to be paid for your testimony? A. My expenses.

XQ314. Nothing else? A. No, sir.

XQ315. How did this straightening out of the fibers that you told about take place? A. How did they take place?

XQ316. What caused it? A. Well, the only way that I could tell you is just the way that I did tell you, the speed of the wire in under with the sluggish fibers on top would straighten out instead of mingling together, instead of mingling them straighten them out, that is practically straight, would straighten them out more.

XQ317. You think you would be able to observe a 2-inch pitch or a 3-inch pitch on a wire, is it noticeable to one going through a mill? A. Yes, I would.

XQ318. Any one familiar would notice? A. Yes, I would, if I was looking for it of course.

XQ319. What was the speed at which you run at Norwood? A. 400 to 425; 400 more successfully.

XQ320. You didn't put that same pitch in these Norwood machines? A. Didn't have the driers to dry the paper.

XQ321. How many driers did you have? A. Twenty-one.

XQ322. What was their size? A. Three feet.

XQ323. Thirty-six inches? A. Yes, 36 inches, 3 feet across, no they were 4 feet.

XQ324. How many were there? A. Twenty-one.

XQ325. Are you willing to go on record as saying to the court that it is customary to have the guide rolls lower than the suction boxes in paper mills? A. No, that is not practical, but as I say—paper makers—we want to be sure that the guide roll is not higher than the suction boxes, and the suction boxes are raised and lowered, every time they are putting in a wire they have to take out the suction boxes and when they put them in they raise them, there is times when I have known that suction to be ½ inch higher than the guide roll, and again it would be level with the guide roll, there is a dandy on that roll you know.

XQ326. What was Mr. Michael Argy's job at the mill at the time of this pitch? A. He was assistant superintendent while his father was there, and for one year after his father left he was super.

Mr. Paul: I suppose you mean superintendent? A. Yes, sir.

XQ327. Was it possible to carry as much head behind the slice as 7½ inches? A. Yes, it is possible but it would be right to the top of the slice, I think the walls were 7 inches high.

XQ328. On these machines? A. On these I think it would be right to the top of the slice.

XQ329. To the top of the slice? A. Yes, sir.

Mr. Lyman: That is all.

Mr. Paul: That is all, Mr. Cunningham.

Mr. Lyman:

XQ330. Was the mill in which you were superintendent at Norwood the mill owned or controlled by the Remington-Martin Company? A. Yes.

Signature waived.

EDWARD M. BOWMAN,

a witness called on behalf of the defendant, being first duly sworn, deposes and says, in answer to questions by Mr. Paul, as follows:

Q1. What is your name? A. Edward M. Bowman.

Q2. Where do you live? A. 517 Eleventh street, Niagara Falls.

Q3. What is your occupation? A. At present I am with the chemical company down there.

Q4. What name? A. Niagara Alkali Company.

Q5. What is your position? A. Am in the store room, part time nights.

Q6. Have you ever had any experience in paper mills? A. About thirty-five years.

Q7. When and where did you start? A. I started at Twin Falls.

Q8. What year was that? A. I was 18 years old—1881—82, I was 18 years old and I know that I am 54 now.

Q9. Now will you state briefly the places or mills where you worked, beginning with the mill at Twin Falls? A. I worked in Twin Falls two years, then I was about six months at Conowingo, Md., then I went to Berlin, N. H., at that time they called it the Glenn Paper Company, later became the Berlin mill of the International, I was there about little over a year; then I went to Wilder, Vt., Olcott Falls Paper Company at that time, now the International, six years there; then I went to Niagara Falls, I was there two and a half years for the Niagara Falls Paper Company before the International was dreamed of; then I went to Kimberly & Clark Company of Neenah, Wis., three years I was with them; then I came back to Niagara Falls with the International Paper Company, I was

with them nine and a half years.

Q10. What was the year that you came back from Neenah, Wis., to the Niagara Falls? A. 1899.

Q11. And you were there until what time? A. 1909.

Q12. What was your work in these various mills? A. Well, at Old Forge mill and Niagara Falls I was superintendent.

Q13. Did you have practical experience in running paper mills? A. Yes, the other mills was where I started in.

Q14. What did you do in the mills? A. Well, first job I had in the mill was roustabout, all over the mill for a little while, then I went on the paper mills as back tender and then run machine, then I was boss machine tender; I went to the Old Forge mill as machine tender; boss machine tender, and then as superintendent in the same mill, and I went from there to Niagara Falls.

Q15. And your position at Neenah? A. Superintendent.

Q16. And then you came back to Niagara Falls as superintendent? A. Yes.

Q17. What types of machines were these in these various mills? A. Fourdriniers.

Q18. What kind of paper? A. Print.

Q19. All of these? A. All prints, yes.

Mr. Lyman: By that you mean news? A. News, yes.

Q20. How many machines were employed in the Niagara Falls mills when you came there in 1899? A. Six.

Q21. What was the position of the wires in these six machines when you came back there in 1899?

Mr. Lyman: This question is objected to as not relating to any matter of defense set up in the answer, and it is stipulated that the same objection may be taken to all questions along these same lines.

Mr. Paul: Now you may answer—What was the position of the wires in these machines?

A. They were up-hill about ¾ top of guide roll, or ¾ of inch higher than the top of the breast roll.

Q22. What had been the arrangement in the machines that you had used prior to that time? A. They had always been that way.

Q23. What was the condition as to the adjustability of any of these machines? A. They all had slight adjustments, that is you could bring them up level if you wanted to, slots in the frame.

Q24. Any of them in which you could carry above the level? A. No.

Q25. What had been the general practice in operating these

machines, had they been operated on the level or below the level? A. Below the level, any machine.

Q26. What were the machines you had at Kimberly? A. When I first went there they were up-hill about an inch, when I first went there.

Q27. Any change made while you were there? A. The next year we put in two new Fourdrinier parts.

Q28. How were they arranged? A. They were arranged level.

Q29. Were they running that way? A. After we started them, yes, never changed while I was there.

Q30. What became of that mill? A. After I left there in 1899, summer of 1900 it burned down.

Q31. Burned down after you left there? A. Yes, sir.

Q32. Was running up to the time you left? A. Yes.

Q33. What if anything was done by you in reference to changing the pitch of the wires in the machines at Niagara Falls after you came back in 1899? A. I think it was in 1901 I raised them up 2½ inches above the level.

Q34. That gave what difference between the height of the top of the breast roll to the top of the guide roll? A. Just 2½ inches.

Q35. How did you get this raise? A. Blocked them up with blocks of wood under the standard.

Q36. What was the shape of these blocks of wood? A. They was about four by eight.

Q37. How did you arrange to get the difference in height between the top of the breast roll and the guide roll? A. Under the different supports, of course the one nearest the breast roll was raised more than the intermediate ones and we had to make a graduation block to get the difference.

Q38. What was the shape of that block? A. Just the difference in height, if they was the last ones the next would be a trifle up-hill, like a pair of stairs, the feet of the stand had to stay level same as in the first place.

Q39. Now what about the suction boxes, were they raised also? A. They were raised so that the wire was level from the top of the breast roll to the top of the guide roll.

Q40. What do you mean by level? A. It don't run down-hill, and run so that there would be no sagging in it.

Q41. The breast roll was 2½ inches higher than the guide roll and the suction boxes were raised correspondingly? A. Whatever amount it took yes.

Q42. And did that give you a straight line from the top of the breast roll to the top of the guide roll? A. Yes.

Q43. Will you explain how you came to make that change, and what your idea was, what you did it for? A. Up to that time it had always been on slow speed, that is slow 300 or 325 feet, 350—slow speed and they wanted fast speed, faster, 400 or 450, something like that at that time and I tried the machine, one of the machines, I think our No. 4 we called it, I think I put that up to about 450 feet if I remember right, and I found that the wire run so much faster than the stock that I could not make as much paper as before.

Q44. At what speed before? A. About 375, as I recall now.

Q45. Now you can go on? A. So after we worked a while and I see it would not go on that account, I had too many breaks, I put it back at the speed it was run before, at that time, 1896, I tried that, and after I come back to the mill in 1901 I tried it again by starting to raise the wire up 2½ inches and the machine I raised it on first was running around 450 and 460 feet, and I raised this one machine first 2½, we found that we could have the stock travel better on the wire with a little less water and I let it go at that, raised the other machines some more, or the same amount, because it was a proposition that we were feeling our way on, you might say.

Q46. How many of the machines did you raise? A. Five.

Q47. All of the machines that were in the mill? A. No, there were six.

Q48. And you raised five of them at that time? A. Yes.

Q49. Now what speed did you run these machines at after you raised them? A. Between 450 and 60 feet, that is on one machine, that is No. 6, No. 4 we could only run about 400 feet on account of power, could not run it any faster if we wanted to.

Q50. How certain are you as to the amount that these machines were raised, did you ever measure it? A. Oh, yes, I measured it, after they were raised I measured to determine just the amount of the raise of the wire.

Q51. What did you find as to the effect of the raising of the wire in this way, in the operation of the machine? A. We found that the wire did not run away from the stock so fast, that the stock traveled nearer the same speed as the wire than it did before.

Q52. What result did you have? A. Well, we was running with less breaks, and the work was much better.

Q53. And how about your formation? A. Well, the formation was about the same, we had to make that class of paper.

Q54. Were you making a pretty good class of paper? A. Yes.

Q55. Was that known as news print paper? A. Yes, a bet-

ter grade.

Q56. How long did you run these machines with this 2½ inch blocking? A. It was either 1903 or 4, not just clear on the year, it was one of these two.

Q57. Then what did you do? A. We raised them all to 6 inches.

Q58. How many of the machines did you raise? A. Raised five.

Q59. Same machines? A. Same ones, yes.

Q60. What about the speed? A. We maintained the same speed.

Q61. You didn't increase the speed any when you raised them 6 inches? A. Not at that time.

Q62. How long did you run the machines with this 6 inch blocking? A. 1906.

Q63. Then what did you do? A. Raised them up to 10 inches.

Q64. What about the speed? A. Well, I believe was two machines, 5 and 6, that we put up to 490.

Q65. At that time? A. Yes.

Q66. And the others? A. The others were up to their limit on account of power.

Q67. So that you run the other machines with 10 inch blocking at the same speed that you did with the 2½ inch blocking? A. Yes, sir.

Q68. Now was there any further change in the blocking while you remained there at that mill? A. No.

Q69. And further change in the speed? A. No.

Q70. What was the highest speed at which you run any of the machines, or tested out any of the machines when they had the 2½ inch blocking? A. 490.

Q71. And how did they operate at 490? A. All right.

Q72. How much were they run at 490 with the 2½ inch blocking? A. How much were they run?

Q73. Yes. A. You mean in time?

Q74. Yes, what portion of the time did you run them at 490? A. We kept them practically all the time at that speed.

Q75. At 490? A. Yes.

Q76. With the 2½ inch blocking? A. Yes.

Q77. How soon did you increase up to 490? A. Not just sure, it was the latter part of 1901, after I raised No. 6 that I put it up there.

Mr. Lyman: Up to where?

A. To 490.

Q78. Then what did you find as to the capacity for speed

with the blocking as compared with the capacity for speed without the blocking, could you run the machine faster after you had it blocked? A. Just the difference between 460, we was running 460 before they were blocked, we were doubling up the quantity of the paper we made on some orders, with different orders the speed was changed accordingly.

Q79. What did you find as to this running of the wire away from the pulp after you made the change, what did you find as to the effect of that? A. It was not so noticeable as it was before.

Q80. What was the length of the wire on these machines? A. Sixty feet.

Q81. All the same? A. All the same.

Q82. What was the width of the machines, do you remember? A. Five of them were 120 inches, one 136.

Q83. You know J. A. Devine? A. Yes.

Q84. Where did you know him? A. Niagara Falls.

Q85. What did he do there? A. Well, he started in back tender at one machine, he worked there under me for—let me see—I think he was there all the nine and a half years I was there, pretty close to it.

Mr. Paul: That is all, you may cross examine.

CROSS EXAMINATION.

By Mr. Lyman:

XQ86. What make of machines were these at Niagara Falls? A. There was two made by Bagley & Sewall of Watertown, New York, Bagley & Sewall Machine Company.

XQ87. Which numbers? A. Wait a minute, two of them was built over by them, was all originally J. H. Horne of Lawrence, Nos. 3 and 4 was originally cylinder machines and they were put in the mill in 19—started in the fall of 1903, and after it run for a while it was arranged as a cylinder machine but built over by Bagley & Sewall of Watertown, New York, and they furnished the Fourdrinier parts, and some of the driers, frames, etc., turned them into two Fourdrinier machines.

XQ88. Both Nos. 3 and 4 were rebuilt that way? A. Yes.

XQ89. At the same time? A. Yes.

XQ90. And that was when? A. 1895, fall of 1895.

XQ91. You mean the fall of 1905, don't you? A. No.

XQ92. When did you go there? A. 1894.

XQ93. You were there first in 1894? A. Yes.

XQ94. How long were you there that time? A. Two years and a half.

XQ95. Left there in 1896? A. Yes, back in 1899.

XQ96. That was the same mill, practically, but when you

were there it was called the Niagara Falls Paper Company and when you came back it had been taken over by the International Paper Company? A. Yes.

XQ97. There were six machines when you were there first? A. No, four first.

XQ98. Which machines were *there when you went there* originally? A. One and two and after we changed over the cylinders three and four, four machines.

XQ99. When were five and six built? A. Believe started in operation in the spring of 1897.

XQ100. Were you there when they started? A. No, I left in September of 1896.

XQ101. Were any new machines constructed while you were there in your second period of service with them? A. No, sir.

XQ102. Nine and one-half years you say? A. Yes.

XQ103. Any change made in those machines in any other respects than those you have mentioned? A. No.

XQ104. Now take the No. 1 machine, what was the width of that wire? A. 136 inches.

XQ105. You say the length of the wires was what? A. Sixty feet.

XQ106. What was the speed the No. 1 run when it was flat? A. When I first went there, or the second time?

XQ107. When you first went there? A. About 375.

XQ108. What speed was it running when you went there the second time? A. About 425.

XQ109. Was it running at that speed regularly, or is that an extreme? A. Oh, it is as I say—we varied the speed at times.

XQ110. Why did you vary the speed? A. Because the quality of the stock required we should do it; change quality of paper vary the speed.

XQ111. So you— A. You can make a better finish, a better formation in this way, by slowing the machine down a little.

XQ112. Better formation by slowing it down? A. Yes.

XQ113. You were looking for good formation, were you not? A. Always, yes.

XQ114. How did it happen that you varied the speed then? A. Sometimes we wanted specially heavy.

XQ115. Well for a heavy sheet? A. Slow for heavy sheet.

XQ116. What were the limits at which that machine varied when it run flat, run with the wire flat? A. I think we could get down to 80 feet a minute and from that up to 375 or 80.

XQ117. You said a minute ago, that it got as high as 425

when you got back there? A. That was the feed—

XQ118. You said when you got back there in 1899—you wish to correct that? A. You see while I was away that machine was all built over, that is how they got the speed.

XQ119. I am simply getting at what your testimony is, you said at the time you got back there the second time, in 1899, it was running at 425 feet? A. What did I say it was running at?

XQ120. You said 425 feet. A. I think that is right.

XQ121. Well then it run flat all the way from 80 to 425? A. We never get down to 80 unless just when we make heavy wrappers.

XQ122. Where for news? A. Up around these speeds.

XQ123. About 425? A. Yes, sir; you asked if any changes made on the machine, changes of the drives was made.

XQ124. When? A. I think in 1900 or early in 1901, the step pulleys was all discarded and we put in a direct drive right from the engine to the back lines.

XQ125. What was the speed at which the No. 1 run after it got that 2½ inch block under the breast roll end? A. I think about 450.

XQ126. Well, please tell me whether you feel sure about that, I don't want mere guessing? A. As I say we run different speeds, of course I was giving as near as I could about what I know.

XQ127. Would make, you say you could average about 450 feet? A. As near as I can recall.

XQ128. Can you bank on your recollection, or should we have some records? A. I think you can bank on it, if you need—

XQ129. Was there any difference in the speed after you put in that 2½ inch pitch as far as the No. 1 machine was concerned? A. I don't think there was, I am not very clear on that one machine.

XQ130. Now, referring still to that same machine, was there any difference in the speed in which it run after the 6-inch blocking was put under it? A. No.

XQ131. Now taking the No. 2 machine, what was the width of that wire? A. 120 inches.

XQ132. And what was the speed at which that machine run when it was flat, when the wire was flat? A. About 400.

XQ133. That too varied in accordance with the paper you were making? A. Yes.

XQ134. Was there any change in the speed on that machine after your 2½ inch block was put in? A. The best we ever run that machine was about 475, between that and 475,

perhaps this will clear it up a little—No. 1, 2, 3 and 4 were practically up to their limit of speed on account of the small size of the engine we had to drive, and the only machines we could speed up, where we had power, were 5 and 6, so these were the two machines I watched, was no matter what we did with these others.

XQ135. Nos. 1, 2 and 3 didn't run at any higher speeds after they had had the 2½ inch of blocking under them than they did before? A. The highest we could run them was 475 feet.

XQ136. They were at that and had been at that with the wires level? A. Yes.

XQ137. What was the width of the wire on the No. 3? A. Nos. 3, 4, 5 and 6 were all 120 inches.

XQ138. Same as No. 2? A. Yes.

XQ139. What was the speed at which No. 5 was running when the wires were flat, when you got back there in 1899? A. About 460 feet.

XQ140. That speed sometimes varied too? A. Not so much as the other machines because we omitted the making of cheaper grades on these 5 and 6 machines.

XQ141. Well, 460 was about the average with the wire level, sometimes you get up to a higher figure than that with the wires level on the No. 5? A. I believe they were tried for a short time.

XQ142. Well, how high did you try them with the wire level? A. We did try 500 feet.

XQ143. Would it work? A. No.

XQ144. What was the average speed on No. 6 with the wire level? A. No. 5 and 6 always run just the same speed on account of rivalry of the men on the machines.

XQ145. Now what was the speed at which No. 5 run after the 10 inch pitch was put in there? A. We kept them 490.

XQ146. How much was the speed at which it was run after the 6 inch pitch was put in? A. It was run between 460 and 490, we tried of course—the thing always was to get more.

XQ147. Always trying to get as much speed as you could? A. Yes.

XQ148. How much was the speed when the 2½ inch block was in? A. We run up No. 6 up to—

XQ149. Talking about No. 5? A. Just the same, she kept at 490, 2, 6 and 10 inch.

XQ150. There was no substantial change in these machines whether they had level wire or 2, 6 or 10 inch blocking? A. No, there was no big change.

XQ151. There was no substantial change? A. Not in speed.

XQ152. That is true of both the 5 and 6? A. Yes.

XQ153. When you left there in 1909 what was the speeds? A. Just the same, I left them just like that.

XQ154. How did you happen to put in the 6 inch pitch on these machines? A. Well, trying to improve, and then at that time there was a considerable talk around the country, other people was raising the wires, and have heard them say they would be higher than we were, higher than I thought it advisable to go, that way I got it by stages.

XQ155. How high did you happen to hear? A. Fifteen inches.

XQ156. Where did you hear that they had it up 15 inches? A. Eastern Mills.

XQ157. At the Eastern Mills. A. Up around Otis Falls, around Berlin—quite a number of the eastern mills.

XQ158. Did you say Otis Falls? A. Yes, men come in and tell you what is going along.

XQ159. What mill at Otis Falls? A. International mills.

XQ160. What mill at Berlin, Mass., were they speaking about? A. Berlin Mills Company, Gorham; there was the St. Croix that was up to 21, and if they could go up to 21 I could go to 10.

XQ161. You tried 6 first? A. Yes.

XQ162. You didn't dare try 10 inches—you had tried 10 inches? A. Yes, sir.

XQ163. Did you hear anything about the Rhinelander in this connection? A. Never heard about it then.

XQ164. Your information didn't mention Eibel? A. Never heard of Eibel at that time.

XQ165. At that time? A. No.

XQ166. Had you seen these high pitches at any of these other mills at Berlin or Otis? A. No, just what I was hearing.

XQ167. Do you remember who told you about this? A. No, I could not remember about that now.

XQ168. You don't purport to fix accurately the date when you put in that 6 inch pitch? A. I could not.

XQ169. If we could find out when these mills of the Berlin Paper Company at Gorham put in their pitch you would know it was shortly after that? A. I know—as far as I know about it, I put it on in the year I say it was, I am not positive as to the date.

XQ170. It was after the Berlin mills had put their pitch in? A. I could not say as to that.

XQ171. It was after that? A. We went up to the high pitch—they was talking about it this time, that is the 10 inch

pitch—just what occurred about the 6 inch, I know it was the year, whether it was hearsay that caused it I don't recall.

XQ172. What did cause it if it was not hearsay? A. Our own trying.

XQ173. Well, but you said a moment ago that you put—you started in at easy stages, and that was before you had heard— A. When I first started in I never had heard about it.

XQ174. When the 6 inch pitch was put in you said that was because of information you got through paper makers as to mills in the East? A. I say about that time rumors came around to that effect.

XQ175. About the Berlin mills and the Otis mills? A. As I recall.

XQ176. These reports led you to start in on your 6 inch pitch? A. I speeded the machine up and tried it myself, yes.

XQ177. Do you mean to say that you have never to this day heard of Eibel? A. I have heard of Eibel, when I was raising I never heard of Eibel, sometime after the patent came out I saw it in the news trade papers.

XQ178. Was the Eibel patent a good deal discussed? A. Never heard it discussed very much.

XQ179. Do you know whether the International Paper Company took a license under the Eibel patent? A. Not since I was working with them, have not been in their mills since 1909, I don't know what the International has done.

XQ180. You have not been in the mills since 1909? A. No.

XQ181. Have you been in the paper business since you left them in 1909? A. Some extent, yes.

XQ182. What have you done since you left them in 1909? A. Two years in Brooklyn, Tidewater Paper Mills, DeGrasse.

XQ183. What two years was that? A. 1911-1912, I believe.

XQ184. Was there an interval between the time you left the International and the time you went to the Tidewater? A. Some of the time I didn't do anything.

XQ185. What was the business you did? A. One summer, I think summer of 1910, let's see 1909—summer of 1910 kept time on big contract job, Niagara Falls, all summer.

XQ186. Were you with the Tidewater right after that? A. I went down in February, 1911.

XQ187. Were there about two years? A. Left in December, 1912.

XQ188. The DeGrasse Paper Company, when did you start in there? A. December, 1912.

XQ189. How long did you stay with DeGrasse? A. October,

1913.

XQ190. And after that? A. Next I guess the Tidewater, I left DeGrasse—I went over to Ireland and England, was there four months in the paper business.

XQ191. What was that year? A. I got back here a year ago last March.

XQ192. March, 1916? A. Yes, I started in working with the Tidewater—

XQ193. How long in the present job? A. Since last October.

XQ194. Just before that you were in England and Ireland? A. I was in England, I got back in March, 1916, I went over in October, 1915.

XQ195. Between March, 1916, and October, 1916, last year? A. I didn't do anything much.

XQ196. Now you went to England when? A. October, 1915.

XQ197. You left DeGrass to go to England? A. Yes.

XQ198. You left DeGrass in October, 1915? A. Yes.

XQ199. When did you go to DeGrasse? A. December, 1914, February, 1912, I was at Tidewater.

XQ200. You went to DeGrasse in December, 1914, you were at Tidewater two years, you must have gone to Tidewater if it was in February, in February, 1913? A. Yes.

XQ201. That leaves a space of four years between the date when you left the International in 1909 and the date when you went to Tidewater in February, 1913, what about that four years? A. I worked a little while for the International in the fall of 1909 at their Franklin mill, I was there four months, the summer on that contract job, some of the time I didn't do anything, didn't have a job.

XQ202. You didn't work anywhere else except these places you have named? A. I was a little while at Kalamazoo, Mich.

XQ203. What mill there? A. King Paper Company.

XQ204. Where else? A. That is all.

XQ205. Where is the Franklin Mill of the International? A. Franklin Falls, New Hampshire.

XQ206. Did the King Paper Company operate its wires with a pitch? A. They make book—book no print at all at Kalamazoo, no print at all.

XQ207. How about the Franklin Mill? A. Their wire was up on one machine only, they had three machines, one made railroad manilla, one made news, and the other No. 2 book.

XQ208. And the news machine was pitched? A. Yes.

XQ209. How much was the pitch there? A. My recollection is 6 or 7 inches.

XQ210. High pitch then? A. About 6 or 7 inches as I recall.

XQ211. You call that a high pitch? A. I did at one time.

XQ212. Do you now? A. Of course paper makers understand if there is any occasion, we understand having pitches—the pitch of the wire; whatever the pitch of your wire is we make the stock to fit it.

XQ213. What do you mean by saying at one time it was high? A. When we had no pitch at all, went 2 inches, and when I went over 2 inches to 6 inches I thought it was high.

XQ214. Which was an unheard of pitch, I mean something altogether out of reason? A. All the years I had been in business that was the first start of raising wires, I went at it gingerly.

XQ215. When you heard about this 15 inch pitch you wanted to be shown before you could believe that a machine could operate at that pitch? A. Yes, I had an idea to operate at that pitch they had awful slow stock, with our stock we could not do it.

XQ216. The trade was pretty generally pretty skeptical about running at such a pitch? A. Never heard much discussion, each mill mapped out their own route, and we always thought the other fellow was a—

XQ217. What was the pitch of the Tidewater? A. I believe it was 12 inches.

XQ218. How about the DeGrasse? A. Well, they had one machine without any pitch, they had two new machines there, one didn't have any pitch and the other had about I believe 6 or 7 inches, I think about 7 inches was the pitch of the other three machines, I never measured those, just by glance, you see.

XQ219. What was the reason for running this wire up-hill in these Niagara Falls machines, as they were when you first run them? A. The practice has been in vogue ever since Fourdrinier started 40 or 50 years ago.

XQ220. What was the theory of it? A. Well, of course, in those days we ran very much slower, when I first started at a mill 150 feet was fast speed, the theory of it was to have it run up-hill so the stock would not run faster than the wire, I have seen the stock run faster than the wire as far up as the suction boxes.

XQ221. The first blocking you say you put under there gave this machine 2½ inch pitch from breast roll to guide roll? A. Yes, sir.

XQ222. What was the size of blocks you used to give that pitch? A. About 2 inches, I think, the rest of with the frame.

XQ223. What with the frame, what do you mean? A. Slots in the frame.

XQ224. You could raise it about half an inch? A. You could not get it up here any, but you could get up to the level, about one inch down here.

XQ225. If you had a 2 inch block under it, how could you get an additional half inch by that slot? A. You could bring it up that much if it was to the bottom.

XQ226. With the machines resting upon the floor you could not get the breast roll above the level? A. You could not get the wire, the table wire.

XQ227. You could not get the wire in a position where it was running down-hill? A. Yes, sir.

XQ228. Now, when you put the block under that, that had the effect of raising the machine 2 inches, the breast roll end of the machine 2 inches from the position it was in when it rested on the floor, and I don't see how you could get the breast roll raised 2½ inches above the level of the guide roll by merely putting a 2-inch block under the breast roll? A. Well, the table roll frame is hung in a slotted stand, now if that slot is 1 inch, and you are down pretty near the bottom of that slot you can come up ½ or ¾ inch before you get to the top, we could put it up to the level or down an inch, but we could not go above the level.

XQ229. You could not go above the level? A. Without blocks.

XQ230. Without blocks? A. No.

XQ231. Then could you get it above level more than the amount of the block which was 2 inches? A. You had 2½ inches and whatever the raise was, after we got done in actual measurement it was 2½.

XQ232. So you could not raise it above the level without any blocks? A. The slot was run from level—there is about four or five brackets on the side of the machine, back side and front side, you can raise the breast roll but the amount you can raise the roll is absolutely controlled by the table roll, the tube roll—breast roll—you could not raise your breast roll an inch, and your breast roll, the top of your breast roll must be in line with the top of your tube rolls, and we always had to make that adjustment as the rolls required.

XQ233. When you put in that 2 inch blocking under the breast roll end of the machine, did you raise the suction box end? A. Yes.

XQ234. Why did you do that? A. So as to have perfect line from the top of the breast roll to the top of the guide roll.

XQ235. Was it necessary to do that, or would it be sufficient to raise the shakes and let the suction boxes— A. You could not do it on these machines.

XQ236. Did they have a continuous rail? A. No, it had a short space between the breast roll and the suction box.

XQ237. On which machine did you first put in the 2½ inches? A. No. 6.

XQ238. When did you think it was you put that in? A. 1901.

XQ239. Was it an advantage to be able to use less water in your stock? A. Yes.

XQ240. Well, the result of your 2½ inch raise was that you could get along with less water in your stock because that went farther? A. Yes.

XQ241. And was that the real purpose of the blocking? A. Yes, the real purpose of the blocking was not to have the wire run away from the stock—that was the start of it.

XQ242. Well, the advantage was that it carried the water? A. Carried the water and kept up with the wire.

XQ243. What machine did Devine work on? A. No. 5.

XQ244. And he was there as long as you were? A. To the best of my recollection, he was there when I went there, and he was there when I left.

XQ245. All these machines in one room? A. No.

XQ246. How were they arranged? A. No. 1 and 2 was in a room by themselves, the other four were in one room, the arrangement was that the Fourdrinier end of 5 and 6 was just beyond the dry end of 3 and 4.

XQ247. Where is this factory located? A. In Niagara Falls?

XQ248. Yes. A. Buffalo avenue and 13th street.

XQ249. As you face the factory from the street on which hand is—the right or left of the room, No. 1 and 2? A. It would be at the left.

XQ250. In the right hand room there are three machines? A. Yes.

XQ251. And did I understand that 3 and 4 are nearest you when facing from the street? A. No.

XQ252. Further from you? A. Yes.

XQ263. Which is at the extreme right? A. No. 4 and 6.

XQ254. No. 4 being on the rear of 6? A. Yes.

XQ255. Now, if you were told that there was no pitch on these wires with the exception of No. 6 in 1907, would you deny

that was true? A. Certainly would.

XQ256. What was the head that you carried on the back of the slice of these various machines at Niagara Falls? A. As I recall from 3, 5 to 6 inches.

XQ257. You could not place it accurately? A. No. 1 we ran lower head than other, I think the slice is under 6 inches high, average around 4 inches, 3 to 4 inches.

XQ258. What is it that enables you to place the date when you put in this 2 inch blocking as 1901? A. Well, after I went back there in 1899 there was quite a big repair job going on, took a good part of the next year before we got done, after that year I commenced to feel for more production, to make up for it, that what started it.

XQ259. I am asking you how you fix the time as 1901? A. That is the way I fix it.

XQ260. I don't see that you fix it—how do you know it was not 1900? A. I was too busy in 1900 to bother.

XQ261. How do you know it was not 1902? A. Am pretty sure it was 1901.

XQ262. You have told me everything that enables you to place the date? A. I had a record, but didn't have any further use for it, and cleaned up and destroyed it, never thought it would come up or I would have any use for it.

XQ263. Take the date of this 6 inch pitch—was the 6 inch pitch gotten by blocking too? A. Yes, sir.

XQ264. What was the size of blocks for that? A. It was enough to give us 2½ inches, and adjust the rolls that would give us about 3½—

XQ265. That was— A. The 4 inch would have been enough to give us this 6 inches, it was not added on, new blocks were made, new blocks made the second time.

XQ266. How do you fix the date when that blocking was put in? A. Well, because the 10 inch was put in 1906, and the next 1903 or 4, I know I had three times of raising the rolls while I was there.

XQ267. And how do you know the 10 inch block was put in in 1906? A. The mechanic I had there left in the fall of 1906 and he done the job.

XQ268. Who was he? A. James.

XQ269. What was his first name? A. E. G. James.

XQ270. How do you know he left in the fall of 1906? A. Because I got a man to take his place by the name of Farnham the spring of 1907 and Farnham left in 1908, so he came in 1907.

XQ271. When was it that James left, he got there very late

in 1906— A. Farnham came in the spring of 1907, he left the next year, 1908.

XQ272. You know the 10 inch pitch was put in shortly before Farnham came and before James left? A. While James was there.

XQ273. James put them in all the machines? A. James done all that work.

XQ274. Under the legs of one of them? A. All of them.

XQ275. Now, have you any other method of fixing, any other reason for saying that the 6 inch pitch was put in in 1903 or 4 other than you know it was put in sometime before the 10 inch pitch was put in? A. I know we run something like 2 or 2½ years before the 10 inch.

XQ276. Would there be some records? A. I don't think—the only records I kept—I hunted high and low to find them but I could not find them.

XQ277. You have said that this 6 inch pitch was not taken out until the 10 inch pitch was put in? A. No.

XQ278. In any of the machines? A. No.

RE-DIRECT EXAMINATION.

By Mr. Paul:

RDQ279. I was not quite clear from your cross examination which blocking it was that you put in after hearing about the high pitch at Berlin, than the 6 inch or the 10 inch blocking? A. Six inch.

RDQ280. You had heard of the high pitch at Berlin Falls before you put in the 6? A. Yes.

RDQ281. At the Berlin mills? A. At the Berlin mills, at Gorham.

RDQ282. Had you heard of that blocking at other mills before you put in the 6 inch block? A. Yes, but I don't know just what mills.

RDQ283. Then if that blocking was not put in the Berlin mills until 1906 would you still say it was 1903 or 4 when you put in this 6 inch block? A. Yes.

RDQ284. But you are not quite clear as to whether you had heard of it at the Berlin mills before you put it in? A. Am not just clear, but we heard rumors along about that time.

RDQ285. You are not sure of the mills? A. Eastern mills, St. Croix and the Berlin mills, they were the extremists.

RDQ286. Did you hear of these extremes before you put in the 6 inch blocks? A. I would not swear to that, too far back and apt to get mixed up in your dates.

RDQ287. Had you not heard of the 6 inch blocking before you put in the 2½ inch? A. No.

RE-CROSS EXAMINATION.

By Mr. Lyman:

RXQ288. I wonder whether you happened to hear any discussion between Mr. Argy and Mr. Cunningham today about a pitch that they say was put into the mill of the International at Palmer's Falls? A. No, I didn't hear them discussing anything, they was talking about something else. I didn't pay particular attention to what they was saying.

Signature waived. Notary's certificate waived by stipulation of counsel.

DISTRICT COURT OF THE UNITED STATES,
DISTRICT OF MAINE.

EIBEL PROCESS COMPANY, Plaintiff,
vs.
MINNESOTA & ONTARIO POWER COMPANY, Defendant.
} In Equity, No. 769.

Depositions taken on behalf of the defendant in above entitled cause before Frederick M. Boyer, notary public, commencing on Tuesday, June 19, 1917, at 10 a. m., at the office of Frederick M. Boyer, 121 Washington street, Watertown, N. Y., pursuant to the stipulation and agreement of counsel.

Appearances: On behalf of plaintiff, Mr. Harrison F. Lyman. On behalf of defendant, Mr. A. C. Paul and Mr. M. M. Moore.

And thereupon the following proceedings were had:

WILLIAM F. HAZEL,

sworn in behalf of defendant:

By Mr. Paul:

Q1. What is your name? A. William F. Hazel.

Q2. Where do you reside? A. At Deferiet, N. Y.

Q3. How far is that from Watertown? A. Fourteen miles.

Q4. How old are you, Mr. Hazel? A. Forty-three.

Q5. What is your present occupation? A. General superintendent of the St. Regis Company at their Deferiet plant.

Q6. What is the business of the St. Regis Company? A. Making newspaper and specialties.

Q7. Is the full name of the company St. Regis Paper Company? A. St. Regis Paper Company.

Q8. What are your duties as general superintendent? A. To supervise the operation of the plant and general supervision of the operation of the plant.

Q9. Of what is this plant made up, that is, what do you do there, the whole plant? A. What do we do there?

Q10. Yes. What do you start in with? You begin with the wood? A. Yes, we begin with the wood.

Q11. Just tell us what you do there? A. We take the wood and the mechanical end, grind the wood mechanically for the ground wood part and chip it for the chemical process, they call it, the sulphite process, which combined makes the sheet of paper.

Q12. Then you have both the pulp mill and the paper mill? A. We have both the pulp mill, paper mill and sulphite mill.

Q13. Was that word chop or chip? A. Chip. That is distinguished between preparing the wood for the mechanical process and preparing the wood for the chemical process. One is the grinding and the other is the chipping, which is cooked in the digesters.

Q14. What kind of paper is made at the St. Regis plant? A. We make mostly specialties, though we do make some news. It is known as a specialty mill, consisting of bag, high-grade wrappers and hanging.

Q15. How much news print do you make? A. We make about one hundred and forty-five tons a day.

Q16. What is the total tonnage capacity of the plant? A. That is the total, one hundred and forty-five tons of various kinds a day.

Q17. But not all news print? A. No. It all depends a good deal on what we are running. That is what we can make as a general average. That is what we figure on, tonnage, for a year.

Q18. About how much of that variety is news print? A. O, probably twenty per cent.

Q19. How long have you been in the paper mill business? A. Nineteen years the 16th day of last May.

Q20. You began what year? A. 1898.

Q21. Where did you begin? A. At Palmer Falls, N. Y.

Q22. What was the mill at Palmer Falls? A. A paper mill.

Q23. A paper mill? A. Yes.

Q24. A pulp mill also? A. Yes, sir.

Q25. What company operated that mill, if you know? A. The International Paper Company, at the time I went there.

Q26. Before that by whom had it been operated? A. The Hudson River Pulp & Paper Company.

Q27. Do you know about how long the International Paper Company had been operating it when you went there? A. Since February, the February before.

Q28. That is in 1898? A. 1898.

Q29. And this mill had been operated by the Hudson River Pulp & Paper Company up to that time? A. Yes, sir.

Q30. How did you go into that mill, what sort of work did you do when you went in there? A. I did miscellaneous work of various kinds, oiling, cleaning and sweeping, carrying out the waste paper, cleaning cores, loading pulp and coal, washing windows, practically everything there was to be done in a miscellaneous line about the mill.

Q31. How long did you continue doing that miscellaneous work? A. I should say in the neighborhood of eight or nine months, thereabouts.

Q32. Then what did you do next after you got through with the miscellaneous work? A. I went on as third hand on a paper machine.

Q33. How many paper machines in the mill at the time you were there? A. Nine.

Q34. What were the positions you occupied after going on as third hand on the paper machine? I wish you would state the different positions you had and about how long you were on each job? A. Well, I went on third hand on a paper machine, —of course before I went on I was studying the paper making business while doing the miscellaneous work,—I was on third hand five weeks and was advanced then to back tender, the next grade higher, and was back tender eleven months, when I was promoted to machine tender, and from machine tender I run the different machines through the years I was there until the November before I left I was promoted to night foreman over the paper mill or practically night foreman of the plant.

Q35. What year was that? A. That was in 1909. That was in 1908, in the fall of 1908, I was promoted to foreman of the plant.

By Mr. Lyman:

Q. You mean as night foreman? A. As night foreman of the plant.

By Mr. Paul:

Q36. When did you leave there? A. I left there the first

of April, 1909.

Q37. Just to get a little history of your work down to the present time state where you went from Palmer Falls? A. I was sent by the same company from Palmer Falls to Chisholm, Maine, to the Otis mill, in the position as paper mill day foreman, or assistant superintendent, as they called it. I was there from the first of April until the first of December the same year and then I was transferred to Watertown as division superintendent over the Woods Falls and Watertown mills.

Q38. Of the same company? A. Yes, sir.

Q39. How long did you stay in that position? A. I stayed in that position until the 8th day of last March, when I accepted the position as general superintendent of the Deferiet plant of the St. Regis Paper Company, which position I now hold.

By Mr. Lyman:

Q. And that is 1917? A. 1917.

By Mr. Paul:

Q40. Then you were employed by the same company, International Paper Company, from the time you went to work at Palmer Falls in 1898 until last March? A. Yes, sir.

Q41. And in three different plants? A. Three different plants.

Q42. You were at the Palmer Falls plant until April, 1909? A. Yes, sir.

Q43. And then you went to Maine for the same company and were there from April first to December first, 1909, is that right? A. That is right.

Q44. And then you came up to Watertown in December, 1909, and employed by this company until March, 1917? A. That is right.

Q45. What were the different positions in connection with the running of a paper mill at the time you went into the mill at Palmer Falls? You said you began as back tender. What were the other positions in connection with the running of the machine? A. When I was promoted to machine tender, when I went on running the machine, I was running the small machines and gradually worked up to the bigger machines.

Q46. What I wanted particularly, what are the different jobs about the machine? There is the machine tender, and what are the others? That is all there is on the machine is the machine tender? A. He is the highest on the machine.

Q47. What other men are employed on the machine? A. The machine tender, the back tender, third hand, fourth hand and fifth hand. The third hand now is generally designated as a winderman.

Q48. Then at the time you went there there were about how many men employed in the running of a single machine, how many men would you have besides the machine tender? A. On the small machines there were only three, the machine tender, back tender and third hand.

Q49. And on the larger machines would you have more men? A. On the larger machines there would be four and five.

Q50. How long did the machines run per day there at Palmer Falls? A. Twenty-four hours.

Q51. How many shifts of men? A. Two shifts at that time.

Q52. Who was the superintendent of the Palmer Falls mill at the time you went there? A. William Argy, Sr.

Q53. Who were some of the other men employed in the mill there at the time you went there or along about that time? A. William Argy, Sr., was superintendent and Michael Argy was assistant superintendent. John Cunningham was night superintendent, they called them then, and on days there was Michael Cummings, boss machine tender.

Q54. How many machines were there in the Palmer Falls mill when you went there? A. Nine.

Q55. Were any of them machines of recent installation, comparatively new machines? A. There were two practically new machines at that time.

Q56. What were the numbers of those machines? A. Number eight and nine.

Q57. What make were they? A. Pusey & Jones.

Q58. What was the width of wire? A. Why, approximately the No. 8 was a ninety-six and the No. 9 one hundred and forty-five, somewhere about that; 140 inch and 96 inch machines. I cannot remember the exact width of the wires, but that is practically what the width of the machines were.

Q59. The wires would be a little narrower? A. Yes, a trifle narrower than the width of the machine as designated by the bottom couch roll.

Q60. What were the other machines, the seven machines that were in the mill? A. What make?

Q61. What was the character of those, were those older machines? A. Yes, they had two old machines. One was a Sandy Hill and there was another one that I think was a Union, either a Union or Smith & Winchester, I am not just positive of the make of the machine, and the others were all Pusey & Jones.

Q62. Were you any relation to the superintendent, Mr. Argy? A. Yes, sir.

Q63. What was the relation? A. His nephew.

Q64. Is Mr. Argy, the superintendent, the man who was superintendent at that mill at the time living now? A. No, sir.

Q65. When did he die? A. He died in September, I am not positive, either 1914 or 1915, I could not say exactly.

Q66. You knew personally of his death? A. I was at his funeral. I buried him; helped to bury him.

Q67. How old a man was he at the time you went into the mill there at Palmer Falls? A. O, he was, I should say, about fifty-eight.

Q68. Did he continue as superintendent for some time after you were there, after you went there? A. About a year.

Q69. Who became superintendent after that? A. A man by the name of Theodore Elixman.

Q70. Do you remember how long Michael Argy stayed there? A. Michael Argy stayed there about two years after his father resigned.

Q71. I do not remember whether I asked you about the length of the wires on those machines at Palmer Falls, what was about the length of the wires on the 8 and 9 machines? A. They were either sixty-five or seventy. I am not positive, but they were long wires.

Q72. What was the length of the wires on the other machines? A. The seven machines, they were short wires, fifty feet.

Q73. Do you remember the width of the older machines? A. One was, the Sandy Hill I mentioned, was 82 inch, the No. 7, designating the numbers as they were then, No. 7 she was 120, and No. 6 was 110. I do not know how they did number those in the other room then but they are known now as No. 6, 7, 8 and 9. I think they were 5, 6, 7, 1 and 2, but I am not positive, but the way they are numbered now is 6, 7, 8 and 9, and taking the numbers as they are designated now No. 7 was 86; No. 8, 86, and No. 9 was an 88.

Q74. What are the present numbers of the machines that were 8 and 9 at that time? A. 1 and 2.

Q75. What is the present number of the machine that was No. 7 then? A. That is No. 5 now.

Q76. What was the position of the wires on the 8 and 9 machines at the time you went in there?

My Lyman: The question is objected to because there is no foundation laid in the answer for any defense based upon anything happening at Palmer Falls.

(Question read by stenographer.)

By Mr. Paul:

Q77. I mean by that what was the position as to pitch, were

those wires level, or if they pitched, which way did they pitch?

Mr. Lyman: It is stipulated that this objection may be regarded as taken to all subsequent questions along this line without further repetition.

A. They were elevated at the breast-roll end.

By Mr. Paul:

Q78. How much were they elevated and how was that elevation obtained? A. They were elevated between four and five inches and the elevation was obtained by placing hard wood, oak, under the legs of the Fourdrinier.

Q79. Which legs of the Fourdrinier were these pieces of oak placed under? A. Under them all.

Q80. What was the shape of the pieces of oak? A. They were wedge-shaped, graduated as they went towards the couch end, the one at the extreme couch end being of course very thin.

Q81. What was the character then of the pitch between the breast-roll and the guide-roll, did this pitch extend clear to the guide roll? A. Clear to the guide-roll, from the breast-roll to the guide-roll.

Q82. What position did the suction boxes occupy? A. They occupied the same positions, only they were tilted in order to adjust themselves to the pitch of the wire as it came over.

Q83. They had the same pitch as the wire? A. They had the same pitch as the wire, yes.

Q84. Was this arrangement used for both the No. 8 and 9 machines? A. Yes, sir.

Q85. And was this arrangement employed when you went into the mill? A. Yes, sir.

Q86. In 1898? A. Yes, sir.

Q87. At what speed were the machines run? A. No. 8 was run at 525 feet a minute and No. 9 at 480.

Q88. Were you in a position where you could observe these machines, in your position in the mill did you see them so you could personally observe? A. I worked there many days running the machines at work, making a study of it.

Q89. When you went into the mills at Palmer Falls did you intend to make the paper making business your business? A. Yes, sir.

Q90. And what did you do towards fitting yourself for that business? A. Well, I worked about as many hours as I could and studied the business in my spare hours, made it a study, went there to learn the business, intending to be a paper maker, intended to conquer it and learn the details.

Q91. Did you give careful attention to the machines themselves? A. I certainly did.

Q92. Construction and operation? A. Yes, sir.

Q93. Did you have any instruction or lessons from your uncle, Mr. Argy, in reference to paper making? A. Practically nightly.

Q94. Did you live with him? A. Yes, sir. I lived in his house.

Q95. Did you frequently go to him for instruction about the machines? A. Yes, sir.

Q96. And in regard to paper making? A. Yes, sir.

Q97. Did you in any way learn the purpose of giving this elevation to the breast-roll so as to have the pitch to the wire? A. Yes, sir.

Q98. From whom did you first learn that? A. Mr. Argy.

Q99. Your uncle, the superintendent? A. Yes, sir.

Q100. What explanation did he give you as the purpose of that elevation?

Mr. Lyman: The question is objected to, calling for hearsay.

A. He explained to me that on account of the speed of the machine, in order to get the stock flowing onto the wire so the stock would not flow faster than the wire or that the wire would not pull from the stock, it was necessary on account of speed to give this wire this elevation.

By Mr. Paul:

Q101. And in giving this elevation what did that do? A. It helped to close up the sheet and allowed the sheet to form well, so that the machine was safely run.

Q102. By what means was the stock brought onto the wire? A. By gravity.

Q103. What was the means employed in these other machines for bringing the stock onto the wire, what did you call that part? A. The flow; the circulation, they call it nowadays.

Q104. How was that regulated? A. That is regulated by the process known as the White water-pump or the mixing pump which is the agent for throwing the stock to the machines from the screens into the flow-box, then into the head boxes and onto the apron guided by the slices and onto the wire.

Q105. Was there any means on these machines for regulating this flow from the head-box onto the apron and then onto the wire? A. No, no means of regulating it, only that depended of course on the amount of water that you were working in your stock. The slice regulates the pond, the height and depth of the pond behind the slices just immediately before it flows to the wire.

Q106. What effect does the change of the height on the pond have upon the flow? A. Well, that depends on the condition of

your stock, whether it is a slow stock or free stock. If your stock is slow your slices will be run lower to the wire, which is not a good condition. If the stock is free your slices will be higher from the wire. In other words, the function of the slices is to level the sheet, to make the sheet uniform, and uniform as to weight throughout its width.

Q107. What is the effect of changing the elevation of the head in the flow-box, the head of the stock? A. The head in the flow box is guided by the slice. You have got to maintain a certain amount of head in order to make any sort of a sheet, or in other words, your head has got to be sufficiently high enough to back up against the slices, and in free stock, which requires more water, necessarily you will have a larger volume, your slices will be raised in order to let that volume out from under it onto the wire.

Q108. Can you in any way regulate the speed or velocity in which the stock goes onto the wire? A. No.

Q109. From the flow-box? A. Only by the construction of the flow-box.

Q110. Now, what effect does it have carrying a higher head? A. The effect would be that you have a higher head in your pond, you have a tendency to force the stock onto the wire with a greater velocity.

Q111. Now, turning again to this explanation that Mr. Argy, Sr., gave you of the elevation of the wire, did he explain to you what you have stated about this action of the wire in drawing the sheet? A. He did.

Q112. What did he say to you about that?

Mr. Lyman: Objected to as calling for hearsay.

A. He told me that the principal function of getting a good sheet was to get the sheet to travel the same speed as the wire so there will be no disturbance of the fiber forming, but if the stock flows faster than the wire it naturally would make a cloudy sheet because the fiber would be continually agitated in its travel down the wire. If the wire traveled faster than the sheet there would be a pulling of the wire from the stock, which would necessarily set up another agitation.

By Mr. Paul:

Q113. And what effect would that have on the character of the sheet of paper? A. Well, the sheet would not be well closed up, that the "look-through," as they call it, would be poor, would be open; open formation.

Q114. What about the strength of the sheet? A. It would necessarily affect the strength on account of the sheet not being well closed.

Q115. How soon after you went to work there at the paper mill was it that you had this explanation from Mr. Argy, was it before he retired as superintendent? A. Yes, sir; particularly after I went there to work.

Q116. What had you been doing before you went into this paper mill? A. I had been at school.

Q117. Where had you attended school? A. At Georgetown University, Villa Nova College and the University of Pennsylvania.

Q118. Had you graduated from college? A. I was a B. S. man from Villa Nova college.

Q119. After you received these explanations from Mr. Argy did you give any study to the machines yourself as to observing the action in view of the instruction Mr. Argy had given you? A. I did.

Q120. And what did you find from those observations of these machines? A. I found that the instructions I had received from him were practically true.

Q121. Your observations corresponded to what he had stated to you? A. They did.

Q122. And have you continued during the period since 1898 to study these machines? A. Very much so.

Q123. What have you found as to the correctness of the explanation Mr. Argy gave you at that time? A. I found that his explanations were correct.

Q124. I think you said you began running some of the machines there at Palmer Falls as a machine tender and went on from one machine to another and finally operated a No. 8 or No. 9? A. No. 9.

Q125. How long did you operate No. 9 as a regular job? A. O, nine months.

Q126. That was the nine months before you were transferred to Maine? A. The nine months before I was advanced to paper mill night foreman in the same mill.

Q127. Did you ever run the No. 8 machine? A. Not as a steady job; I have run her weeks at a time in other fellows' places, extra.

Q128. You were thoroughly familiar with the operation of that machine? A. Yes.

Q129. How did the speed of these machines, No. 8 and 9, with the pitch as you have stated, compare with the speed of the other machines in the mill, in a general way? A. Those two machines ran 100 feet faster on account of the other machines being old and shorter wires and could not stand the speeding up.

Q130. No effort was ever made to speed up those other machines at that time? A. Not until after years.

Q131. Was there any effort made to elevate those machines at that time? A. Yes, there was afterwards; that is, then they were re-built, practically; they were elevated.

Q132. But I am speaking now of the earlier time? A. No, there was no effort made to elevate them.

Q133. Those machines you say ran about how fast? A. Why, practically 400, 425, around there.

Q134. Did they do good work at that speed? A. They done pretty good work, yes.

Q135. Was there ever any change in the elevation of the machines 8 and 9 while you remained there at the Palmer Falls mill? A. Yes, sir.

Q136. What change was made? A. They elevated them approximately fourteen inches.

Q137. When was that done? A. That was done about 1906, thereabouts; 1906.

Q138. What speed were they run after they were elevated fourteen inches? A. No. 9 was increased to about 500 and No. 8 was about 560. Sometimes they used to attempt to get it to 600, but she never ran. Her average speed was about 560 to 575.

Q139. Did they continue to run at that elevation while you were there? A. They did.

Q140. Do you know whether there was any change made since? A. I could not say.

Q141. Under whose instructions were those machines raised to the fourteen inches? A. Well, I could not say as to that. I suppose it was, I think Mr. Cunningham.

Q142. You had no personal— A. I had no personal—I was just a machine tender, nothing personally to do with it.

Q143. When you were transferred to the Otis Mill of the International Paper Company at Chisholm what machines did they have at that mill? A. There was eight machines there. Six of them were Rice, Barton & Fales. No. 1 and 2 I am not positive just what make they were. I think they were Pusey & Jones. The other six were Rice, Barton & Fales.

Q144. Did any of those machines have any pitch to the wire? A. 1 and 2 did.

Q145. How much? A. O, ten inches.

Q146. How was that obtained? A. That was obtained by blocks under the Fourdrinier legs.

Q147. What about the others? A. No. 3 was perfectly flat. No. 3, 4, 5, 6, 7 and 8 were practically flat; they might have had

pitches of two and one-half.

Q148. What was the length of wire on the No. 1 and 2? A. They had a sixty-five foot wire.

Q149. And the others? A. The others were fifty-five to sixty; I could not say positively, but shorter wires.

Q150. What was being made at the Otis mill of the International Paper Company when you went there? A. News print paper.

Q151. What speed were the No. 1 and 2 machines running? A. No. 1 was running 500 and No. 2 was running 480.

Q152. And the other machines? A. The others run about 430 to 60.

Q153. Was there any change made in the pitch of those machines while you were there? A. I changed them.

Q154. What change did you make? A. I raised No. 4, 5, 6 and 7 to an inch and a half by raising the breast roll. I did not block up under the Fourdrinier, I raised the breast roll.

Q155. Could that be done without blocking up machines? A. Yes, sir.

Q156. By a screw adjustment? A. No, it was a slot in the leg of the Fourdrinier, a slot about three inches long.

Q157. That gave those machines about how much pitch? A. Four or five inches.

Q158. Did that pitch extend clear to the guide roll or suction boxes? A. It extended from the top of the breast roll to the top of the guide roll behind the couch roll.

Q159. How did you get an elevation of the suction boxes, were the rails divided on those machines? A. No. We got the elevation from adjustment screws, on the end of the boxes, tilting the boxes to get the pitch of the wire.

Q160. What was the effect if any on the speed of those machines by making this adjustment you speak of, was there any change made in the speed? A. Why, yes, we speeded up about fifteen feet on that little adjustment.

Q161. Not more than that? A. Not more than that, no.

Q162. Was there any change made in the 1 and 2 machines at the Otis mill while you were there? A. No.

Q163. When you came to Watertown in 1909 as superintendent of the division here of the International Paper Company what machines did you have in the plants under you and where were they located? A. We had seven machines in all, six of them being at the Woods Falls mills.

Q164. And where was the other? A. The other one was at the Watertown mill on Sewall's Island.

Q165. Where is Woods Falls? A. Woods Falls are located

below the city of Watertown in the town of Brownville.

Q166. How far from Watertown? A. About two miles.

Q167. Where was your place of business as superintendent of the mill here at Watertown, were you located at the Woods Falls mill? A. At the Woods Falls mill at Glen Park.

Q168. That was the mill where the six machines were? A. Yes, sir.

Q169. What were the makes of those machines at the Woods Falls mill? A. Four were Bagley & Sewall, one was a Smith & Winchester and the other was a Union.

Q170. Were those machines known by numbers? A. Yes, sir.

Q171. What were the numbers of the Bagley & Sewall machines? A. The Bagley & Sewall machines were Nos. 1, 2, 4 and 6.

Q172. What was the width of wire in the Bagley & Sewall machines? A. No. 1 machine the wire was 131 inches by 64 feet 11 inches long. No. 2's wire was 88 by 50 feet, 1½ inch. No. 4 machine's wire was 131 inches wide by 64 feet 11 inches long. No. 6 wire was 86 inches wide by 50 feet 1½ inch.

Q173. Any pitch to the wires of the Bagley & Sewall machines? A. No. 1 and 4 machines had a 12 inch pitch when I went to Watertown.

Q174. Nos. 2 and 6? A. No. 2 and 6 had two inches.

Q175. What about the No. 3 machine? A. No. 3 machine—

By Mr. Lyman:

Q175a. You have not told which that was, is that the Smith & Winchester? A. No. 3 was a Smith & Winchester, yes.

By Mr. Paul:

Q176. What was the pitch of the No. 3? A. No. 3 had a pitch of about an inch and a half.

Q177. What was the length and width of that wire? A. The wire was 88. We afterwards changed to 86. It is 86 now. I cut it down. 86 by 50 feet, 1½ inches. That is the length of the wire in those four machines.

Q178. No. 5 was the Union machine? A. No. 5 was the Union, yes.

Q179. What was the width of that? A. That was 96.

Q180. And the length? A. The length of the wire?

Q181. Yes? A. 50 feet 1½ inches.

Q182. I do not think I asked you the pitch on the No. 3? A. No. 3 had an inch and a half pitch and I afterwards raised her.

Q183. The No. 5, what was the pitch of that? A. No. 5, about an inch and a half.

Q184. What was the speed of No. 3? A. No. 3, 340.

Q185. And No. 5? A. 360.

Q186. What was the speed of the 1 and 4 Bagley & Sewall? A. 465 feet.

Q187. And of the 2 and 6? A. 2, 370, and No. 6, 390.

Q188. Now, those figures that you have given related to the machines as they were when you took charge of the plant in December, 1909? A. Yes, sir.

Q189. Now, did you make any changes in the pitch of any of these machines? A. Yes, sir.

Q190. Let us take first the two large Bagley & Sewall machines, the 132 inch machines, Nos. 1 and 4, which you said had a 12 inch pitch and were running at 460 feet, what did you do with those machines, if anything? A. I reduced the elevation of the pitch about five inches and three-quarters, between five inches and a half and five and three-quarters, thereabouts.

Q191. And did you make any change in speed? A. No.

Q192. They were running at 460? A. Yes, sir.

Q193. You left them at that speed? A. Yes, sir.

Q194. How soon after you took charge of this plant did you make this reduction in pitch? A. About a year afterwards on No. 4 and about two months after that on No. 1.

Q195. Did those continue to run at that pitch and speed until you left there last March? A. They did.

Q196. No change was made after that? A. No change was made after that.

Q197. Referring to the No. 2 Bagley & Sewall which you said had a pitch of an inch and a half— A. Yes, sir.

Q198. What did you do to that, if anything? A. I never disturbed it. She was that way when I left.

Q199. And what speed did that run? A. About 370.

Q200. Continued at that speed all the time? A. Why, at times we would go a little faster, but that was her average speed, 370.

Q201. What did you do, if anything, about No. 6 machine? A. Never touched her.

Q202. She had a pitch of 2½ inches? A. Yes, sir.

Q203. And did you make any change in the speed? A. No.

Q204. What speed was that running? A. About 390.

Q205. And it continued at that for all the time you were there? A. Yes, sir.

Q206. The No. 3 machine, that I think you said had a pitch of an inch and one-half? A. When I went there.

Q207. What change if anything did you make in that? A.

We raised her about six inches.

Q208. When did you do that? A. In 1913.

Q209. And what change if any in the speed? A. No change.

Q210. What speed was she running at? A. 340.

Q211. And continued at that speed? A. Yes, sir.

Q212. Up to the time you left there? A. Yes, sir.

Q213. Calling attention to the No. 5 machine which you said had a pitch of an inch and a half when you came to Watertown and took charge of this plant, was there any change made in that machine as to the pitch? A. There was no change contemplated in the pitch of the wire, but we added some thin blocks that laid under her legs and it might possibly have raised it a quarter of an inch, something like that. I never really checked her up; it was practically the same pitch; did not intend to disturb her.

Q214. What about the speed, was there any change in speed? A. She run about the same.

Q215. Those machines continued to operate as you have now stated up to the time you left there last March? A. Yes, sir.

Q216. What kind of paper were they making? A. News print.

Q217. All news print? A. When I left there they were making all news print.

Q218. Had they been making all news print during all the time you were there? A. No, sir.

Q219. What had they made besides? A. They made bag and water-finish wrapper and dry-finish butcher.

Q220. What part of the capacity had been on news print? A. News print, about 80 per cent.

Q221. 80 per cent had been all the time on news print? A. Yes, sir.

Q222. And when you left it was all on news print? A. No, there was about 20 per cent of it on novel, what they call novel paper.

Q223. What do you mean by novel? A. This cheap novel—

Q224. Bag paper? A. Bag paper, kind of cheap bag paper; call it novel paper.

Q225. What was your purpose of reducing the pitch on the Nos. 1 and 4 Bagley & Sewall machines to, did you say, six inches? A. Yes, sir.

Q226. What was the purpose? A. The purpose was to get the stock flowing onto the wire at the same speed as the wire.

Q227. What had you found about the result with the pitch that you had when you came back there? A. I found that the stock was flowing onto the wire too fast; there was too much

pitch, in other words, the stock was flowing faster than the wire.

Q228. Could you have speeded up the machines? A. No.

Q229. Why not? A. Did not have steam-power enough.

Q230. Now, you went up to the St. Regis paper mill in March of this year? A. Yes, sir.

Q231. How many machines did you find in that mill? A. Four.

Q232. What make machines? A. Bagley & Sewall.

Q233. And any pitch to the wire? A. There is.

Q234. How much? A. Approximately ten inches.

Q235. Are those machines all running at substantially the same pitch? A. Practically are, yes.

Q236. At about what speed are the machines running? A. Between 525 and 550.

Q237. Have you made any change in the pitch of the wires since you have been there? A. Not yet.

Q238. You say "Not yet." Does that mean that you contemplate? A. I contemplate doing it, yes; making changes.

Q239. What change do you contemplate? A. To lower the elevation to at least six inches.

Q240. Why? A. Why, because there is too much pitch on them for the speed.

Q241. What is the character of the paper made at the St. Regis? A. What do they make there?

Q242. Yes. A. They make hanging and some butcher, novel paper, high-grade wrapper and some news.

Q243. And what percentage of news? A. About twenty per cent.

Q244. Do all those Bagley & Sewall machines have any means for adjusting the breast-roll? A. No.

Q245. Can you raise or lower the breast-roll in any way on them? A. Not without blocking up.

Q246. Do you know whether any of the Bagley & Sewall machines have any means whereby you can change the elevation of the breast-roll? A. I could not say.

Q247. What machines were they that you spoke of having the slots? A. The Rice, Barton & Fales.

Q248. Where were those slots located? A. In the breast-roll and in the leg of the Fourdrinier frame next to the breast-roll.

Q249. How much could you adjust the position of the breast-roll by means of those slots? A. About three inches.

Q250. How much could you raise them above the level? A. About five inches.

Q251. The slots only permitted an adjustment of three inches, how could you get five inches? A. I wanted to raise about two inches and the adjustment bolt holding the breast-roll was at the bottom of the slot, so we used the slot in raising it two inches instead of blocking up under the legs.

Q252. What I was trying to get at, not as to those particular machines, but as those Rice, Barton & Fales machines were constructed what was the total amount of adjustment that you could get by means of these slots? A. Three inches.

Q253. How much of that would be above the level and how much below? A. Well, I could not say as to that. I do not believe I ever checked that off.

Q254. Now, when you used these slots to adjust those machines—I think you said those were the ones at Otis? A. Yes, sir.

Q255. How much could you raise the breast-roll by means of slots? A. Three inches.

Q256. And how much could you get them above the level, could you get them three inches above the level? A. That would depend on how the machine was set up on the sill. There was blocks, of course, under the legs. She had a slight elevation.

Q257. And you gave it more by raising— A. By raising the breast-roll in the slots.

Q258. Which machine was that? That is one of the machines at Otis? A. The machine at Otis, yes.

Q259. Do the Bagley & Sewall machines have some means for changing the position of the breast-roll in reference to the frame? A. Yes, sir; very slightly. I should say not over an inch and a half.

CROSS EXAMINATION.

By Mr. Lyman:

XQ260. What Bagley & Sewall machine were you referring to in your last answer? A. At Watertown and also at the St. Regis mill.

XQ261. You have not stated what the condition of the one machine at Watertown was when you came there in 1909. What was the condition of that machine? A. That is the No. 1 machine at the Watertown mill which we called the wrapper machine. I would say that it is a very old machine, composed practically of two machines which formerly had been relegated to the scrap-heap, part of it being now a Black & Clawson, and the other I could not say what it is.

XQ262. What was the pitch if any on that wire when you came? A. The pitch on that wire at the top of the breast-roll

was an inch and a half below the top of the guide-roll.

XQ263. What was the speed at which that machine was running? A. She made wrapping paper and made twenty-five feet a minute.

XQ264. Did you make any change in that machine? A. No, sir.

XQ265. When were these machines, Nos. 1 to 7, at Palmer Falls, rebuilt? A. Well, the No. 1 and No. 2 was not rebuilt at Palmer Falls.

XQ266. What about Nos. 3 to 7? A. No. 3 was not rebuilt. That you will have to designate the old numbers for those machines, I guess. Nos. 3, 4, 5 and 6 were rebuilt, which are now 6, 7, 8 and 9.

XQ267. Let us use the old numbers so as to keep things clear. A. All right.

XQ268. Was No. 7 rebuilt? A. Yes, sir.

XQ269. 3, 4, 5, 6 and 7 were rebuilt? A. No, the old numbers—3, 4, 5 and 6 were rebuilt. No. 7 was not.

XQ270. When were Nos. 3, 4, 5 and 6 rebuilt? A. I could not say positively, but I should—the best of my recollection about 1904; '3 or '4.

XQ271. In what did that rebuilding consist? A. Consisted of new Fourdrinier frame and new cones on the back line of the machines.

XQ272. No other changes? (No answer.)

XQ273. Were there any changes made in the Nos. 1, 2 and 7? A. No.

XQ274. Now, after the Nos. 3, 4, 5 and 6 were rebuilt was there any change made in the speed of those machines immediately? A. Yes, sir; they were speeded up.

XQ275. How much? I am speaking about immediately after they were rebuilt. A. After they started they gradually worked them up a little in speed, I should say approximately 40 feet.

XQ276. And that was in 1903? A. To the best of my recollection, thereabouts.

XQ277. Now, at what speed were Nos. 3, 4, 5 and 6 running when you left there? You left there in 1909? A. 1909. About 460.

XQ278. All about the same? A. Yes, sir.

XQ279. At what speed were Nos. 1, 2 and 7 running when you left there in 1909? A. No. 1 was running about 5—we are talking of the old numbers now, aren't we?

XQ280. Yes. A. I kind of get mixed up on those numbers. 1, 2 and 7 would be, No. 7 was running about 470. That

is now No. 5. Nos. 1 and 2, which was 8 and 9, No. 1 was running—we are talking about old numbers?

XQ281. Yes. A. No. 8 was running 525.

XQ282. That means old No. 1? A. That is old No. 8.

XQ283. I am talking about old No. 1? A. Old No. 1?

XQ284. Yes. A. Well, the old No. 1 was at the date when I left—you see the No. 1 and 2 was placed 3 and 4.

XQ285. Were what? A. 3 and 4 is now what No. 1 and 2 used to be.

XQ286. And what speed were those machines running when you left in 1909? A. 2 and 3?

XQ287. Old Nos. 1 and 2? A. That is 2 and 3. That is the two big machines.

XQ288. I don't know what machines you are talking about. I want to refer to the old Nos. 1 and 2 but you have referred to machines by their old numbers, Nos. 1, 2, 7 and 8 and 9. You said 8 and 9 were practically new machines? A. Yes, sir.

XQ289. All in the old numbering. Now, I ask you about those machines which, according to the old numbering, were known as No. 1 and 2? A. You have the old numbers. Of course those machines are not there now.

XQ290. Were they there? A. When I left?

XQ291. Yes. A. No.

XQ292. Where were they? A. They had been taken away, taken out, they had been junked. In their place goes Nos. 3 and 4.

XQ293. When were those machines, No. 1 and 2, junked? A. They were junked in the fall of 1906.

XQ294. How about No. 7, old numbering, what speed was that running when you left? A. About 465, 470.

XQ295. Now, what machines were put in to replace old Nos. 1 and 2? A. No. 3 and 4.

XQ296. The present No. 3 and 4? A. Yes.

XQ297. What kind of machines are they? A. They are Rice, Barton & Fales.

XQ298. They were put in when? A. They were put in in the fall of 1907.

XQ299. Were they put in with a pitch in the wire? A. Yes, sir.

XQ300. How much of a pitch did they have? A. Eight inches.

XQ301. At what speed did they run? A. They run along about 565 to 75.

XQ302. You said that the pitch on No. 8 and No. 9 was raised to fourteen inches at some time? A. Yes, sir.

XQ303. And when was it that it was raised to fourteen inches? A. I should say along about 1904. I could not exactly say. It was when I was running the machines there. They raised it before I left, anyhow.

XQ304. You don't know when it was? A. I should judge from the time that Cunningham came in as assistant superintendent; I should say about 1904.

XQ305. You said a minute ago 1906. Which is right? A. 1904, I will say.

XQ306. How did you happen to raise them at that time, Nos. 8 and 9? A. Well, I did not have anything to do with it at all. That was done by the superintendent.

XQ307. You were there at that time? A. I was there running the machine.

XQ308. Saw the change made? A. Yes, sir.

XQ309. Was it raised to fourteen inches all at once? A. Yes, sir.

XQ310. What Mr. Cunningham was it? A. John Cunningham.

XQ311. When did Mr. Cunningham leave there? A. John T. Cunningham?

XQ312. Yes. When did Mr. Cunningham leave there? A. He left there in July, 1906, I think. I am not positive; I am pretty positive that was the year. Yes, 1906.

(No XQ313.)

XQ314. Were the other machines given the high pitch at the same time that this fourteen inch pitch was put on the Nos. 8 and 9? A. Well, I could not say whether the pitch on old No. 3, 4, 5 and 6 was raised any after the new Fourdrinier part was put in. I am inclined to think that they were not in my time.

XQ315. That is, you think when you left there in 1909 the numbers, the old Nos. 3, 4, 5 and 6 had no pitch at all? A. I would not say that. I would not want to say how much pitch they did have, but I know they did not have very much of pitch. Why I remember that well was on account of putting the wires on. Might have had two inches, something like that, but they were not pitched to amount to anything.

XQ316. Were they running up hill? A. No, they were not running up hill.

XQ317. Is there any way of fixing precisely the date when that fourteen inch pitch was put in, Mr. Hazel, on Nos. 8 and 9? A. No, I do not believe I could. I know that Cunningham was assistant superintendent when the pitch was put on; that is the only way I can figure it, and he became assistant when

Mr. Mike Argy left there, about 1902. He left there, and Walker came there as superintendent in 1906; between those years. At that time I was running old No. 7 and I remember them telling about raising the pitch on that wire. Just what year I could not say.

XQ318. Was the No. 7 wire raised at the same time? A. No, sir.

XQ319. She was always flat? A. She was flat when I left there.

XQ320. Well, was that the first mill that you heard of at the time in which the high pitch had been put in? I mean had you heard at the time of any high pitches being put in any other mill at the time? A. I had heard that they were pitching wires high. It was a general comment all through that section.

XQ321. In what mills did they pitch wires high at that time? A. One mill I remember very well telling about, the Berlin mills, in Berlin, New Hampshire.

XQ322. Don't you mean the Gorham mills? A. Yes, Berlin mills of Gorham, Maine.

Mr. Paul: Is not that Gorham, New Hampshire? A. No, that is Gorham, New Hampshire.

By Mr. Lyman:

XQ323. Had you heard of it at any other mills except the one at Berlin that you can remember particularly? A. At Millinocket I understand they were pitching their wires at the same time, the Great Northern Paper Company.

XQ324. Any others? A. There might have been others. We had boys traveling back and forth, machine tenders, coming and talking it.

XQ325. It was the result of that general movement that you put in that pitch on 8 and 9? A. I could not say as to that. I did not have anything to do with it.

XQ326. It was the same time? A. It was about that time, I should say.

XQ327. Did you hear about this Rhinelander Paper Company using that same pitch? A. Why, I could not say that I ever heard about Rhinelander having used the high pitch to my knowledge.

XQ328. Did you hear of Eibel's name in connection with it? A. Not until sometime afterwards. I afterwards heard that some man by the name of Eibel had applied for a patent on it; something like that.

XQ329. When was it that you first heard of Eibel's application for a patent on it? A. Along about 1907, 1908, somewhere along there.

XQ330. About that same period? A. I should say so.

XQ331. How did you hear about Eibel, by the machine tenders that report those things around? A. Why, yes, practically. I did not read it out of any book; just listening to traveling paper makers talking about it.

XQ332. It was generally talked in the trade about that time? A. Why, yes.

XQ333. Did you ever see Eibel's patent? A. Did I ever see it?

XQ334. Yes. A. No, I never did.

XQ335. You never had it read to you? A. No. I have met Mr. Eibel himself.

XQ336. When did you meet him? A. About four years ago, in Watertown.

XQ337. At the time that fourteen inch pitch was put in was there any change made in the speed of Nos. 8 and 9? A. They attempted to get more speed out of it but I know they never gained over ten feet, which was due a good deal to the steam engine.

XQ338. What do you mean, it was due to the steam engine? A. Well, the engine was over-loaded. She was an old Rhode Island engine; quite considerable trouble in varying in speed.

XQ339. What was the speed at which No. 9 was operating when you were there? A. That is the old numbers?

XQ340. Yes. What was the speed? A. Why, 480, along about that, I am pretty positive. That was her maximum speed.

XQ341. What was it at the time you left there? A. About the same.

XQ342. Did not you say on direct examination that the speed on No. 9 was raised to 500 feet when the fourteen inch pitch was put in? A. I did not say that No. 9 had a fourteen inch pitch. No. 8.

XQ343. Didn't No. 9 have a fourteen inch pitch? A. Not in my time.

XQ344. How much of a pitch was put on No. 9? A. To my knowledge or to my best recollection I do not believe that she ever pitched at all in my time.

XQ345. At what speed was No. 8 running when you went there? A. 525.

XQ346. At what speed did she run after she was pitched to fourteen inches? A. She never done much better.

XQ347. Well, how much better? A. Well, 530, 540.

XQ348. She never got higher than that? A. She never got higher than 540, not until after we changed the steam engine.

XQ349. When did you change the steam engine? A. Since I left there.

XQ350. Did not you say on direct examination that her average speed was 575 while you were there? A. No.

XQ351. You did not say that on direct examination? A. I did not mean to say it if I did. I think her speed now, I am positive her speed now is about 575; she is running about 575.

XQ352. Did you ever try to get a higher speed than that while you were there? A. I did. I tried myself.

XQ353. How high? A. I tried to get it 600.

XQ354. And did not succeed? A. No, sir; did not make a pound of paper.

XQ355. When did you see those machines last? A. I was there two years ago this summer.

XQ356. What was the condition of those machines as to pitch at that time, all of them? A. Well, I would not want to make any statement in regard to them because I did not pay any particular attention to them.

XQ357. Well, about how much speed did they have? A. As far as I can say I am quite positive No. 8 and 9 had practically the same as when I left there. No. 2 and 3 has been put up, I think the superintendent told me something like sixteen, thirteen or sixteen inches under them.

XQ358. That No. 2 and 3, what were they, what would they be according to the old numbers? A. Those were the ones that replaced No. 1 and 2.

XQ359. What about old Nos. 3, 4, 5 and 7? A. I was not in that room at all. I could not say as to that.

XQ360. How about old Nos. 3, 4 and 5? A. I could not say as to that. The only thing I know about that old No. 4, I was there one Sunday about four years ago and he was then moving his slices perpendicular with his breast-roll and he told me that he was not, he was doing that so as to make up for not pitching the wire to get the same effect.

XQ361. When you saw that No. 9 machine two years ago what speed did it have? A. The No. 9 machine?

XQ362. Yes.

Mr. Paul: The old No. 9?

Mr. Lyman: The old No. 9.

A. I could not say.

XQ363. Well, about? A. I did not pay any attention to it.

XQ364. It had about the same pitch as No. 8, did it? A. I would not want to say, I could not say; I could not make any statement to that because I did not pay particular attention to it. No. 8 was high when I left there and naturally I happened

to notice her because she was supposed to be the flyer, as they called her.

XQ365. How about No. 9? When you saw it did it have some pitch? A. I could not say as to that, because if I took particular notice I would say how much it did have. I did not pay attention. In fact, the Sunday I was in there her wire was dropped and they were doing some repairs to the Fourdrinier and the tube rolls were out in the aisle. That is the reason I did not pay attention to it. If they have pitched that machine more since I could not say.

XQ366. Did you ever see No. 9 pitched? A. Not any more than she was when I went there.

XQ367. How much was she pitched when you went there? A. Four or five inches.

XQ368. That is No. 9, old number? A. Yes, sir.

XQ369. I understood you to say a minute ago that No. 9 was never pitched at all. Did I misunderstand you? A. I guess you did. No. 9 was four or five inches when I went there. The only machine, if I was to make a general statement of those machines, that was never pitched or never altered in my time there was old No. 7. She had a short wire, her wire was only a 50 foot wire. Whether they pitched that machine—as I say, I have not seen that machine in a good many years. I did not see it the last time I was there. Whether she is pitched or not I don't know. It was not pitched in my time.

XQ370. Do you mean to say that Nos. 1 to 6 inclusive, the old numbers, were pitched in your time? A. Well, whether No. 1 to 6, old numbers?

XQ371. Yes. A. Not unless they were pitched when they built over those Fourdriniers.

XQ372. You don't know whether they were or not? A. There was not much pitch on them; there was no pitch under them to amount to anything. I will make a general remark in regard to those machines that I know old No. 8 was put up to fourteen inches; just when I don't know; and No. 8 and 9 had from four to five inches pitch on them when I went there, and No. 3 and 4 started with eight inch pitch and was that way when I left, but I understand afterwards they elevated them to fourteen inches.

XQ373. You mean No. 3 and 4, new numbers? A. 3 and 4, new numbers, were elevated after I left. After that on the other side I could not say. I remember very well the fourteen inch pitch on No. 8 because it made a very difficult matter to get a wire on there. The breast roll was high and we had to build a platform to stand on in order to get the breast roll in.

XQ374. Was that a kind of a thing that excited your attention a good deal, a fourteen inch pitch? A. On account of the height of the breast roll, yes.

XQ375. What was there about it that made you take notice of it? A. Well, we did not have any tackle blocks for getting the breast roll in, and the tube roll frame was so high that it necessitated, in order to lift this breast roll in my arms we used to have to use platforms under our feet. That was a sort of abnormal condition that anybody would notice.

XQ376. Did you expect that was going to make paper, fourteen inch pitch, before you put it in? A. I did not have anything to do with putting it in. It was actually there, that was an actual condition which in my opinion was not feasible.

XQ377. Why not? A. Because they had too much pitch in their wire for the speed the machine was running and did not make as good a sheet as when they had the pitch down to six inches.

XQ378. Was a fourteen inch pitch an unheard of thing at that time? A. Unheard of?

XQ379. Yes. A. O, why no. We had had as high as twenty-four.

XQ380. At that time? A. In different mills.

XQ381. In what mills had you had them as high as twenty-four? A. I think one mill was Fort Edward. I could not say exactly what machine. They went up to twenty-four inches. I believe they went as high as twenty-four inches on two machines at Glens Falls mill.

XQ382. Of the International Paper Company? A. Yes, sir.

XQ383. Was that before you put in that fourteen inches? A. Well, about that time.

XQ384. How much had they got at the Great Northern at that time? A. How much had they?

XQ385. Yes. A. I did not know at that time, but I have since been told by the manager they went as high as twenty inches and gradually dropped back again. Mr. Parks, I was talking with him one day, and he was talking about it.

XQ386. You are not a great believer in a pitched wire, I take it? A. Not until you get a certain speed.

XQ387. Until you get a certain speed? A. Yes, sir.

XQ388. What speed? A. O, 650, 75. A machine with a 65 foot wire running between 500 and 600 feet, a six inch pitch is plenty provided you are furnishing a proper stock to the machine.

XQ389. Is the six inch pitch an important pitch, an important thing at those speeds? A. Why, I should not go on

record as saying it was. I think the machines can be built now without any pitch at all and be successful.

XQ390. Have you seen any? A. No, but I am going to see one pretty soon, as soon as I can get time to fix them.

XQ391. How are you going to get the speedy quality that you want? A. Shall I answer that question?

Mr. Paul: You do not need to answer if it is something you are working on yourself.

A. It is a patent of my own.

Mr. Paul: You can decline to answer that question if it is some matter you are working out yourself.

By Mr. Lyman:

XQ392. Up to 1906 or thereabouts was it the usual practice to run wires, in making bag paper, up-hill? A. I was told,—yes, I would say it was the proper way, and as I understand, that is the way it is made. I never worked on bag but I imagine making wrappers is the same thing.

XQ393. Is the high pitch practice universal now in news? A. I understand that it is.

XQ394. What do you mean by high pitch? A. O, twelve, fourteen and sixteen inches.

XQ395. It is generally supposed you can get a good deal more speed out of the machine if you have that pitch than if you do not? A. That is the general belief.

XQ396. Everyone has always been working for speed ever since you have been in the business? A. Yes, up until lately. They are getting away from that now.

XQ397. Do not want any more speed? A. Why, there is no such demand for speed.

XQ398. Why not? A. It has got to be common. There was a time a long while ago when the mills were putting on wires and changing speed in thirty-five minutes, putting on a felt in twenty minutes; the machine was running 700 feet a minute and 800 feet a minute. You do not hear much remarks of that in big production. It depends a good deal in my opinion on the quality of the paper. There is a big demand for a good quality of paper, and the high speed machine with a high pitch does not make a good sheet of news paper. That is final. With a slow machine, running 350 feet, with moderate length wire and no pitch whatever, makes the best sheet of news paper.

XQ399. What was the head that you carried on those machines at Palmer Falls, the head back of the slices? A. Three to six inches. Five inch average head, I would say.

XQ400. What was the head you carried on the machines at Otis? A. About the same.

XQ401. About five inches? A. Yes.

XQ402. What was the head which you carried behind the slices on these machines at Watertown, I mean at Glen Park? A. About six or seven inches. Depends a good deal on the machine and the condition of stock. That would be an average head of five or six inches.

XQ403. What was the head on the machine at Watertown? A. About three or four inches. I don't know that I ever measured it. I would not go on record as saying that. I very seldom looked at her anyhow.

XQ404. What head do you carry at St. Regis? A. About four inches and a half, five.

XQ405. Do you know whether the International Paper Company took a license under the Eibel patent while you were connected with them? A. I know that I put on those plates, license plates on each Fourdrinier.

(No. Q406.)

XQ407. It said "Licensed under the Eibel patent"? A. Yes, sir.

XQ408. Did you ever measure the pitch on these machines, Nos. 8 and 9? A. No.

XQ409. Were the rails on those machines continuous from the breast roll down to the guide roll? A. No, there was a break down just before you got to the suction boxes.

XQ410. Was there any blocking under the suction box section? A. No, we usually used adjustment screws.

XQ411. These adjustment screws were under each individual suction box? A. Two on each corner. They come up onto the roll so you could get your tilt to the box any angle you want it.

XQ412. By those screws you could tilt those boxes? A. Yes, sir.

XQ413. Could you raise just the box by the screws or tilt them? A. They were for tilting. They were really jack cap screws. The boxes were held up themselves by two bolts that went through the rail. As you tightened up the bolts, if you wanted to tighten this side, you wanted to get the pitch this way, you kept the edge of the boxes over this way; if you tightened on this side you jacked on that.

XQ414. You could not raise the boxes as a whole and get the tilt? A. You could raise the boxes as a whole with the bolts. It was an old-fashioned way of holding up the suction boxes.

XQ415. How much could you raise the suction boxes as a whole by those screws? A. On this particular machine you could raise them about an inch and a half, on No. 8, because

the bolts were shrouded; the nut was a shrouded brass nut, did not have any opening in the top; I should say about an inch and a half high.

XQ416. You could raise both the front and rear edge of *the boxes by* that means? A. You could give them an inch and a half angle.

XQ417. Give them an inch and a half angle? A. Yes, sir.

XQ418. See if you understand what I mean. It is one thing to tilt your suction box so that the top of it is a certain angle? A. Yes, sir.

XQ419. It is another thing to raise the box as a whole? A. Yes, sir.

XQ420. What I am asking is whether by those screws that were on that machine you could do anything more than give the boxes the angle that you desired, that is, could you raise the box bodily as a whole? A. Yes, sir.

XQ421. How much could you raise the box bodily? A. An inch and a half.

XQ422. How much could you raise either end that you wanted to? A. That is tilt it?

XQ423. Yes. A. You could tilt, allowing for the nuts to catch on the thread so she would hold, you could tilt it an inch and a half, just as much as you could bring it up with the other nuts.

XQ424. You could raise either edge that you liked an inch and a half? A. I would not say you could raise it an inch and a half, you could only raise the whole box an inch and a half. You would naturally have to have enough thread to hold your nut. I should say an inch and a quarter would be enough. You could raise that at least an inch and a quarter, anyhow, if you wanted to; you could tilt your boxes an inch and a quarter.

XQ425. How much of an elevation could you give to your breast roll without raising your suction boxes at all? A. How much of an elevation?

XQ426. Yes, can you give to your breast roll without raising your suction boxes at all? A. That would depend on the,—you could not give it any.

XQ427. Why? A. Because it would take your wire off your suction boxes.

XQ428. Now, has that No. 8 machine,—have you any means of knowing whether if there was no blocking under the breast roll end of that No. 8 machine the wire would have been traveling up-hill or level? A. No, I could not say.

XQ429. The blocking that you put under it was four inch

blocking, was it? A. I was told, and from observation. I never measured it. I should say it was four or five inch blocking.

XQ430. And that tapered down to nothing at the suction box? A. Tapered down to nothing at the guide roll behind the couch roll.

XQ431. This suction box section was raised? A. Naturally would be raised.

XQ432. Was there blocking under the suction box section? A. Yes, sir. Thin blocking.

XQ433. Didn't you say a few minutes ago there was no blocking under the suction box section? A. There was no blocking under the suction box section?

XQ434. Yes. A. There naturally would be blocking.

XQ435. I ask you whether you did not say a few minutes ago there was no blocking under the suction box section? A. If I did I did not understand the question.

XQ436. It is not true, anyway? A. No. You would not want to get a camel's back in the middle of the Fourdrinier, a man naturally would not.

XQ437. Prior to the time that fourteen inch blocking was put in under the breast roll end of No. 8 machine did you ever try to give the wire any more pitch than four or five inches? A. No, it was never disturbed.

XQ438. What was the purpose for which those adjustments were put in these various machines, the Rice, Barton & Fale machine, for example, which allowed you to raise or lower the breast roll slightly? A. Why, in my opinion they were put in there to take care of the wearing of the bearing.

XQ439. Just what does that mean? How did the wearing of the bearing affect it? A. Of course if you had, if that was made without,—your breast roll elevated an inch above the top of the guide roll and that is what you wanted, you had a brass bearing there that wore out a quarter of an inch, you would be a quarter of an inch down where you would not want to be, still your bearing would not be wore out without making your adjustment with the slot and screws.

XQ440. That is the whole purpose? A. So far as I know, yes. That is what we always considered it.

XQ441. Did not have anything to do with quick or slow stock? A. No.

XQ442. They were provided so you could run either up-hill or down-hill an inch or two? A. Possibly they were when they were originally set up, for the legs were set right on the sill.

XQ443. Why should anyone want to run up-hill? A. Why should they?

XQ444. Yes. A. They would want to run up-hill if they had slow stock and slow speed.

XQ445. Why should they want to run up-hill if they had slow stock? A. Because you would have naturally a slower pond behind your slice and want to slow your stock up going onto the wire.

XQ446. So as to get greater drainage? A. Drainage from your sheet?

XQ447. Yes. A. Yes, sir.

XQ448. Now, if you raised your breast roll slightly above the level would that be properly adapted to which stock? A. Why, I do not think the raising or lowering the breast roll three inches amounts to a darn. I never could see it; or on any sheet. I never changed the pitch yet unless I went six inches either up or down.

XQ449. You mean nothing short of that amounts to a darn? A. I do not think it amounts to a darn, in my experience, and I have changed a good many of them.

XQ450. Why is that because it does not have enough effect? A. It does not have enough effect.

XQ451. Do you know whether or not there have been any changes in the Watertown machines since you left in March of this year? A. I don't know.

XQ452. You spoke of having made some investigations to determine whether what your uncle told you was true. What investigations did you make? A. You mean since that time?

XQ453. At any time? A. Well, from observation in my former days. Of course it was all theory to me. After I got to where I could put it into practice I found he was right.

XQ454. Just when did you find he was right? A. Well, I found he was right nine years ago.

XQ455. That would be 1908. Where did you find he was right in 1908? A. At the Otis mill.

XQ456. How did you prove he was right in 1908 at the Otis mill? A. I proved that the machine I was running 440 with three or four inches of pitch was sufficient. I found when I got to Watertown a twelve inch pitch with sixty-five foot wire running 465 was too much. In fact I put the Fourdrinier back to the same condition we had on the No. 8 machine at Palmer Falls.

XQ457. What did that prove to you? A. It proved to me it was the proper thing to run.

XQ458. What was the proper thing to run? A. That six inches was enough of pitch on wire of sixty-five feet between speeds of 400 and 600.

XQ459. Was that what your uncle told you? A. That is what my uncle told me he believed.

XQ460. Just what did your uncle tell you? A. He told me with the sixty-five foot wire on No. 8 machine the pitch from four to six inches was *plenty, and, in his opinion, if that machine* could be put to 600, why that would be a sufficient pitch.

XQ461. You said before that he told you something about commotion on the wire, didn't you? A. Yes. He wanted to get the stock traveling at the same speed as the wire.

XQ462. Did you ever make any investigations to determine about that point? A. No. I never made any investigations only what I saw in these two machines at Watertown.

XQ463. What did you see on the two machines at Watertown? A. I saw that twelve inch pitch was too much for the speed; the stock was running away from the wire.

XQ464. How can you tell whether the wire is running at the same speed as the stock or not? A. How can you tell?

XQ465. Yes. A. Whether the sheet is snaky on your wire, whether it is cloudy, or closed up. A stock that is running faster than the wire is impossible to level the sheet to get any kind of spread; she is snaky, what they call a poor spread.

XQ466. How does that show itself on the wire as it is traveling down the machine? A. Wavy, snaky; just like that. You cannot do anything with it.

XQ467. Did your experience with the No. 8 machine at Palmer Falls with the four inch pitch teach you the desirability of using the twelve inch pitch? A. No.

XQ468. Did you put the license plates under the Eibel patent on the machines at the St. Regis Company since you were there? A. Yes, since I was there.

XQ469. When did Michael Argy leave the employ of the Palmer Falls mill? A. Well, I could not say the exact year. I should say in 1901. I could not give the year exactly. I think he was there about two years, a year and a half after his father left.

XQ470. Your preference is, as I understand it, to start the stock upon the wire at the same speed with the wire? A. Yes, sir.

XQ471. Did you say you put the license plates on the St. Regis machines yourself? A. Yes, sir. It has been put on since I have been there.

XQ472. You did not find it there when you went there? A. No, they were sent there since I was there.

XQ473. Was Thomas Woods at Palmer Falls at the time you were there? A. Why, he was not working there. He got

done soon before I went there. He lived there.

XQ474. But he never worked in the mill while you were there? A. No.

XQ475. Was the trouble at the Palmer Falls machine No. 8 which the blocking was designed to remedy, that stock was over-traveling the wire or under-traveling the wire? A. I could not answer that question because I was not foreman then.

XQ476. Your investigations did not show you about that? A. I will say I never was in sympathy with the twelve inch pitch.

XQ477. I am asking about the four inch pitch? A. About the four inch pitch?

XQ478. Yes. A. What was the question again?

XQ479. (Question read by stenographer): Was the trouble at the Palmer Falls machine No. 8, which the blocking was designed to remedy, that the stock was over-traveling the wire or under-traveling the wire? A. The stock was under-traveling the wire; that is, it never under-traveled the wire in the machine because the machine had been pitched when she started. The old gentleman was wise enough to know that condition and had the machine built that way. That is the way it was set up.

XQ480. You are sure that both No. 9 and 8 had this four inch blocking, are you? A. Yes, sir.

XQ481. No. 9 as well as No. 8? A. Yes, sir.

XQ482. Do I understand you to say that you think the ten inch pitch used in the St. Regis now with a speed of 525 to 550 feet is too great a pitch, do you think, and causes the stock to overrun? A. It certainly does.

RE-DIRECT EXAMINATION.

By Mr. Paul:

RDQ483. If you did say on cross examination at one point that the No. 9 machine there at Palmer Falls was never pitched at all was that a misunderstanding on your part as to the question? A. What I meant by that was that her original pitch was never changed in my time, to my knowledge.

RDQ484. You were not referring to the original pitch when you say it was never pitched at all? A. No. The talk of pitch of the machine means that when they changed the original condition.

RDQ485. I understood you to say that the 8 and 9 machines at Palmer Falls when you went there had a pitch of between four and five inches? A. Yes, sir.

RDQ486. And did Mr. Argy, Sr., explain the pitch of that to you and that you were able to run those machines, No. 8, at

525 and the No. 9 at 480? A. Yes, sir.

RDQ487. Is that right? A. That is right.

RDQ488. And then you said later that you thought that nothing short of six inches pitch amounted to a darn. Did you mean that the four and five, between four and five inch pitch that was given to this machine did not amount to anything? A. I believe it did.

RDQ489. Then how? A. I would say that if you put five inches more you would have to put six inches more on that four inches to get any effect unless you went over 100 feet speed; that is, if you have got five inch pitch on the wire and she is running 480 you can go to 580 just as easy, without giving any more pitch.

RDQ490. Just what do you mean by saying that nothing short of six inches amounts to a darn? You mean five inches does not amount to anything? A. Five inch pitch amounts to five inches, but if you were going to raise it any it would not do any good to raise it two inches more or three inches more. To get any effect at all you have to go to six inches more. That is what I mean by that. In the gradual stages up and down it either ought to go up six inches or go down six inches.

RDQ491. And when you get up to five inches you think you have as good an effect as you have at ten? A. Not unless you get her up high in speed, because naturally the wire will pull.

RDQ492. Let me get that clear. Now, we go up to five inch pitch and we want to raise a certain speed. Now, if you wanted to make an increase in the pitch how much more would you go up? You say you would not go up one inch or two inches, how much more would you go? A. I would go six inches.

RDQ493. You would go six inches if you were going to make any change? A. Yes, sir. I would not go six inches unless I was going one hundred feet faster.

RDQ494. Now, if you were running with five inch pitch how high would you run an ordinary machine? A. How high?

RDQ495. Yes. What speed would you think would be proper? A. Six hundred.

RDQ496. Run 600 with five inch pitch? A. Yes, sir.

RDQ497. You think that is high enough? A. That is high enough. But there is other elements entering into that that lots of paper makers don't know.

RDQ498. Now, the 8 and 9 machines at Palmer Falls I understand were set up before you went there? A. Yes, sir.

RDQ499. You don't know whether they started them up at all without any blocking? A. I don't know only what my uncle told me that they were started with that pitch. Of course,

I was not there to see it.

RDQ500. Now, do you think this fourteen inch pitch on the No. 8 machine,—you think this fourteen inch pitch on the No. 8 machine was put in after there was talk of the high pitch at Berlin? A. I think it was.

RDQ501. Then if that was 1906 or '7 that would fix the date of this fourteen inch pitch on No. 8 as later? A. Yes, sir.

RDQ502. You have no positive way of fixing that date? A. I have no positive way of fixing the exact date of that change.

Mr. Paul: Will you waive the signature?

Mr. Lyman: Yes.

Recess until 2 o'clock.

Afternoon session, June 19, 1917.

JOHN D. BAILEY,

sworn for defendant:

By Mr. Paul:

Q1. What is your name? A. John D. Bailey.

Q2. Where do you live? A. At Potsdam, N. Y.

Q3. How old are you? A. Forty-two.

Q4. Where are you employed? A. DeGrasse Paper Company at Pyrites, N. Y.

Q5. What is your work? A. Running No. 1 machine there.

Q6. A machine tender? A. A machine tender, yes.

Q7. What is the Degrasse Paper Company, what do they manufacture? A. They manufacture news for the New York World. It belongs to the New York World.

Q8. Do they make anything besides news print paper? A. No, sir.

Q9. What is the capacity of the plant? A. The greatest capacity of the plant is 165 tons in twenty-four hours.

Q10. How many machines have they? A. Four.

Q11. Those are all Fourdrinier machines? A. Yes, sir.

Q12. What make machines? A. There is No. 1 is a Rice, Barton & Fale. No. 2 was almost anything that you had a mind to call it until the New York World got hold of it and they are building it up now and it is almost all Bagley. They have repaired it, you know; and the other two are Bagley & Sewall machines, No. 3 and 4.

Q13. What machine do you run? A. No. 1, the Rice, Barton & Fale.

Q14. How long have you been in the paper mill business? A. Since I was fifteen years old.

Q15. And that would be how many years, you are forty-two

now? A. Forty-two now.

Q16. Twenty-seven years? A. Yes, sir.

Q17. Where were you born? A. In Neenah, Wisconsin.

Q18. With whom did you begin working when you were fifteen years of age? A. The C. W. Howard Paper Company in Menasha, right across the river from Neenah.

Q19. That is when you were fifteen years of age? A. Yes, sir.

Q20. What did you do with the Howard people? A. I was at that time what they called the third hand; among others, if the cutter girl happened to lay off—we had a cutter on the machine then and the cutter ran twenty-four hours the same as the machine—if a cutter girl happened to lay off I had to take her place, and if the girls were all there I had to clean screens and sweep the floor, and things like that. Nowadays we do not call that third hand work; even a fifth would scorn to do that nowadays, but at that time things were a good deal different.

Q21. How long did you work for Howard? A. I can't say; two years, something like that.

Q22. Then where did you go? A. I went up to the Winnebago Paper Company in Neenah.

Q23. What did you do there? A. Third hand there.

Q24. Same kind of work? A. Same kind of work. Afterwards, well, I got to spare back-tending there and after a little I got so I could back-tend and when a man laid off why I took his place.

Q25. Then where did you go? A. Then I went to Kimberly, Wisconsin.

Q26. Who did you work for there? A. Peter Thom at the Kimberly & Clark Company.

Q27. Where was that mill located? A. At Kimberly, Wisconsin, about four miles out of Appleton, down the Fox river.

Q28. That was the old mill? A. That was the old mill, before it burned down.

Q29. Do you know how long you worked for—we will take all three, take Howard, Winnebago and the Kimberly-Clark, how long were you working for those three concerns altogether? A. It would be kind of hard for me to say offhand. In Kimberly I did work for the Combined Locks Paper Company for a short while.

Q30. Did you go to the Combined Locks before you did to Kimberly & Clark? A. No, after I did, but I only worked a short while.

Q31. I was trying to get at how long you were with the Howard and the Winnebago and Kimberley Clark before you

went to the Combined Locks, what did that amount to altogether, if you cannot separate it? A. Well, it was in about 1902 or '3, during the World's Fair at Chicago, that I went to the Combined Locks.

Q32. Do you mean 1902 or '3 or would you say 1893? A. 1893.

Q33. You went to the Combined Locks mill in 1893? A. Yes, sir.

Q34. During the World's Fair? A. Yes, sir.

Q35. And you have been with the other three concerns— A. Up until that time.

Q36. From the time you went to work there? A. Yes, sir.

Q37. Where was the Combined Locks mill located? A. About two miles below Kimberly, about a mile and a half from Kaukauna.

Q38. What did you do at the Combined Locks mill? A. I back tended on No. 3.

Q39. How long were you there? A. I should say three months. I was not married then and I was not very steady. I was a young lad then.

Q40. What do you mean by you were not very steady? A. Well, I did not care whether I worked in one place long at a time or not, because there was lots of jobs and I wanted to take the advantage at the best jobs that came along.

Q41. Now, where did you go from the Combined Locks mill? A. To Tomahawk, Wisconsin.

Q42. Who did you work for at Tomahawk? A. A. M. Pride, Anson Pride.

Q43. What was the mill there? A. Making news.

Q44. That was a paper mill? A. Yes, sir.

Q45. Has all your work been in paper mills? A. Yes, sir.

Q46. Since you began working at fifteen? A. Yes, sir.

Q47. How long did you stay at Tomahawk? A. I could not say exactly; I might have been ten years, a little bit more, but nothing less.

Q48. What did you do when you first went there? A. I back tended there.

Q49. On a Fourdrinier machine? A. On a Fourdrinier machine, yes, sir.

Q50. How long were you back tending? A. O, I should say two years.

Q51. Then what did you do? A. Then I ran a machine.

Q52. You were what they call a machine tender? A. Yes, sir.

Q53. How long were you a machine tender there at Toma-

hawk? A. Well, as near as I can recollect, eight years; possibly more; not less.

Q54. You were there altogether about how long? A. About ten years.

Q55. Did you work all the time in the same mill? A. Yes, sir.

Q56. Did you do work in any other mill there in Tomahawk? A. No, only when the new mill was built that belonged to the same company, right across the river, I went over there and started up a new machine; a new Beloit machine.

Q57. That was a Beloit make of machine? A. Yes, sir.

Q58. Do you know when that was? A. I think it was in 1904.

Q59. How long did you work over there on that Beloit machine? A. I could not say for certain.

Q60. Did you go back to the first mill at Tomahawk after you had run this Beloit machine at the new mill? A. No, I did not. Come to think of it now I think it was the spring of 1905, early in the spring, that I started up the new machine across the river. I think, to be certain about it, I think Mr. Pride had the records of it; in fact I have had letters from him.

Q61. Where did you go from the Tomahawk? A. To Rhinelander, Wisconsin.

Q62. When did you go to Rhinelander? A. In the spring of 1905.

Q63. What did you do at Rhinelander? A. I ran the No. 1 machine there.

Q64. That was a Fourdrinier machine? A. Yes, sir.

Q65. What make? A. Beloit Iron Works.

Q66. How long did you work in that mill? A. Well, it would be pretty hard for me to say. I think I ran a machine there about one year and then was put on boss machine tender. They had two machines and the boss machine tender's work is all days and sometimes nights and to have the care of both machines and to see that they are in good running order for the night tour, and to be kept in repair all the time, clothing kept on them.

Q67. As near as you can fix it when was it you went to Rhinelander? A. Well, it was sometime the latter part of April, or first of May, I think.

Q68. What year? A. 1905.

Q69. And you ran a machine first, you were machine tender for about a year? A. About one year, yes, sir.

Q70. And then you became boss machine tender? A. Yes, sir.

Q71. How long were you boss machine tender? A. Well, after that Eibel sent me out on the road with the Eibel Process Company, and then I really didn't know what kind of a job I had.

Q72. How long was it that you were machine tender? A. That I was boss machine tender?

Q73. When was it you went out on the road, do you know that? A. Well, it was early in the spring, I should say. One year I was boss machine tender there.

Q74. And that would carry it up to 1907? A. That carried it up to 1907, yes, sir.

Q75. Now, going back to the Tomahawk mill, how many machines were there at that mill at Tomahawk? A. In the old mill there was only one, a 76 inch machine.

Q76. What make was that? A. Well, that was anybody's make. I could not tell you. It was picked out of a pile of ashes, I guess.

Q77. An old machine? A. It was an old machine, and what we called a junk pile.

Q78. What about the new machine across the river? That was a Beloit? A. Built by the Beloit Iron Works.

Q79. How large was that machine? A. 84. It has since been replaced by a 120 inch; taken out.

Q80. At that time it was an 84 inch machine? A. Yes, sir; 84.

Q81. Do you know William Eibel? A. Yes, sir.

Q82. When did you first become acquainted with Mr. Eibel? A. In Tomahawk, when I first went to work there.

Q83. What was he doing there? A. Bookkeeper.

Q84. For the company? A. For the Tomahawk Pulp & Paper Company.

Q85. That was the company that you worked for? A. Yes, sir.

Q86. He was working there when you went to work in the mill? A. Yes, sir.

Q87. And was working as bookkeeper? A. Yes, sir.

Q88. Did he ever work in the mill while you were there? A. No, sir.

Q89. Did you ever see him run a machine? A. No, sir.

Q90. And doing anything about a paper machine? A. No, sir.

Q91. Did you know him pretty well during that time at Tomahawk? A. I did.

Q92. With him considerably? A. Yes, sir, I was associated with him considerably, even down to visiting his home and he

visiting mine.

Q93. Were you married at that time? A. Not in the beginning I was not married, until 1898.

Q94. Was Eibel married when you first went to Tomahawk? A. No, sir.

Q95. Was he married later? A. He was.

Q96. While you were at Tomahawk? A. Yes, sir.

Q97. Did you see considerable of him during those years there at Tomahawk? A. Yes, I saw him every day; almost every day, of course.

Q98. And were you together considerably when you were away from business? A. Yes, sir.

Q99. Did he during that time ever explain any improvement or change in a Fourdrinier machine to you? A. No, sir.

Q100. Did he ever suggest that he had any such thing? A. No, sir.

Q101. Did he ever talk with you about the desirability of speeding up a paper machine? A. No, sir.

Q102. Did he show in any way from any of his talk with you at any time during that period that he was familiar with the construction and operation of such machines? A. No, sir.

Q103. Which of you left Tomahawk first? A. Mr. Eibel left first.

Q104. Where did he go? A. He went to Rhinelander.

Q105. About how long before you left Tomahawk did he leave? A. I would say about eight months. He left sometime in the summer and I did not go until the next spring, but I could not state the exact date.

Q106. Do you know what he did at Rhinelander? A. He named himself the assistant manager. I don't know what he was rated in the office or among the employees.

Q107. He told you he was assistant manager? A. He told me he was assistant manager. I know one of his positions was to go out in the stock house and find out how many felts, wires, jackets and any number of other repairs we had on hand so that we would not run short. I know he explained this to me afterwards.

Q108. Was Eibel working there when you went to work at Rhinelander, working at the Rhinelander mill? A. Yes, he was superintendent when I went there.

Q109. How did you happen to go there? A. Well, being a pretty good friend of Eibel's he insisted on my going over there. In fact, I wanted a change. I had been with one company quite a while and wanted to change.

Q110. Well, it was through him that you got that position?

A. It was through him I went there; yes, sir.

Q111. That you say was the summer of 1905? A. Yes, sir. In the spring of 1905.

Q112. Did you know Mr. T. F. Woods? A. Yes, sir.

Q113. What was he doing when you went over to Rhinelander? A. He was working in the mill at the time I went over there. He had already got through.

Q114. He was there in town? A. He was in town, yes, sir.

Q115. And did he leave after that? A. He left a month or two after I went over there.

Q116. When you went to Rhinelander what was your first work? A. Running No. 1.

Q117. That was a No. 1 Fourdrinier machine? A. Yes, sir.

Q118. What make? A. Beloit Iron Works.

Q119. What was the width of the machine? A. 118.

Q120. And the length of the wires, do you know that? A. 65 feet.

Q121. What shift were you on when you went there, on the day work or night work, or did you change? A. By gosh, that is getting it pretty fine. I don't believe I can remember.

Q122. Did you change from week to week or time to time? A. Yes, we changed. We were working what we call the long hours. We were working eleven hours in the day and thirteen at night.

Q123. How many shifts did you have then? A. Two in twenty-four hours.

Q124. Two crews for twenty-four hours? A. Yes, sir.

Q125. What was the system, how did you change? A. We changed at seven o'clock in the morning and six o'clock at night.

Q126. How long did you run at night? A. Thirteen hours.

Q127. How long did you keep the night run before you changed over to the day run? A. One week.

Q128. You did not run Sundays? A. No, sir.

Q129. Then after you run the daytime one week you the next week ran at night? A. Yes, sir.

Q130. And vice versa? A. Yes, sir.

Q131. Who ran with you during the first part of your period over there? A. I could not say the man's first name. We called him "McGinty" Smith. His last name was Smith, I am positive of that.

Q132. Did he work with you or did he work opposite? A. He worked opposite of me. He relieved me. When he came in I went out.

Q133. He ran the machine? A. Yes, sir.

Q134. He was machine tender on the other run? A. On the other shift.

Q135. Do you remember what man helped run that machine with you? A. A fellow by the name of Art Brosius was backtender for me; he was practically my assistant.

Q136. Do you remember anybody else in your crew or shift, whatever you call it? A. I do not believe I can. You see this is a long time ago.

Q137. Who was the boss machine tender? A. At that time, John Alpine.

Q138. When you went into the mill then in the summer of 1905 John Alpine was the boss machine tender? (No answer.)

Q139. What kind of paper were you making? A. News.

Q140. Did you ever make anything but news on the No. 1 machine? A. Not while I was there.

Q141. What were they making on the No. 2 machine? A. News.

Q142. Making news on both machines? A. Yes, sir.

Q143. All the time you were there? A. All the time I was there. We made the St. Paul Dispatch, the Minneapolis Journal and the Minneapolis Tribune.

Q144. About what speed was the No. 1 machine running at that time? A. When I went there she was running,—well, that would be hard for me to say.

Q145. You do not remember? A. I do not remember. We did not talk speed for a long time after I went there.

Q146. Do you remember the construction of the machine, whether there was any means for, on the machine itself, for changing the pitch of the wire on the Beloit No. 1 machine? A. You mean the way it was built when it was put in?

Q147. Yes, when it was put in. A. It was built, it was what they called an adjustable Fourdrinier.

Q148. How was that put on and adjusted, what was the means? A. Well, there was a, what I would call a growser screw at the breast roll end and it was connected by a wheel and bolt that went through just at the breast roll end of the first suction box.

Q149. What was the effect of that, what could you do with it? A. Well, we,—I cannot exactly remember the adjustment, but I think that it would, it would adjust at least three inches above the level, and I never paid any attention to what it would go the other way.

Q150. Did you ever see it adjusted below the level? A. No, sir.

Q151. You don't know how much it would go that way?

A. No, sir.

Q152. Did you ever measure the amount that it would adjust above the level? A. Not with the—not when it was adjusted with the screw.

Q153. When, I mean, adjusted with the screw? A. No, I never did.

Q154. You say what would be your recollection as to the amount? A. At least three inches.

Q155. What would this do, what part of the machine would it raise and lower? A. It would raise the breast roll end that contained the apron and head and slices, and have a tendency to let the stuff slide down hill.

Q156. What would that, the effect of raising that breast roll end of the Fourdrinier, what effect would that have on the wire, what did it do to the wire? A. It would not have much of any effect on the wire at all.

Q157. Raising the breast roll, what would that do to the wire? A. Yes, that would raise the wire; yes, it would put a pitch on the wire. We always figure the pitch from the guide roll to the breast roll.

Q158. You say you could raise the breast roll at least three inches by the screw device? A. At least three inches.

Q159. That would raise the breast roll end of the wire that amount? A. Yes, sir.

Q160. Which end do you generally call the forward end, the breast roll end or the other? A. The breast roll.

Q161. Raising that three inches would raise the breast roll end of the wire that same amount? A. Yes, sir.

Q162. What about the other part of the wire, what about the suction boxes, when you raised this did that raise the suction boxes or not? A. Well, no, it did not.

Q163. Did not raise the suction boxes? A. No, sir.

Q164. They were not on the same rails with the tube that laid in front of the suction boxes? A. No, sir.

Q165. Did you ever know of this screw device being operated to raise the breast roll and the breast roll end of the wire?

Mr. Lyman: Objected to as relating to matters not referred to in the answer, and it is stipulated that the same objection may be regarded as taken to all subsequent questions along this line.

(Question read by stenographer.)

A. Do you mean before that time?

By Mr. Paul:

Q166. Any time after you went there did you know of that being operated? A. Well, yes, I have known of Alpine fooling

with it, but I never paid a great deal of attention to it.

Q167. Did you ever help him or have anything to do with raising it? A. Yes, I helped him.

Q168. What did you do about that? A. I helped him raise it up and leave it there.

Q169. How soon was that after you went there? A. That was some time after I went there. Possibly almost, well, possibly nine months after I went there.

Q170. Did you see the machine operate with the breast roll raised up by the screw device? A. Yes, sir.

Q171. Did you operate it in that condition? A. Yes, sir.

Q172. Do you know anything about whether there was any change in the speed when that was moved up? A. I think there was a change in the speed but I would not say for certain. I know that right at the time it created quite a, the same as any other would, quite a flurry among us fellows. We thought it was quite a thing at the time because the adjustment of the machine had been almost forgotten. It was rusted so we worked pretty hard to get it up there.

Q173. And that created some talk among the men in the mill? A. Well, among us fellows; of course we did not go out much.

Q174. I mean among the men that were working on the machine? A. Yes, sir; at that time. It was soon forgotten.

Q175. Was there anything further done by anybody in reference to the pitch of that machine? If so, what? A. Well, it might have been some time after that that I heard a little bit of talk about them putting more pitch on the Fourdrinier, and one Monday morning I went in there and found my machine pitched up four inches and the screw down level. Mind you, before that we had the screw up probably three inches, that is as far as it would go; and this Monday morning when I went in to work the block was under the Fourdrinier and the Fourdrinier was let down to the center of the screw again so that we had possibly an adjustment of three or four inches, whatever it was on the screw.

Q176. You did not measure the blocks? A. No, I did not.

Q177. You don't know the exact amount? A. No, I would not say the exact amount.

Q178. Do you think it was at least four inches? A. I think it was at least four inches.

Q179. And might have been more? A. Might have been more.

Q180. At that time, what about the suction boxes? A. At that time the suction boxes was not touched.

Q181. That is the first time you saw it? A. No. They were left the way they were.

Q182. Anybody there when you went in and saw the machine? A. Just the boss machine tender, John Alpine.

Q183. Did he say anything to you about it?

Mr. Lyman: Objected to as calling for hearsay.

A. He says, "Look out for things, Jack," he says, "we tore this business up yesterday," and he said, "Look out that it don't leave something inside of the wire that might put it on the bum." The wire causes trouble, you know.

By Mr. Paul:

Q184. Did he say anything about the purpose of giving this pitch to the wire? A. No, not at that time, because on Monday morning,—of course it is not up to the boss machine tender but it is up to the machine tender to get the best run he can.

Q184a. I just want to know as to whether he did say anything,—you say he did not? A. He did not say anything then until after we got started up.

Q185. Did he then, after you got started up, did he give any reason for this change?

Mr. Lyman: Same objection.

By Mr. Paul:

Q186. Explain to you why he had made the change? A. No, he did not right then.

Q187. Well, did he at any time? A. He did after a little.

Q188. How soon after? A. I had shut down to trim the corners of the apron off in order to get the edges up, the edges of the sheet was light.

Q189. Then what did he say to you, what explanation did he give? A. He told me,—

Mr. Lyman: The same objection.

A. He says, "On account of raising the Fourdrinier," he says, "That is the reason you cannot get the edges up, and we will have to shut down and remedy the apron."

By Mr. Paul:

Q190. Did he say why he had raised up the Fourdrinier?

Mr. Lyman: Same objection.

A. Well, he said to get as good a formation with more speed.

By Mr. Paul:

Q191. As good a formation as what? A. With more speed.

Q192. As good a formation as he had had before? A. Yes, sir.

Q193. How long did they continue to run that machine on those first, that first blocking? A. About one week, to my best recollection.

Q194. Did you work there all the time during that week? A. I worked daytimes that week, yes.

Q195. What did you find as to speed, was the machine speeded up? A. Well, it was speeded up some, yes, sir. We had a Corliss engine that had about 100 feet range on it.

Q196. You could change the speed at any time? A. Yes, sir.

Q197. Do you know about how much the speed was increased that first week with the first blocking? A. No, sir, I could not say that.

Q198. You know there was some increase? A. There was some increase, yes, sir.

Q199. What was next done with reference to changing the pitch? A. The next Sunday, according to my recollection, we raised it up to nine inches.

Q200. Nine inches in all? A. Yes, sir.

Q201. What did they do about the blocking? A. They had blocked it up to nine inches. The screw was left in the center because on account of the screw and the Fourdrinier being heavy the machine apparently would be on stilts if the screw was not down, you know, so there was nine inches of blocking under it.

Q202. Then what was done about the speed of the machine, if anything? A. Well, I think it run possibly a couple of weeks like that and was raised up to eleven inches.

Q203. What about the speed, was there any change in the speed? A. The speed was increased from,—they told me when I went there,—of course a fellow going on a job new things was strange and they might have told me things that was not true, but they told me the machine was running 418 feet a minute when I went there. After we got it up to eleven inches it ran 550 feet and one afternoon we ran 575 but we could not dry the paper.

Q204. Leaving out what you were told, you do know that the speed of the machine was increased? A. Yes, sir.

Q205. It was run faster, was it? A. Yes, sir.

Q206. And do you know that it was run as high as you have said? A. Yes, sir, I know it was.

Q207. Did you count it yourself? A. Yes, sir.

Q208. How did you get the speed? A. By counting the turns of the dryers.

Q209. You did that yourself? A. I did that myself, yes, sir.

Q210. You know the speed was 550 feet? A. Yes, sir.

Q211. After the blocking was put in. Where was Eibel during this time while this machine was being blocked up? Was he still working for the company? A. Yes, sir, he was superintendent there.

Q212. Who was directly over you in the operation of the mill? A. John Alpine.

Q213. What was his position? A. Boss machine tender.

Q214. Who gave you your instructions for running the machine? A. John Alpine.

Q215. Did you have any instructions from Mr. Eibel at all during that time? A. No, sir.

Q216. Did he ever give you any suggestions about running the machine? A. No, sir.

Q217. Increasing the speed? A. No, sir.

Q218. Or anything about improving the paper, anything of that kind? A. No, sir.

Q219. Did you still see considerable of Eibel after you came there to Rhinelander? A. Yes, sir I saw him considerably.

Q220. Around with him at that time? A. I was with him sometimes, yes, sir.

Q221. Did he ever make any suggestion to you that raising the blocking of the machine had been done by or at his suggestion? A. Not for some time after it had been done.

Q222. Did he at any time? A. Well, he did at the time the Nashua Machine Company was putting in those hydraulic wet machines.

Q223. When was that? A. That was during the summer of 1902, shortly after the machine had been blocked up.

Q224. Was that while,— A. In the fall of 1906.

Q225. How long did Alpine remain there at that mill? A. Why, I could not say how long he was there at the mill, but he was there about one year after I went there.

Q226. I mean after you went there? A. About one year, I should say.

Q227. How long was he there after the machines were blocked up? A. It would be pretty hard for me to tell.

Q228. Do you remember when they were blocked up, do you know how long it was after you went there? A. Yes, it was a year after I went there.

Q229. Before they were blocked up? A. Yes, sir. Almost a year.

Q230. You have not any way of fixing that date, have you? A. No, sir.

Q231. Alpine did leave sometime the next year? A. Yes, sir.

Q232. After you went there. Sometime the early part of the summer of 1906? A. 1906.

Q233. Do you know how long it was before Alpine went away that these machines were blocked up? A. They were

blocked up while Mr. Alpine was there.

Q234. Do you know how long before he went away that they were blocked up? Do you know how long he was there after they were blocked up? A. No, I could not say truthfully.

Q235. Was there any change in your position when Alpine went away? A. Yes, I was made boss machine tender.

Q236. You took his place? A. Yes, sir.

Q237. And did the machines continue to be operated blocked up? A. Yes, sir.

Q238. Now, when did you first learn of any steps being taken towards patenting this change or any change in the pitch of the machine? A. Why, I could not say the date. I know it was sometime after the machine was blocked up. We did not of course—right at the time it was blocked up we thought a considerable of it, but it died down in a few weeks.

Q239. What was the first you heard or saw about any steps being taken to patent it? A. At that time they were putting those hydraulic wet machines in, built by the Nashua Machine Company, and one day Eibel came to me and told me he thought he would get the idea patented. I won't say for certain whether he told me that one of these men, either Mickey, I don't know his first name, I did know at the time but I have forgotten it, or this other gentleman, Charley, I can't think of his name now, put it in his head to have it patented. I won't say whether they did this or not.

Q240. That is what he told you? A. That is what he told me, and I always supposed that the idea originated from that.

Q241. That was after you became boss machine tender? A. Yes, sometime after.

Q242. And after Alpine left there? A. Yes, sir.

Q243. How long did you remain the boss machine tender there at the Rhinelander mill? A. About one year.

Q244. Then what did you do? A. I was on the road for the Eibel Process Company, and part of the time while I was boss machine tender there.

Q245. How long were you on the road? A. Until November, 1907.

Q246. When you were on the road for the Eibel Process what do you mean, what were you doing? A. Well, I was working at that time for the Stone & Webster Company; they were sending me out to different mills. We only tried it on I believe five different plants.

Q247. At that time? A. But the idea was new and they were trying to make the people acquainted with it.

Q248. And that was your work? A. Yes, sir.

Q249. What did you do after that, where did you go? A. Kansas City, Missouri.

Q250. When was it you went to Kansas City? A. In the beginning of 1908.

Q251. What did you do in Kansas City? A. Run a machine.

Q252. For whom? A. For the Kansas City Star.

Q253. That is a newspaper, the Kansas City Star? A. The Star and Times.

Q254. They have their own paper mill? A. They did at that time.

Q255. And you ran a machine there? A. Yes, sir.

Q256. What make machine? A. Rice, Barton & Fale.

Q257. More than one machine? A. They had two. Both the same make.

Q258. How long did you stay there? A. Until 1911.

Q259. Then where did you go? A. To Lincoln, Kansas. I went to work for the Katahden Pulp & Paper Company.

Q260. You were with them until what time? A. Until 1914.

Q261. Then what did you do? A. I came back here and went to work for the, at the Raquette River Paper Company at Potsdam, N. Y.

Q262. How long did you work for them? A. Sixteen months.

Q263. Then where did you go? A. I went out on strike there and then I came down here to Watertown and worked in the C. R. for a time. It belongs to the International.

Q264. Then where did you go? A. I went to Augusta, Maine.

Q265. How long were you at Augusta? A. I was there four months and a half.

Q266. That was what year? A. That was in 1916 and '17.

Q267. Then where did you go? A. I came back to Pyrites and worked for the New York World.

Q268. What is the name of the concern there? A. The DeGrasse Paper Company.

Q269. That is where you are working now? A. Yes, sir.

Q270. You have been since what time, last March? A. Since last March, sometime the beginning of March.

Q271. How many machines are there at the DeGrasse Paper Company? A. Four.

Q272. What make? A. No. 1 is a Rice, Barton & Fale. No. 2 was almost anybody's make.

Q273. I asked you that question before, didn't I? A. Yes, sir.

Q274. You may state it. A. It is almost all Bagley &

Sewall now, because Bagley & Sewall has built it up until it is almost all Bagley & Sewall.

Q275. What are the other two? A. Bagley & Sewall.

Q276. Which machine do you run? A. No. 1.

Q277. Which is that, which make? A. Rice, Barton & Fale.

Q278. What is the width of that machine? A. 132 inches.

Q279. And the length of the wire? A. 69½ feet.

Q280. Any pitch used on these machines in the DeGrasse mill? A. There is about eleven inch pitch on No. 1.

Q281. On No. 2? A. I never measured it but I would say there was about four or five inches on 2.

Q282. No. 3? A. No. 3, the boss machine tender or the tour boss the other night in particular told me there was only five or six inches pitch on No. 3.

Mr. Lyman: I object to that as hearsay.

By Mr. Paul:

Q283. Have you seen the machine yourself? A. Yes, sir.

Q284. And from your own observation and examination of the machine what amount of pitch would you say there was? A. I would say there was not more than five or six inches of pitch.

Q285. What about No. 4? A. I think it is about 14 inches.

Q286. You work on No. 1? A. Yes, sir.

Q287. And No. 2 is next to you? A. Yes, sir.

Q288. You work between the two machines? A. No, sir. My machine is next to the wall; then comes No. 2, then No. 3 and 4.

Q289. Where is the working side of your machine? A. That is towards No. 2.

Q290. That is what I mean. You are between the two machines? A. Yes, sir.

Q291. Generally? A. Yes, sir.

Q292. When you are at work? A. Yes, sir.

Q293. So you can see the No. 2 machine? A. Yes, sir.

Q294. And you see it every day? A. Yes, sir.

Q295. What is your best recollection as to the amount of the pitch on the No. 2 machine? A. Well, I would say it was four or five inches.

Q296. The No. 3, how does that compare with No. 2? A. About the same.

Q297. And No. 4 is more? A. Yes, sir.

Q298. How much do you think that is? A. I would say about 12 or 14 inches.

Q299. How fast does your machine run? A. 540.

Q300. What is the pitch on that? A. About 11 inches.

Q301. Do you know how fast the No. 2 runs? A. No. 2 runs about 460.

Q302. That is with the five inch pitch? A. Yes, sir.

Q303. How fast does No. 3 run? A. I have seen it about 620.

Q304. You have counted it yourself? A. Yes, sir.

Q305. What does it average? A. O, it averages around 585. Of course, it depends a good deal on the stock. We have got to baby that a good deal. Of course now days the material they are putting is is not any too good, you know, and we use a good deal of Canadian spruce pulp. Sometimes we pull off some pretty bum cooks there and we have got an excuse for slowing down in order to get by.

Q306. On the average No. 3 runs about what? A. I would say it run about 580, 85.

Q307. You have seen it run up to 620? A. Yes, sir.

Q308. Do good work at 620? A. Yes, make a nice looking sheet.

Q309. That is with the five or six inch pitch? A. Yes, sir.

Q310. How fast does No. 4 run? A. No. 4, I have seen that up, the fastest, 635.

Q311. What kind of stock do you use there at the DeGrasse mill? A. Well, we have eighteen grinders running with electricity that get the power from the Hannawa Falls Power Company. Then we have three grinders there that run with the power they have themselves; the water-power they have themselves. That would make 21 grinders. The rough ground wood they use is what we call Canadian spruce pulp. When we cut it it is dry, it is as hard as a bone, and we have what we call a shredder there, a hook (?) that it goes into and gets down into a chest and the water is pumped in, and of course we have a chaser (?) in that that stirs it up and soaks it about half through; and they use, a good average is 500 pounds of sulphite to a 1,500 pound beater. Well, the sulphite they figure 40 per cent dry, so you will see it is not a very big percentage.

Q312. Do you use any old paper? A. Yes, we use all the old editions that the New York World does not sell, and they buy some, too.

Q313. What proportion of the old paper do you use? A. About one beater of old paper to five beaters of raw stock.

Q314. Now, this stock that you have described, is that what was used on those machines they run at the speed you speak of? A. Yes, sir.

Q315. That was stock that was being used on the No. 3 when you were running it at 620? A. Yes, sir. We could not mis-

take that on account of the ink getting in the clothing, especially jacket. We had to use kerosene to get it out. I myself use probably half a barrel of kerosene in eight hours to take the ink out of the jacket alone.

Q316. That is the ink from the printed paper? A. Yes, sir.

Q317. Do I understand these machines all make news print paper? A. Yes, sir.

Q318. And the paper for the New York World? A. Yes, sir.

Q319. I take it, from what you say, you were not present on either of those Sundays there at the Rhinelander mill when those machines were blocked up? A. No, sir, I was not.

Q320. Do you know whether the No. 2 machine was blocked at the same time as No. 1? A. I know it was not.

Q321. It was not? A. It was not.

Q322. No. 1 was blocked first? A. Yes, sir.

Q323. How much before No. 2 was blocked up? A. We got No. 1 up 9 inches before they ever touched No. 2 at all.

Q324. While you worked at Kansas City were the machines you had there blocked up? A. We blocked them up while I was there.

Q325. How much? A. About eleven inches. I was to blame for that. That was my argument.

Q326. You suggested it, did you? A. Yes, sir.

Q327. Were these machines at DeGrasse all blocked up as they are now when you came there? A. Yes, sir.

Q328. There has been no change made since you came there? A. No, sir.

CROSS EXAMINATION.

By Mr. Lyman:

XQ329. Are the license plates on the DeGrasse machines showing that they are licensed under the Eibel patents? A. No. 1 is. I never looked at the others.

XQ330. It may be so far as you know? A. It may be so far as I know.

XQ331. What is the name of the company at Kansas City? A. The Kansas City Star and Times; but they own no mill there now. They sold the machines in there to Spanish River.

XQ332. The Spanish River Company? A. Yes, sir. They sold them to the Spanish River Company.

By Mr. Paul: The Spanish River Company in Canada?

A. Yes, sir.

By Mr. Lyman:

XQ333. Where are they located? A. Sturgeon Falls, I think is the place.

XQ334. The factory, the paper mill, was located at Kansas City, however? A. Yes, sir.

XQ335. Please tell us now just as near as you can when it was that you went to Rhinelander? A. It was in 1905.

XQ336. What part of the year? A. In the spring of the year, possibly in the beginning of April, as near as I can get to it. It was a long time to remember.

XQ337. And when was it that you become boss machine tender? A. In about a year afterwards; maybe a month or two later than a year.

XQ338. That would be in the spring of 1906? A. Yes; I think it would be better to put it about the first of July, 1906.

XQ339. Now, just when was it that the first blocking was put under the No. 1 machine? A. Why, I could not say; I could not remember that.

XQ340. Would it be in the year 1905 or 1906? A. That would be in 1905.

XQ341. Were these changes made up to the eleven inch pitch in the year 1905? A. Yes, sir.

XQ342. They were? A. No; no, they was not.

XQ343. How many of them were made in 1905? A. No, there was not any I think made in 1905, because I went there in 1905, early in the spring, and this was not talked about for a long time after I went there.

XQ344. How long? A. O, possibly almost a year.

XQ345. In the spring of 1906, would you say? A. Yes, sir.

XQ346. Before anything happened at all? A. Yes, sir.

XQ347. Now, was there any change made in the blocking after you took charge as boss machine tender? A. No.

XQ348. And eleven inches was as high as the blocking went? A. Was the highest it went.

XQ349. Had the No. 2 machine been blocked up at the time you took charge as boss machine tender? A. Yes, sir.

XQ350. When was the blocking put under the No. 2 machine? A. About the same time that it was done on No. 1, possibly a week or two later.

XQ351. How high was the No. 2 machine blocked up? A. Nine inches was the highest they ever went.

XQ352. While you were there? A. Yes, sir.

XQ353. Eibel always gave his orders to his superintendent, Alpine, I suppose? A. The boss machine tender, yes, sir.

XQ354. And he did not ever give orders to the machine tenders or back tenders? A. No, sir; not that I know of.

XQ355. When was it you started out on the road for the Eibel Process Company? A. You mean the first time I did

any work for them?

XQ356. Yes. A. Outside the Rhinelander mill?

XQ357. Yes. A. I believe it was in January, 1906; I went to, or January, 1907, I went to the Cascade mill in Berlin, New Hampshire, and put blocking under,—well, first I was supposed to put under two at the Cascade, that is the big machine, and it is 164. After Billy Corbin, the manager, found out what it was and he says, "Jack, I don't want to take the chances until we try it out on the little one." Why, he was manager over the two mills and first we tried it on that 96 inch machine in the old Berlin mill one Sunday. The next Sunday we put it under No. 2 in the Cascade.

XQ358. The Cascade was the name of one of the mills owned by the Berlin Mill Company? A. Yes, sir. That is out of Berlin about a mile.

XQ359. At Gorham, New Hampshire? A. Yes; at Berlin, New Hampshire.

XQ360. That is practically the same? A. Between Berlin and Gorham.

XQ361. There has been reference to the paper machines at the Berlin mill, that is the same one? A. Yes, sir.

XQ362. When you went there in January, 1907, were the wires flat? A. Yes, sir.

XQ363. How high pitches did you put in there? A. Fourteen inches at the Cascade mill and eleven at the old Berlin mill.

XQ364. Did you raise the speed of these machines at that time? A. I left right after the work was done in the Cascade mill; I left the same day the work was done, and afterwards I wrote to one of the machine tenders there and asked him to tell me how much they did increase the speed and I never got an answer from him.

XQ365. You never saw the machines after so you don't know? A. No, I never seen them again.

XQ366. By that time, that is by the time you put in this pitch up to the Berlin mills, had the news manufacturers around the country adopted this idea pretty largely? A. No, not that I know of.

XQ367. Do you know how soon they began to after that? A. I could not say; no, sir.

XQ367a. Why was it you put in the pitch at the Kansas City mill? A. Well, because I was used to it and I liked it.

XQ368. What are the advantages of it? A. Well, you get a flatter, evener sheet at more speed, not a better looking sheet, but an evener sheet.

XQ369. How much of an increase of speed can you ordinarily get by putting in a high pitch, a matter of 25 per cent? A. No, not that much.

XQ370. How much? A. Well, we was running about 420 at Rhinelander, and after we put in the pitch we figured up to 550, and that was all we could dry. At one time we got it about 575 but we could not dry it. In the meantime I had to alter some things in order to get by with that speed.

XQ371. Is that about a typical or average case of what you can do with the pitch? A. Yes, sir.

XQ372. You never measured, did you, the exact amount you could raise that Rhinelander No. 1 machine by the adjustment above the level? A. No, I never did.

XQ373. Was the No. 1 machine and the No. 2 machine alike in that respect? A. They were, yes, sir.

XQ374. No difference between them in the amount of the adjustment? A. They had an adjustable Fourdrinier frame.

XQ375. They were arranged in just the same way? A. Yes, sir.

XQ376. Did you tell us the speed on the No. 2 machine that was used at Rhinelander while you were there? I forget. A. No, I never did.

XQ377. Will you tell us? A. They used to run about 480. The machine was not built for that speed, anyway, and the back line would not stand it; that is the driving train; and sometimes when a machine tender got about half a glass of that brass polish too much he would go in and speed up a little and would smash things. So 480 was about all No. 2 would stand.

XQ378. That was as high as you raised the speed after you got in the nine inch pitch? A. Yes, sir.

XQ379. What was the reason, did you say, that Corbin wanted to try that pitch out on the small machine rather than on the large? A. He did not have much confidence in it; that is, he did not want to disturb a big machine with it until he was sure that it was a success.

XQ380. You mean it struck him as a surprising height? A. No, it did not.

XQ381. What do you mean? A. He said if he had known it was anything so simple that he would never had me come out there at all.

XQ382. He did not realize that it could be done? A. Well, no.

XQ383. Was that the attitude of paper makers generally at that time, that is, they were skeptical about whether you could get such pitch and make the machine go? A. No, it did

not seem to be, but there is an awful lot of jealousy among paper makers, you know, and you take a,—like me, if a younger man tells me anything I have not heard of before, on account of my being in the business so many years, why, I do not like to listen to it, you see. It is a trade apart by itself. It is something different from other trades, although it is a trade just the same.

XQ384. They did not like to be under obligations to Eibel for this new idea? A. I could not say whether it was about Eibel, but they did not like to be under obligations to me, even.

XQ385. What are the heads they carry behind the slices on the DeGrasse machines? A. That would be hard for me to say. They did carry on No. 1 about 3½ or 4 inch head. They will vary half an inch.

XQ386. Do you know what they carry on No. 2? A. No. 2, about the same, about 3 inch head on No. 2. No. 2 is about the steadiest machine in the mill.

XQ387. No. 3, what do they carry? A. That carries about 4 inch; 4½ inch head.

XQ388. No. 4? A. No. 4 carries a high head.

XQ389. How high? A. Probably up to six inches; but that is a good deal the fault of the machine tender.

XQ390. Why do you call it his fault? A. Why, it is just his idea, you know; that is up to the machine tender, just as he happens to feel about carrying the head.

XQ391. You don't mean it was anything to be blamed for? A. No, nothing to be blamed for; it is just the working conditions of what he thinks the working conditions should be. He might think he could get a better looking sheet with a 6 inch head and we would change tours at three o'clock, I might come in at three o'clock and think I would get a better looking sheet with 4 inch head.

XQ392. Where did you work at Augusta, Maine? A. For the Cushnick Paper Company.

XQ393. Were they making news? A. No, sir: manilla.

XQ394. Where did you work at Watertown did you say? A. I worked for Mr. Hazel just a little while just around the mill doing almost anything. I came out on strike from the Raquette River Paper Company.

XQ395. When was that? A. Last spring, in May.

XQ396. And did you work at Glen Park or at Watertown? A. Glen Park.

XQ397. What was the condition of the machines there at that time? A. I never paid no attention to them.

XQ398. You don't know whether they had a pitch or not?

A. No, sir.

XQ399. How long did you work at the Raquette River Company? A. Sixteen months.

XQ400. How many machines did they have there? A. Three.

XQ401. Did they make news? A. No, sir.

XQ402. How long did you work at the Katahden Paper Company? A. About four years.

XQ403. Did they make news there? A. No, sir; manilla, manilla envelope and quite a lot of government paper.

XQ404. Did you get an increase of speed in your machine at Kansas City by putting in the pitch? A. Well, it increased the speed a little.

XQ405. How much? A. But not very much. Probably 25 feet. We could not dry any more, anyway, but we figured that the machines would run better.

XQ406. Got a better formation? A. Yes, sir. I don't know as we did. You see they had a Stevens plant in there, used an awful lot of old papers, and the Kansas City mill is a kind, was a kind of peculiar proposition. We was bothered with water, and it was a long ways to transport the raw material and it never was a success from the time the mill was built.

XQ407. You said something about the Nashua Company putting in some hydraulic machinery at Rhinelander? A. Yes, sir.

XQ408. What was that? A. They put in two hydraulic wet machines, supposed to take the sulphite off a certain percentage dryer than a common, ordinary wet machine; I could not say what percent dryer.

XQ409. When did they put those in? A. Well, they were putting them in in the winter and spring of 1905, and in the summer of 1905; it took considerable time. These had a foundation to be built for the wet machines and they made new sills, made several trips there that I know of.

XQ410. It was while they were putting that in that Eibel first spoke to you about getting a patent on this thing? A. Not exactly while they were putting it in, no; after it was all in. It seems they sold paper mill supplies of different kinds, too.

XQ411. How soon after they got it in was it that he spoke to you about getting the patent? A. O, possibly six or eight months after.

XQ412. And how do you associate those two things in your mind? A. Well, it is pretty hard for me to remember that far.

XQ413. I know, but when you spoke about his telling you

he was going to apply for a patent on this invention you said that it was associated in your mind, as I understood you, with this putting in of the wet machinery by the Nashua River Company? A. Yes, sir. Well, at that time this Charley Morrison and Mickey, this man Mickey, used to come to Rhinelander quite often, and Eibel being, was quite fond of music and he had an Edison phonograph and these fellows was pretty good singers, and why I can remember so well he made a number of records, he and this man Morrison, and I won't say whether Mickey was ever mixed up in the records or not, but I can remember that very well.

XQ414. What kind of blocks did they put under the machines, under the breast roll under the machines? A. They were made of, I would call them Norway pine.

XQ415. You say that the suction boxes were blocked up together with the rest of the machine? A. Yes, sir. The stand under the suction boxes was blocked up.

XQ416. Was that done every time any blocking was put under there? A. Yes, sir.

XQ417. I understand you to say that when the screw was raised to put the breast roll in its topmost position without any blocking it made the machine unstable or unsteady? A. Well, it naturally would on account of, it would apparently put it up on stilts. The screw was a little too light for the weight of the Fourdrinier. It didn't do any harm, only it would probably shorten the life of the Fourdrinier; there would be more repairs made on it by putting it up there that way. The screw was too light.

XQ418. It would not be good practice to keep it up to the topmost position? A. No, it would not. In time we would have to renew the screw, probably in a short time.

XQ419. When that adjustment was made, when the breast roll was raised to the topmost position that you could by means of the adjustment without any blocking, could you notice any difference in the formation of the sheet by such a slight adjustment as that? A. Yes, you could notice a considerable difference.

XQ420. I believe you said that the first blocking that was put in raised the breast roll about four inches? A. Four inches; just about.

XQ421. Did that make considerable more difference than the adjustment that had been used before that? A. No, about the same; that is, you mean the difference between that and the screw?

XQ422. Yes. A. No, about the same.

XQ423. After the screw was raised up to its topmost position was it dropped back again? A. Yes, we put it back.

XQ424. How long did it stay up to the topmost position? A. A week.

XQ425. And then was the machine run on a level for a while after that? A. No.

XQ426. Then the next Sunday the four inch blocking was put under there? A. Yes, sir.

XQ427. Do you say that adjustment had never been used before that time? A. I don't know whether it had or not. I know it was awful hard to use. You see it is not geared right, and it is hard for two men to adjust the machine four inches in one hour with that adjustment.

XQ428. You don't know whether Wood had ever tried using any adjustment? A. No, I never was there when Wood was there.

XQ429. Do you know whether this Eibel idea spread pretty rapidly throughout the paper trade about 1907? A. No, it did not. They advertised it in the Paper Trade Journal and in the Paper Mill at that date, but outside of that it did not spread much.

XQ430. At the time when the Rhinelander machines were put in and when you went there they were running about 400, did you say? A. No. 1 was running 418 and I should say No. 2 was going about 400.

XQ431. That was pretty good speed in those days for paper machines? A. No, it was not; but we thought it was there, you know, but out east here of course they always had it all over us people in the west. The same build of machines and on the same level would probably be running 100 feet faster than we would.

XQ432. You are speaking of your own personal knowledge or simply what you heard? A. No, it was simply what I heard from some paper makers coming through there.

Mr. Lyman: We are not interested in what you heard; only what you knew yourself, so I object to that.

Mr. Paul: The question rather brought that out. You asked him about spreading. He will have to answer that he would not have personal knowledge.

Mr. Lyman: The preceding answer is objected to as based on hearsay.

XQ433. When you used this Eibel pitch right, I mean with proper relation between the speed of the wire and the pitch, is your drainage improved? A. Yes, sir.

XQ434. That is, the water drains through more quickly than

it otherwise would? A. Yes, sir.

XQ435. Now, had you ever, before you went to the Rhinelander mills, seen any of these adjustments, screw adjustments, provided in any machine? A. Yes, sir.

XQ436. Where? A. At Tomahawk and at Macuth-, Wisconsin.

XQ437. Those provided for running up hill slightly? A. Yes, sir.

XQ438. Or slightly down hill? A. Yes, sir.

XQ439. Had you worked on bag paper before you went to Rhinelander? A. No, sir.

XQ440. Did you ever work anywhere at Potsdam than at the DeGrasse Paper Company? A. The DeGrasse mill is at Pyrites. Potsdam, the Raquette River Paper Company mill is.

XQ441. Did you ever work anywhere except at the Raquette River Company? A. Yes, sir, I worked in the Unity mill about four months.

XQ442. When was that? A. Last summer.

XQ443. 1916? A. Yes, sir.

XQ444. Did they make news there? A. No, sir; they make bag and bond there. That is strictly an International Brotherhood mill; that is, they put the International Brotherhood's water-mark on the sheet. No pitch there at all. It is a very slow machine and they make a fine grade of paper.

XQ445. Why was it you left the employ of the Eibel Process Company? A. Well, Eibel said a number of things to a man by the name of Mitchell against me and it did not make me feel right because I felt I had done a great deal to help Eibel along.

XQ446. There was friction between you and Eibel? A. O, there was not up until the time it was told me in Lee, Massachusetts. On my part I liked Eibel well enough, but he seemed to like me to my face but he did not like me behind my back.

XQ447. Did he discharge you? A. No, sir.

XQ448. Did you ever claim to have made this invention yourself? A. No, sir.

RE-DIRECT EXAMINATION.

By Mr. Paul:

RDQ449. Had Eibel ever made any remark to you about having, the idea of having you take out a patent? A. He did; yes, sir.

RDQ450. What was it he said then? A. He said to me at the time that Mickey did this work for the Nashua Machine Company,—he seemed to be in fear of Mickey for some reason,—and one afternoon in the machine room at Rhinelander he

said to me: "Jack, I have a notion to assign all of this over in your name until I get rid of Mickey. I do not know what he will do." I never knew really how Mickey stood with him.

RDQ451. You never made any claim or suggestion that this belonged to you, or any part of it? A. No, sir.

RDQ452. You said the adjustment of the No. 1 and No. 2 machines there at Rhinelander was alike? A. Yes, sir.

RDQ453. Did you ever try the No. 2 to see how much it would adjust? A. Not that I remember, no.

RDQ454. So you don't know whether it would adjust as high as No. 1? A. No, sir.

Mr. Paul: You waive signature on this?

Mr. Lyman: Yes.

Adjournment until tomorrow morning at 10 a. m.

June 20, 1917. 1:30 p. m.

CLARENCE E. KINNEY

sworn for defendant:

By Mr. Paul:

Q1. What is your name? A. Clarence E. Kinney.

Q2. What is your age? A. Forty-eight years.

Q3. Where do you live? A. Watertown, N. Y.

Q4. With what company are you now in business? A. The Bagley & Sewall Company.

Q5. What is your business in that company? A. Secretary and mechanical engineer.

Q6. How long have you been connected with the Bagley & Sewall Company? A. Twenty-four years and four months.

Q7. What is the business of that company? A. The design and manufacture of paper making machinery.

Q8. What kind of paper making machinery does that include, in a general way? A. That includes the pulp making machinery and machinery for making all grades of paper and the auxiliaries that are required.

Q9. That includes what are known as Fourdrinier machines? A. Yes, Fourdrinier and cylinder machines; in fact, all machines are of those two classes.

Q10. What, in a general way, has been your particular line of work with that company from the time you first began? A. Well, it has been the, at first it was drafting, and then the designing, and in later years it has been the making of specifications and estimates.

Q11. You are familiar with the mechanical construction of

machines that this company manufactures? A. Yes, during the time that I have been there.

Q12. And all that they manufacture at this time? A. Yes, sir. I said at present I was working on the estimate and specification but I also have the general say of the design. Mr. Martin you met this morning is in direct charge of design but if there is any question it comes to me for my opinion.

Q13. You are in general charge of the construction of the machines? A. And design, yes.

Q14. Construction and design? A. Yes, sir.

Q15. You said you had been with this company twenty-four years, that carries it back to about what year? A. I went there the 27th day of February, 1893.

Q16. Did this company at that time manufacture Fourdrinier machines? A. Yes, sir; had been since 1889.

Q17. At the time you began working for this company in 1893 what was the speed at which these machines were designed to run? A. Well, usually about 250 to 300 feet.

Q18. What length and width of wire was usually employed? A. Why, the widest machine at that time was 120 inches. I think the wire was 45 feet long; either 40 or 45.

Q19. Did this company at that time also manufacture dryers? A. Yes, sir.

Q20. For use with these machines? A. Yes, sir.

Q21. And about what size and how many dryers were ordinarily put into the machine at that time? A. Well, the dryers would usually run from about sixteen to twenty dryers, 48 inches in diameter. That was the standard dryer.

Q22. Does the company manufacture steam engines? A. No, sir. We went out of that in 1876.

Q23. In the original machines as manufactured in 1893 what was the position that was usually employed for the making wire, that is, the position as to the pitch? A. Usually laid up from level to ¾ of an inch below level.

Q24. How long did that continue to be the practice? A. That continued,—

Mr. Lyman: I think perhaps I better put in my objection. The question is objected to as dealing with matters for which no foundation is laid in the answer. It is stipulated that this objection may be regarded as taken to all subsequent questions along this line without further objection.

A. Until about,—now, this is approximately, somewhere between 1895 and '6; it might have been 1895 and 1896, possibly 1897; I think 1896, we changed it that year from level to an inch and a half below level.

By Mr. Paul:

Q25. And had any change been made in speed during that period? A. Well, at that time the speed began to increase; that is, when they began to talk about making 325, 350 and 400 foot paper, then the speed began to come up. But I want to tell you right here we only made two or three machines with that pitch of an inch and a half below level, then we began going to level and above level.

Q26. When was your attention first called and by whom to this kind of a change from the downward pitch? A. Well, it was approximately 1895 or 1896 at the time we were building two machines for the Piercefield Paper Mill Company, Mr. C. R. Remington was in the office and saw that design and said: "You fellows are wrong on that, you are going the wrong way, but you want to increase or get the breast roll up so that the water is running faster or running as fast as the wire."

Q27. Did you hear him make this statement? A. He said it to me.

Q28. Any change made following this suggestion of Mr. Remington? A. Soon after that, I cannot say exactly when, soon after that we began to get the breast roll so we could raise above level. At first it was a small amount, say an inch, and gradually it got up to three inches, that I showed you on that drawing this morning.

Q29. I rather you would not refer to what you showed me outside. A. All right, sir.

Q30. What change in speed was obtained when you made the change in pitch that you have referred to? A. I cannot give you the exact number of feet speed but it was a gradual increase, it got going faster all the time.

Q31. You did increase the speed? A. Yes, sir.

Q32. When you changed the pitch? A. Yes, sir. Of course perhaps this is immaterial to what you want to know. About that time there was great controversy all over the country as to how fast it was possible to make paper, and these old paper makers would tell you you could not form a sheet faster than 350 or 400 feet a minute.

Q33. Did you have competition at that time in the manufacture of machinery? A. O, just the same as now.

(No Q34.)

Q35. What were some of the principal companies that were manufacturing Fourdrinier and other paper machines at that time? A. Well, Pusey & Jones Company of Wilmington, Delaware; Rice, Barton & Fale Company of Worcester, Massachusetts; Beloit Iron Works Company of Beloit, Wisconsin, Black

& Clawson of Hamilton, Ohio; J. H. Horne & Sons of Worcester, Massachusetts, and there are three or four others, but whether they were making Fourdriniers at that time or just cylinders I am not sure.

Q36. Did you keep posted on the progress in the matter of speed made by your competitors at that time? A. I surely did.

Q37. Did you learn of any machines being put on the market that ran as high as 500 feet per minute?

Mr. Lyman: When are you talking about?

Mr. Paul: I will find out first if he learned it and then when.

Mr. Lyman: The question is objected to as calling for hearsay.

A. Well, at that particular time that we spoke of there?

By Mr. Paul:

Q38. First, the question is, did you learn of that at any time, did you ever learn of it? A. Now, Mr. Paul, just a minute. There is one of the questions you cannot say yes or no to. At these particular dates I was talking about you never heard of 500 feet.

Q39. The question is, Mr. Kinney, did you ever hear of it, of machines on the market that made 500 feet per minute? A. Now, in 1896, you mean?

Q40. No, did you ever hear? A. That is, today?

Q41. Have you ever heard of machines that made 500 feet per minute? A. Yes, sir.

Q42. Now, when first? When did you first hear of machines or know of machines that ran at a speed of 500 feet per minute?

Mr. Lyman: Objected to as calling for hearsay.

A. I have positive knowledge that in 1898, 1899, that I saw machines running 500 feet.

Q43. Now, where were those machines? A. Well, one was at Palmer Falls.

Q44. What make machines were those? A. Pusey & Jones.

Q45. Had you at that time manufactured machines that ran as fast as that? A. I do not think so. No, I do not think we had machines running 500 feet in 1898.

Q46. Did you personally see these machines running at that speed? A. Yes, sir.

Q47. And did you count them or determine the speed yourself? A. I did.

Q48. Were they going any over 500 feet, do you recall? A. As I remember it was approximately 512 feet.

Q49. Do you recall the position of the making wire on those

machines, whether they had any pitch or not? A. I do not.

Q50. Do you recall whether there was any blocking on the machines? A. I do not remember that.

Q51. What was the name of the company that then operated the Palmer Falls machine, do you recall? A. I think it was then the International Paper Company, as I remember it.

Q52. Do you know what company had originally operated that mill? A. The Hudson River Paper Company, I think they called it. You must know that of course it was Warner Miller's mill or Warren Curtis' mill. It was always known as the Hudson River mill.

Q53. Were you at any time prior to say 1902 familiar or did you ever see in any mills the blocks used under the standards of the machines? A. Yes, sir.

Q54. Do you recall any particular mill in which you saw that blocking used? A. I could not say just which mills. I have seen it in various mills.

Q55. And prior to 1902? A. I think so.

Q56. Did you personally design for your company any structure that permitted a pitch to be given to the making wire? A. Yes, sir.

Q57. When did you first do that, as far as you recall? A. Somewhere between 1902 and 1904.

Q58. Were machines built in accordance with such design? A. Yes, sir.

Q59. Do you recall any mills in which such machines were put in? A. I recall four that were built in 1904. I cannot tell you exactly about in 1902.

Q60. Have you any drawing showing such design? A. Yes, sir.

Q61. Have you such drawing here? A. Yes, sir.

Q62. Will you produce it? (Witness produces drawing.)

Q63. You have produced two sheets of drawings? A. Yes, sir.

Q64. Are these drawings dated? A. Yes, sir.

Q65. And do those dates represent or designate the date when the drawings were made? A. That shows the date the drawing was made; yes, sir.

Q66. Will you please state in a general way what is shown by each of these sheets?

Mr. Lyman: Let us see those sheets.

Mr. Paul: Come right around here.

Mr. Lyman: All right.

(Question read by stenographer.) A. Well, this drawing is maked 4-68 and is a vertical elevation of the machine that was

built for the Raymondville Paper Company, and the sheet is dated June 13, 1904, and that shows that the arrangement was such that the breast roll could be raised from level to three inches above level.

By Mr. Paul:

Q67. What is shown by the small sheet? A. The small sheet shows a detail of the table bar bracket, and that shows how that the table bars and the breast roll could be adjusterd in order to get the pitch from level to three inches above level.

Q68. Is this a detail of the same structure that is shown in the last drawing? A. Yes, sir. That bracket is shown here (indicating).

Mr. Paul: I will say counsel for the defendant requests that the two drawings produced by the witness be marked Defendant's Exhibits T and T-1.

Drawings marked Exhibits T U and T-1 U.

Q69. Now, will you just explain in a general way, Mr. Kinney, how the elevation from level to three inches above level would be obtained by this drawing or by this structure? A. The breast roll bracket—

Mr. Lyman: Put some letters on to illustrate it.

A. Shall we start with A?

By Mr. Paul:

Q70. Anything you wish. A. The breast roll bracket A is bolted to the shape piece B and when the bolts C are loosened then by adjusting screw D the breast roll bearing A could be elevated to any height to three inches; then this table bar bracket E is slotted and had a bolt through it which was F, that would have to be loosened and it could be adjusted by a screw G.

Q71. How many of these table brackets are there contained in the drawing? A. There is eleven on the side on this particular machine.

Q72. With that construction how high could the breast roll be elevated? A. Three inches above level.

Q73. And that carried the making wire with it at that end? A. That carried the making wire with it, yes, sir.

Q74. Is that indicated in any way on the drawing? A. This shows the making wire (indicating). That is the return wire and that dotted line shows the top of the wire.

Q75. That is, the dotted line shows the original position of the wire or elevated position? A. The dotted line shows the elevated position. It is a full line from there to there. You can also see a little of it because that line runs to the bottom of the bar.

Q76. Please indicate by letter the dotted line showing the elevated position of the wire and the full line showing the original position? A. Well, the line H would show, which is a full line, would show the original position of the wire. Then the dotted line J would represent the wire in its elevated position.

Q77. Is that dotted line shown further along on the drawing down towards the suction boxes? A. Yes, it extends from the top of the breast roll to the first suction box.

Q78. Will you put the letter J prime on the dotted line representing the wire in its elevated position at some point near the first suction box? (Witness does as requested.)

Q79. What was the length of the making wire between the breast roll and the first suction box, about what was the length? A. I can tell you very close. Approximately 18 feet 6 inches.

Q80. Then with the breast roll adjusted by the means described into the position so as to bring the wire in the position shown by the dotted line you would have three inches elevation with the wire at the breast roll above the suction boxes? A. Yes, sir.

Q81. And it would pitch that amount from the breast roll to the first suction box? A. Yes, sir.

Q82. The wire was level from the first suction box to the guide roll? A. It was.

Q83. The E was on the bracket roll? A. Yes, E was on the bracket.

Q84. Put that corresponding letter on this small drawing. (Witness does as requested.)

Q85. Were those Palmer Falls machines the first that you had seen running at 500 or more? A. To the best of my knowledge, yes, sir.

Q86. What was your purpose in designing this machine shown in the drawings Exhibits T and T1 with the arrangement that you have described for adjusting the breast roll?

Mr. Lyman: The question is objected to as not relating to any matter referred to in the answer, and it is stipulated that this objection may be regarded as taken to all further questions along this line without repetition.

A. Well, it was on account of the increased speed desired and better formation.

By Mr. Paul:

Q87. And in what way did this construction assist in the matter of speed? A. Well, to go back to the principle of the velocity of water, the higher you raise the column of water why the greater is the velocity of the water coming from the vessel

or anything of that sort.

Q88. How did that work out on this construction? A. Well, it all helped. The first three inches did not, the three inches did not give the water the same velocity as the wire, but it was moved in the right direction.

Q89. Was there anything else that contributed to this result in the operation of this machine, anything else affecting the velocity of the water? A. I do not just understand what you mean by that.

Q90. What velocity or what arrangement was made for bringing the water onto the wire? A. Well, that would come on through the usual pond and the slices.

Q91. And what amount of head was designed to be employed with this machine? A. Well, the slices on this machine were eight inches deep and they had no slots in them, consequently a head of approximately eight inches could be carried in addition to the height of three inches that the wire was pitched up.

Q92. What was the purpose of having this amount of head and this amount of pitch? A. Well, the head and the pitch combined helped to get the velocity, the spouting velocity of the water; that is, the velocity due to the head would be more scientific.

Q93. And what was the object in getting this amount or this velocity of the water in the operation of this machine? A. If the wire ran faster or slower than the water you got a ripple and that ripple affects the formation of the sheet.

Q94. Did this obviate that objection? A. Well, it helped. It brought the velocity of the water and the speed of the wire nearer together.

Q95. What would be the effect in the operation of the machine by having the wire run faster than the water or stock? A. Well, it would be just that formation of a ripple.

Q96. How did it act to do that? A. If the wire ran faster than the water the water naturally hung back and would form along the side of the deckle straps a ripple that would run out towards the center of the wire.

Q97. What would be the result if the water ran faster than the wire? A. Well, you would also get a ripple, but in the opposite direction.

Q98. Now, were you familiar with those facts at the time these drawings were made in 1902? A. Yes, sir.

Q99. And do I understand that it was the purpose in making this design to overcome that objection? A. Yes, sir.

Q100. Did this machine have any capacity or adjustment

below the level, bringing the wire below the level? A. No, not below level; go to level.

Q101. But it could not be carried below the level so a wire would run up hill? A. Not without making some alterations.

Q102. How long have you been familiar with the proposition that you state that the speed of the stock or water and the speed of the wire should be the same, or substantially the same in machines of this kind? A. I first learned of it along about 1896 or 1897.

Q103. You have been familiar with it ever since? A. Yes, sir.

Q104. What amount of variation between the speed of the wire and the speed of the stock can be allowed and still get a good formation of the sheet, approximately? A. I would not like to answer that.

Q105. Can you give some approximate idea what amount of variation you can have and still have a satisfactory sheet? A. Why, the relation can be from fifty to one hundred feet or more difference.

Q106. Either way- A. Either way.

Q107. That is, the wire can be that much faster than the stock and the stock that much faster than the wire? A. Yes, sir; and still get approximate results.

Q108. Now, how many machines were built according to the design shown in the drawings Exhibit T and T Prime on or about the date of the drawings? A. There was four built during 1904.

Q109. Where were those machines installed? A. The first one went to Raymondville, N. Y., the second one went to L. L. Frost Paper Company at Norwood, N. Y., the third went to the Columbia River Paper Company at Camas, Washington. Now, there was another one right along there, I cannot think where it was, but I know there was four that year.

Q110. You know there was another machine? A. I know there was another machine built that year. It is possible it was the other Raymondville, but I cannot state positively.

Q111. Did your company continue to build machines according to this design after 1904? A. Yes, sir; until about 1906 or '7.

Q112. Now, did you see any of these machines in operation after they were installed? A. Many of them.

Q113. Where did you see some of those machines in operation? A. Well, there was that Raymondville machine, the L. L. Frost, the Columbia River. There are two more at Oregon City, built at a little later date, and still another one at

Camas, Washington, that I recall now.

Q114. How many of these did you see in operation. A. Well, I have seen seven or eight.

Q115. Did you ever time them or count the speed of the machines? A. Yes, several times.

Q116. At what speed were those machines ordinarily run? A. Well, they would run from 550 to approximately 600.

Q117. And did you personally determine that they were running at that speed? A. Some of them. I could not give you the exact speeds or the dates when I did this but I have done it several times.

Q118. You know that they did run at that speed? A. Yes, sir.

Q119. Soon after they were installed? A. Those two first machines soon after they were installed.

Mr. Lyman: Which first two?

A. That would be Raymondville and L. L. Frost. But The Columbia River machine and the two at Camas and the two at Oregon City I did not see until four years ago this summer. That was my first trip to the Pacific Coast.

By Mr. Paul:

Q120. But the first two you mentioned you saw running at the speed you mentioned soon after they were installed? A. Yes, sir.

Q121. That would be in the year 1904? A. No. You see they were started to be built in '4. They probably did not get running until 1905, or else very late in 1904.

Q122. What was the highest rate at which you saw any one of those machines running prior to the end of 1905? A. I could not say positively. That is pinning me down too close.

Q123. What is the highest that you recall? A. Well, something over 500 feet.

Q124. Did you ever see them run as high as 550 feet? A. Yes, sir.

Q125. And without any change from the construction shown in the drawings? A. I cannot answer that. I don't know.

Q126. And do you know whether any of those machines were blocked up so as to give them any additional pitch prior to the end of 1905? A. I do not think so. I don't know, but I do not think so.

Q127. Did your company issue any catalogue in the year 1905? A. Yes, sir.

Q128. Is this a copy of the catalogue issued for that year? A. Yes, sir.

Q129. About what time in 1905 was this catalogue issued?

A. I could not say.

Q130. But it was some time during that year? A. During that year.

Q131. It is printed on it "Catalogue 1905"? A. Yes, sir.

Q132. That date is correct, is it? A. That is correct.

Mr. Paul: I will ask that this catalogue be marked for identification Defendants Exhibit T-2.

Catalogue marked Exhibit T-2 U.

Mr. Lyman: I reserve my objection until the exhibit is offered in evidence. I object to the admission in evidence of this catalogue on the ground that it is irrelevant and immaterial, and is not evidence of any of the statements therein made.

By Mr. Paul:

Q133. Does this catalogue illustrate a number of machines manufactured by your company? A. Yes, sir.

Q134. As they were manufactured prior to the time of the issuance of the catalogue? A. Yes, sir.

Q135. It contains a description of the machines to a certain extent,—are these descriptions correct of these machines as they were at that time? A. Yes, sir.

Q136. Beginning on page twenty-five there is a certain statement relating to the speed of the machines under the heading "The Bagley-Sewall Company High Speed Machines" and the speeds of certain machines are specified,—those statements as to speeds are correct? A. Yes, sir.

Q137. Were you personally familiar with that fact? A. I cannot say I counted the speeds for that description but those figures were given us by letters from the men who owned the machines.

Mr. Lyman: The answer is objected to as hearsay.

By Mr. Paul:

Q138. And did you count the speed of any of the machines so as to know that any of them did make the speeds here stated? A. Now, you mean any machines spoken of in those descriptions?

Q139. Yes. A. I have at times.

Q140. And as early as the date of the catalogue? A. I cannot answer that.

Q141. How early can you speak of personal knowledge that the machines obtained the speeds here given? A. Why, it was some time during, 1906, 7 or 8.

Q142. And were the machines in the same condition then as when they were first installed? A. I don't know.

Q143. In what way were the statements made to your company as to the speed of these machines? A. They were made in

the form of letters from the owners of the machines.

Q144. Have you got any of those original letters here? A. Yes, sir.

Q145. What letters have you to produce? A. I have one from the Remington-Martin Company under the date of October 1st, 1904, and signed by their superintendent, A. J. Lewthwaite, that gives the speed of a 100 inch machine at 585 feet per minute.

Mr. Lyman: The answer is objected to as hearsay.

A. And there is another letter under the date of October 11, 1904, from Mr. George Cahoon, Jr., vice-president of the Laurentide Paper Company, Ltd., at Grand Mere, Quebec. Mr. Cahoon's speed at that time was 553 feet.

Mr. Lyman: You mean that is what his letter says, do you?

A. Yes, that is what the letter says.

Mr. Lyman: The answer is objected to as hearsay.

A. And he furthermore states if he had 32 to 34 dryers he could just as well have run at 600 feet.

Mr. Lyman: The answer is objected to as hearsay.

A. Under date of January 28, 1905, another letter from Mr. Cahoon in which he states that a machine that had just been installed was started at 503 feet per minute and after running at that speed for two weeks it was put up to 553 feet, which speed has been maintained ever since.

Mr. Lyman: The answer is objected to as hearsay.

Mr. Paul: The letters produced I ask to have marked for identification Defendant's Exhibits T-3, T-4 and T-5.

Mr. Lyman: The letters are objected to as incompetent, immaterial and hearsay.

Letters marked Exhibits T-3-U, T-4-U and T-5-U.

By Mr. Paul:

Q146. Were those letters received on or about the time or dates that they bear? A. Yes, sir.

Q147. From your knowledge of the construction of these machines and their operation as you personally saw them have you any reason to doubt their capacity to attain the speed stated in these letters? A. No, I do not doubt it.

Q148. Were those speeds generally represented by your company as having been attained by these machines? A. Yes, sir.

Q149. And in 1905, at the date of this catalogue? A. Yes, sir.

Q150. Now, I wish you would state, Mr. Kinney, the highest speed which you recollect ever having seen any one of these machines running at any time prior to the end of the year 1905?

A. I could not do that, Mr. Paul. I cannot remember that that far back to get down as exact as that.

Q151. Did your company advertise these speeds in any other way than this catalogue? A. That was the second catalogue that we ever published and whether there was anything said in the first catalogue I cannot tell you.

Q152. I mean in any way other than catalogues, any other advertising? A. Well, I recall a newspaper article that our president wrote at that time, but that is the only thing I can remember.

Q153. Who was the president of your company? A. At that time the gentleman was not president, he was secretary, Mr. Stuart D. Lansing. He has since become president. At the time he wrote the article he was secretary of the company.

Q154. Were you familiar with the article at the time that it was published? A. Yes, sir

Q155. In what paper was it published, do you recall? A. Well, it appeared in the Wood Pulp News and I think in some other publications.

Q156. And were the speeds claimed for the machines stated in that article at that time? A. Yes, sir.

Q157. I call your attention to a photostatic reproduction of the page ninety in the Paper Mill dated February 10, 1906, and ask you to state whether this is the article to which you referred? A. Yes, sir, that is the article.

Mr. Paul: Counsel for the defendant requests that the article referred to and the other portions of the discussion appearing on page ninety-two of the same issue of the same publication be marked for identification Defendant's Exhibit T-6.

Article referred to marked Exhibit T-6-U.

Mr. Lyman: The exhibit is objected to as immaterial, incompetent and hearsay.

By Mr. Paul:

Q158. Do you recall an advertisement in that same issue of the same paper of the Bagley & Sewall Company? A. Yes, sir.

Q159. The full title of this paper is "Wood Pulp News & The Paper Mill"? A. Yes, sir

Q160. I ask you to look at the paper that I hand you and state whether that is a photostatic reproduction of the advertisement? A. Yes, sir, that is correct.

Q161. Was the speed of any one of these machines stated in this advertisement? A. Yes, sir, it is stated in the advertisement.

Q162. What is the speed there given?

Mr. Lyman: I object to the question as hearsay.

A. It is given in this advertisement as 618 feet per minute.

Mr. Paul: Defendant's counsel asks to have the advertisement marked for identification Defendant's Exhibit T-7.

Mr. Lyman: The exhibit is objected to as immaterial, incompetent and hearsay.

Advertisement marked T-7-U.

By Mr. Paul:

Q163. From your knowledge of the construction of these machines and your familiarity with the operation of paper making machines what would you say as to the capacity or capability of these machines of running and making satisfactory paper at the speeds stated in the catalogue and in these publications? A. They would do it all right.

Q164. I think you stated that the machine shown in the drawing Exhibit T was designed to have an eight inch head? A. Eight inch slice.

Q165. Do you know whether all of these machines that you have been referring to of this design were provided with that same amount of slice? A. I think they all were; yes, sir.

Q166. And this providing the machines with this amount of head by the slice and the amount of pitch shown by the drawings would be equivalent to what amount of actual head on the machines? A. Well, approximately ten inches, I should think.

Q167. And what effect on the question of speed would be produced by the three inch elevation of the wire at the breast roll? A. Well, the three inch pitch plus the head behind the slices would give you about ten inches head which would give you the velocity of the water flowing onto the wire.

Q168. Well, the pitch would not change the velocity of the water as it came onto the wire, would it? A. Well, if you have just the pitch without any head due to the slices you would only get a velocity due to three inches.

Q169. Yes, I understand that, but the pitch would not affect the velocity as it came onto the wire, that is, at the beginning of the wire, would it? A. I do not just understand you, Mr. Paul.

Q170. Where would the effect of the pitch begin on the stock? It would not begin until after the water got onto the wire, would it? A. The effect of the three inch pitch would begin just as soon as the water ran under the first slice.

Q171. Where in this machine were the slices located? A. The slice was approximately 24½ inches ahead of the center of the breast roll.

Q172. Then, as I understand it,—and the pitch began at

the breast roll? A. At the center of the breast roll; yes, sir.

Q173. So that the water as it passed onto the breast roll was subject to this pitch given to it by the wire? A. Yes, sir.

Q174. In the operation of machines of this kind what difference, if any, is there in the result obtained by the head given to the stock or water and the action of the pitch of the wire? A. I do not just get you, Mr. Paul, the way that question is put.

Q175. (Question read by stenographer.) Is that question clear? A. Well, I guess so. You mean by that that the,—well, the pitch or the head gives velocity.

Q176. Does it make any difference in the action whether this velocity is obtained by the head or by the pitch of the wire? A. Now I get you. It don't make any difference.

Q177. Assume that you have one machine operating with a three inch pitch and an eight inch head and another one with a six inch pitch and a five inch head, what, if any, difference will there be in the resulting operations of the machine? A. There won't be any.

Q178. Now, upon what do you base that statement, Mr. Kinney? A. Because the velocity is due to the head, and no matter how you get the head, that is vertical head.

Q179. Will it make any difference in the action of the machine, in the forming of the sheet, whether you use for instance an eight inch head and three inch pitch or a five inch head and a six inch pitch? A. There would be no difference.

Q180. Is there any authoritative publication giving the velocity or the spouting velocity of water under different heads? A. Yes, sir.

Q181. What publication is that? A. You find it in Trautwine's Pocket Book of Civil Engineering.

Q182. Have you a copy of that? A. Yes, sir.

Q183. Have you it here? A. Yes, sir.

Q184. Will you please produce it and refer to the table which you have in mind? A. There is the table on page 258. That gives it in second speed; that is, speed per second.

Q185. And what variation in head is given in this table? A. This table gives it from 5/1000 of a foot up to a thousand feet; that is vertical height.

Q186. Does that apply to the action of the stock or water passing onto the wire in a Fourdrinier machine? A. It applies except for the slight frictional loss that might come upon the wire.

Q187. This is theoretical? A. This is theoretical.

Q188. That friction? A. That friction.

Q189. But except for that it applies? A. Yes, sir.

Q190. Have you figured that over and made a corresponding table giving the velocity per minute instead of seconds? A. Yes, sir; for each inch.

Q191. For each inch of head? A. For each inch of head.

Q192. Have you that here? A. That is from one inch to fifty-four inches.

Q193. This computation was made by yourself? A. Yes, sir.

Q194. And based upon this Trautwine table on page 258? A. Yes, sir; of the edition of 1900.

Q195. Is this Trautwine's engineer's pocket book a standard engineering publication? A. Yes, sir; has been for many years.

Q196. Are the computations there generally accepted by engineers as correct? A. Yes, sir.

Mr. Paul: I ask to have the table produced by the witness as prepared by himself marked for identification Defendant's Exhibit T-8.

Table marked T-8-U.

Q197. Now, referring to the table that you have produced, Exhibit T-8, please state the velocity in feet per minute of water passing onto the wire in the Fourdrinier machine such as illustrated in the drawing, Exhibit T, with an eight inch slice? A. Well, that gives eight inch slice and three inch pitch—

Mr. Lyman: You mean with eight inch head?

By Mr. Paul:

Q198. Eight inch head? A. Eight inch head and three inch pitch that would be a total of eleven inches, it should give a theoretical speed of 459 feet per minute.

Q199. Now, with that 459 feet per minute, with what speed would you be able to run that machine and produce a satisfactory sheet of paper? A. We could run as fast as 550 to 560 feet or thereabouts.

Q200. It is not necessary, then, that the speed of the stock and the speed of the wire should be exactly the same in order to produce a satisfactory sheet? A. Not absolutely the same.

Q201. You have stated the amount of variation that there can be and produce that result? A. Yes, sir.

Q202. That you think would be about how much? A. I think that I stated it was approximately 150 feet.

Q203. Upon what do you base that statement? A. From the actual practice that I have seen in the mills.

Q204. And your own experience? A. Yes, sir.

Q205. Have any machines manufactured by your company

been installed with any higher pitch of the wire than what is shown in the drawing, Exhibit T? A. Not by that same method.

Q206. Have they by any method? A. Yes, sir.

Q207. What is the height of the pitch that has been employed in any of those machines so far as you know? A. I think 14 inches.

Q208. And how has that been obtained? A. That was done by blocking up the entire Fourdrinier part from the suction box frames on iron wedges.

By Mr. Lyman: You mean including the suction box frame?

A. Yes. You tilt the suction box frame beginning right at the guide roll.

By Mr. Paul:

Q209. So that the entire Fourdrinier frame is tilted from the breast roll to the guide roll? A. Yes, sir.

Q210. What head has been provided with those machines? A. Well, those that have been pitched up fourteen inches usually had a ten inch slice, so that would be a total of 24 inches.

Q211. Are you building any machines at the present time in which you have made any other change in the head? A. Yes, sir.

Q212. And the pitch? A. Yes, sir.

Q213. What are you providing in that machine? A. We are having one with a total pitch of 36 inches.

Q214. How is that obtained? A. That is taken care of by an actual 8 inch pitch and a 28 inch slice.

Q215. 8 inch pitch of the wire? A. 8 inch pitch of the wire.

Q216. And 28 inch— A. Change that. That is 9 inch pitch and 27 inch slice; that is 36 inches.

Q217. What total velocity do you figure that will give to the water or stock? A. That gives a theoretical velocity of 834 feet a minute.

Q218. What speed is that machine designed to run? A. Designed to run from 500 feet to a thousand feet a minute.

Q219. Will it in your judgment make paper at a thousand feet per minute? A. Yes, sir.

Q220. Satisfactorily? A. Yes, sir.

Q221. Is it customary in all Fourdrinier machines to provide a side shake to the Fourdrinier wire at the breast roll end? A. Yes, sir.

Q222. You think that is a necessary feature of such machines? A. It was supposed to be originally but it is not necessary now. It is furnished, but they do not always use it.

By Mr. Lyman: That is the shake?

A. The shake; yes, sir.

By Mr. Paul:

Q223. Under what circumstances is it not used? A. Well, some superintendents think it is not necessary and they fasten the shake in its middle position and let it run without shake.

Q224. Don't shake it at all? A. Don't shake it at all.

Q225. Have you seen machines operated in that way? A. Yes, sir.

Q226. At what speed were they running? A. I saw one that was said to be running about 545 feet.

Q227. You did not count it? A. I did not count it.

Q228. Did you examine the paper that was made? A. Yes, sir.

Q229. Was it making a satisfactory sheet? A. It looked like a good, ordinary news paper.

Q230. I notice that in the drawing Exhibit T the pitch of the wire extends only to the first suction box? A. Yes, sir.

Q231. How much pitch can be given to the wire in the length shown in this drawing without raising it from the suction boxes, about how much? A. There is a condition there that you cannot account for. There is a natural sag of the wire that will hold the wire down to the box until you get to a certain pitch. You have speed enough to hold it off the box.

Q232. To how much pitch could you ordinarily go with a machine of that kind without taking it off the boxes, could you exceed what is shown in this drawing? A. Yes, I think we would have gone to six inches easily enough and would still stick to that first box.

Q233. Have you made any change in the location or arrangement of the slices since the machine shown in the drawing Exhibit T was designed? A. Yes, sir.

Q234. What is that change? A. Well, we made it a point to keep the slices nearer the breast roll, and some cases the slices come directly upon the centre of the breast roll.

Q235. What is the purpose of that? A. The distance between the centre of the breast roll and the first slice is known as the pond, and the further that pond extends on the wire the greater weight will come upon the wire and the first three or four table rolls. The nearer that slice can be kept to the centre of the breast roll you decrease the weight of the pond on the wire and table rolls and thus help make the wire wear longer, which construction permits the employment of higher slices by putting it on the centre of the breast roll.

Q236. For the reason that you have stated? A. Yes, sir.

Q237. It takes the weight off the wire? A. It takes the weight off the wire.

CROSS EXAMINATION.

By Mr. Lyman:

XQ238. That new machine that you are constructing which is to have 27 inch slice, why do you pitch the wire at all? A. That is so as to keep the height of the pond constant above the wire, to get your slowest speed by letting the pitch down. You see you could have it level and still 27 inch pond or head.

XQ239. Why don't you get all the speed you want by means of your pond, making the pond deeper? A. Well, we want to run various speeds and at the lower speeds we must let the water down. There are cases where they may want to run at level or below level, and they may have the pitch down and keep the pond at a certain height.

XQ240. How is the pitch given to the wire in the machine? A. By a worm, a worm wheel and screws.

XQ241. It is adjustable? A. It is adjustable; yes, sir.

XQ242. All the way from 8 inches above level to level?

Mr. Paul: I think he said 9 inches.

By Mr. Lyman:

XQ243. 9 inches above level to level? A. I think that is it. It is approximately that, anyhow.

XQ244. What is the idea in that machine, to always run it in such a way that the speed of the stock is equal to the speed of the wire? A. That is the intention; yes, sir.

XQ245. You get that speed equality by the action of the pitch coupled on with whatever initial speed there is given to the stock by the head behind the slices? A. Yes, sir.

XQ246. Is that machine actually built yet? A. It is under construction now.

XQ247. For whom is it being built? A. I would not like to answer that. I will show you the machine if you will come out to the shop.

XQ248. Has there any such machine been built up to the present time and installed? A. No, sir, not that I know of.

XQ249. What is the height, the deepest pond back of the slices that has been used up to the present time so far as you know? A. 18 inches, in our own practice.

XQ250. Where have you used that? A. I cannot tell you offhand, but we built three or four with those 18 inch slices.

XQ251. When you use 18 inch slices do you also use a pitch? A. Sometimes.

XQ252. How much of a pitch? A. Usually about 6 inches.

XQ253. Where are those machines in use? A. I cannot tell you off-hand. If you really want to know I can give it to you.

XQ254. Yes, I would like to know. In those machines with

the high head why do you want to keep the head constant? Perhaps I should not have said to keep the head constant. A. The idea is that the head and the pitch will give them the speed that they want. Sometimes they get it by a pitch and sometimes by head.

XQ255. Then I ask you why you do not get it all by head, why do you use some pitch always? A. I cannot answer that. It is a paper maker's point. That is one of the things that they insist upon is being able to get both.

XQ256. You don't know why they insist upon it? A. No. There is one thing, if you will let me make an explanation, the pitch is usually constant, you see, and we put on this slice and they vary the head behind the slice. On this particular machine we are building now with 36 inch head it is not news paper, it is a very long strong fibre, and they find it is better to vary the pitch and also vary the head to get the formation.

XQ257. You say the pitch has exactly the same effect as head, don't you? A. Yes, sir.

XQ258. Why do they insist upon having partly pitch and partly head to get this speed equality? A. That is the paper maker's part of it.

XQ259. You don't know? A. I don't know.

XQ260. You are not a paper maker? A. Not a bit of it; no, sir.

XQ261. Didn't you say that you had reached the view that pitch and head had exactly the same result? A. Yes, sir.

XQ262. By your own personal experience? A. Not experience; observation. I might have said experience, too, almost. Observation. I have seen it in the mills, that is all.

XQ263. Just what have you observed that gave you that view? A. You go in one mill and you will see them using pitch and a very low slice and they are running at a certain speed and making a good sheet of news paper; and you go right in the next mill and you will find the wire is flat, level, and the head is all behind the slice and they are running at just the same speed and same stock and making practically the same sheet of paper.

XQ264. Now, tell us two mills where those circumstances exist respectively? A. You are pinning me down too close, now.

XQ265. I want to know facts? A. Mr. Lyman, they twist those things around. You go in a mill today and you will find a wire running level and you go next week and they pitch that wire 10 inches on the same machine by putting in wedges. They shift those things around back and forth. We might start

today to this mill that we thought was running with 10 inch wedges under and by the time we got there the wedge that is 14 inches is down to 4 inches. They do not have any fixed standard about those things.

XQ266. You must have something definitely in mind as the basis of that statement of yours. I want to know just where you observed these two conditions? A. Well, just a minute. If I will show you drawings will that be satisfactory with the high slides in one case and the wire level, and then wedges under another one and a little slice?

(No Q267.)

XQ268. I should not think that would prove anything. A. That would prove it just as good as the statement I have given you.

XQ269. Your statement is based entirely on the fact that you have sometimes built machines flat with a high head and other times you have built machines with high pitch and given them a low head? A. And seen them running afterwards.

XQ270. Now, just give me two illustrations of that? A. I think I can show you and prove it by the drawings of the DeGrasse Paper Company. We built them two 160 machines and to the best of my knowledge one had wedges 6 inches high and the high slice and the other was flat with a high slice.

XQ271. Were they running at the same speed, do you think? A. Yes, they were.

XQ272. Are they now? A. I have not seen them in a year, or more; a year and a half. They were at the last time I saw them. The machines were duplicates.

XQ273. What was the head that run behind the slice in the first machine? A. They had on a 15 inch slice; how deep the water was behind the slice I cannot tell you. I don't know. The slice was high enough so it would carry 15 inches.

XQ274. How much of a pitch did the wire have with that machine? A. One of them had a 6 inch pitch and 10 inch slice and the other was flat wire and 15 inch slice.

XQ275. You understand that that Bagley & Sewall machine that the DeGrasse Paper Company is running without any pitch? A. I think one of them was when we built it.

XQ276. It did not have any capacity for a pitch on the wire? A. As I remember it we built it flat and a deep slice, one of them.

XQ277. Which one was that, the No. 3 or No. 4? A. Now, I cannot tell you. Wait until I call up the office and I will tell you. They are looking it up. It will take ten or fifteen minutes to get it.

XQ278. I will go on another subject. What is the purpose of the portion of the screw which you marked D which is above the boss through which it passes? A. Well, it is for no particular purpose except to get the proper length of the screw.

XQ279. Does not that provide an adjustment by which you could lower that wire an inch below the level? A. I do not think so. That is more of a mechanical construction because you cannot get a thread right tight to the head. There is something about the length of that pattern why we would make the screw longer than necessary rather than alter the pattern.

XQ280. Is there any other feature of that machine that would prevent lowering it below the level by the amount of the —lowering the breast roll below the level by the amount of the screw portion which is above the lug? A. Yes, sir. That line right there. This other drawing will show it better.

Mr. Paul: Put a reference letter on it.

A. Line K on the under side of the table bar represents a shelf on the casting that would lay upon the lug L of the table bar bracket E, and this would prevent the table bar from going below level.

By Mr. Lyman:

XQ281. Was the machine so constructed in each of the four machines that were built in accordance with this drawing? A. To the best of my knowledge; yes, sir.

XQ282. You feel sure of that? A. Yes, sir.

XQ283. Was that so at Willamette? A. I am not positive, but I think so.

XQ284. Willamette was one of the four machines you had reference to constructing according to this drawing, was it not? A. No, not Willamette. That came later, I think. The two Willamette machines and Columbia River was later. One of these was Columbia River, a small 124 inch machine.

XQ285. Will you find out where the fourth machine was? A. I can.

(At this point an adjournment was taken to the office of the Bagley & Sewall Company.)

CLARENCE E. KINNEY,

re-called.

Cross examination continued.

By Mr. Lyman:

XQ286. You have now obtained further information about the DeGrasse machines, have you? A. Yes, sir.

XQ287. And what do you find as to them? A. I find that the first 160 inch machine which we built for the DeGrasse

Paper Company on the drawing dated December 6, 1911, shows that the wire part was level, that the machine was fitted with a slice 18 inches high. On the second 160 machine built for DeGrasse on the drawing dated September 17, 1912, the breast roll had a pitch of four inches high and a slice of 18 inches.

XQ288. You do not know whether those were blocked up since or not? A. I do not.

XQ289. Now, you have spoken of four machines that were built about 1904 and installed some time in 1905 in accordance with this blue print which is marked Exhibit T? A. Yes, sir.

XQ290. Did you ever see any of those machines after they were installed? A. Yes, sir.

XQ291. Which ones did you see after they were installed? A. I have seen Raymondville and L. L. Frost. That is now the Norwood Paper Company. And the 124 inch machine of the Columbia River Paper Company.

XQ292. And when did you see the Raymondville and the L. L. Frost machines? A. I could not give you the exact date but soon after they were started.

XQ293. Within a year after the time they were started? A. Probably.

XQ294. Now, at that time was there blocking under either of those machines? A. I do not remember.

XQ295. And do you remember whether the wire was running level or with this two or three inches downward pitch? A. I do not remember that.

XQ296. Then you would not be able to say whether any one of those four machines as it was installed used that 3 inch downward pitch that was made possible by the adjustment? A. I could not say positively.

XQ297. Now, you have said, I believe, that you had no information as to the speed which was obtained by any one of these four machines prior to 1906? A. I think I said that; yes.

XQ298. Do you know whether blocking was ever put under that Raymondville machine? A. I don't know.

XQ299. You never saw it with blocking under it or you do not remember? A. Not that I could remember.

XQ300. When did you see it last? A. O, let me see. I have not been to Raymondville in six or seven years.

XQ301. How often do you visit the paper mills? A. It makes a lot of difference which mill. Some mills I visit three or four times a year and other mills I do not get to once in three or four years.

XQ302. When you go to see the mills what do you go for? A. It is generally because they send to me, because they want

to make some changes in the machines.

XQ303. You do not regard yourself as a practical paper maker? A. No, sir; never.

XQ304. Do you know at what speed the St. Regis machines are running at the present time? A. Only by hearsay.

XQ305. Have you ever seen them in operation? A. O, yes. That is, I was in the St. Regis a year next month, the last time I was in the St. Regis mill, in July, 1916.

XQ306. Approximately what speed were they making at that time? A. Will you let me look in a note-book?

XQ307. Yes. A. Wednesday, August 16, 1916. "Mill 1, St. Regis Paper Company, Deferiet, 160 inch, running 575 feet per minute, making about 50 tons per day." That is the last entry I have for the St. Regis Paper Company. That was August instead of July.

XQ308. Would you have any knowledge as to the speed at which any one of these four machines that you have mentioned as having made in accordance with this drawing Exhibit T were operated at any time during the year 1906? A. I might be able to look it up in some of my note books but I cannot tell you now off-hand.

XQ309. You do not remember at the present time? A. I do not remember now at the present time.

XQ310. Now, was there anything especially novel in your view about the mechanism for adjusting the breast roll in those four machines? A. Yes, sir.

XQ311. Did you apply for a patent on it? A. No.

XQ312. Was that made under any patent or application for a patent? A. No.

XQ313. What was there novel about it? A. The idea of getting the breast roll and the table roll above level.

XQ314. That was a new idea at the time in 1904, was it? A. Yes, sir.

XQ315. You never heard of it prior to that time? A. We had heard talk of adjustable Fourdriniers but that is the first we had built. It may not have any bearing on this case. I can show you drawings of things that we developed here as early as 1902 on adjustable Fourdriniers, but we never built them. They were simply schemes that we were working up.

XQ316. Were these four machines that you made in accordance with this blue print with the adjustable Fourdrinier used on news? A. Yes, sir.

XQ317. Did your company regard that adjustable Fourdrinier as a success on news machines? A. We did; yes, sir.

XQ318. Were your views the same as Mr. Lansing's on that

point? A. You mean as far as the satisfactory making of the paper?

XQ319. Yes. A. Yes, sir.

XQ320. What was the purpose for which you made some machines to run up-hill? A. You mean by that dropping the breast roll?

XQ321. Dropping the breast roll below the level. A. Those machines are used on specialty machines and different kinds of stock where you are making a better grade of paper like bag paper, craft paper.

XQ322. What is the theory, what is the reason that they are used? A. If the stock is what they call slow your wire has to have a certain inclination; if the stock is free, it must have a different inclination.

XQ323. Why? A. Because the water in one case comes out much quicker than in the other case.

XQ324. If you have a slow stock what sort of inclination do you want? A. You want the breast roll down; want it low. With free stock you want the breast roll up.

XQ325. Why do you want the breast roll up with free stock? A. Because it carries the water down so much farther towards the suction boxes.

XQ326. And the news stock was free stock? A. Yes, sir.

XQ327. And that was the reason you built these machines with the breast roll adjustable, that is why you built some machines with the breast roll below level and other machines with the breast roll adjustable above the level? A. Yes, sir.

XQ328. To take account of the different qualities of stock as far as the drainage is concerned? A. Yes, sir.

XQ329. It was a drainage adjustment? A. Yes, sir, partly, and partly for formation.

XQ330. Quick stock is stock that parts with its water easily and slow stock is stock that is retentive of water? A. So I understand it, yes, sir.

XQ331. In both cases it was a case of improving the formation, that is whether you were operating with slow stock with the breast roll below the level or quick stock with the breast roll above the level? A. Partly for formation and partly for speed. We soon learned in order to get the speed we wanted to elevate the breast roll.

XQ332. What was the fastest machine you had, prior to 1906, in operation? A. 618 feet.

XQ333. What machine was that? A. That was the 100 inch machine at the Remington-Martin mill at Norfolk.

XQ334. Now, you are talking simply on the basis of the

statements made in that catalogue? A. Yes, that is it; and our figures made up when those machines were built.

XQ335. You are talking about something of which you have no personal knowledge? A. Well, personal knowledge; it is like this. We are in contact with these mill people, you know, what they are doing. I never went and put my finger on it when it went 618.

XQ336. You never counted it? A. I never counted it when it was running 618 feet.

XQ337. That was the No. 1 machine at the Remington-Martin Company? A. I could not tell you. It was the 100 inch machine.

XQ338. The smaller of the two Remington-Martin machines? A. Yes, sir.

XQ339. Now this catalogue which you have produced mentions a number of machines which I take to have been notably fast machines? A. Yes, sir.

XQ340. In accordance with the claims of this catalogue, consisting of the Berlin mill machines? A. Yes, sir.

XQ341. The two Remington-Martin machines? A. Yes, sir.

XQ342. And the St. Regis machine? A. Yes, sir.

XQ343. And the Laurentide machine and possibly one or two others? A. Yes, sir.

XQ344. Which of those if any had an adjustable breast roll? A. You will have to let me look it up. I cannot tell you offhand with the exception of these first three.

XQ345. I want to know if any of those machines has an adjustable breast roll? A. I will look it up and let you know shortly.

XQ346. The catalogue refers also to a Raymondville machine. Is that the Raymondville machine that was built in accordance with this Exhibit T? A. No. You will have to wait and let me look it up. There were two Raymondville machines.

XQ347. Do you know the width of the Raymondville machine? A. I will have to get that for you. The first Raymondville machine was a 114 inch machine. That is not the one. That particular Raymondville machine was the 120 inch machine.

XQ348. That is, the Raymondville machine that was made in accordance with Exhibit T was 120 inches? A. 120 inches with the wire.

XQ349. The one that is referred to in the catalogue is the 112 inch machine. I suppose that means the 114 inch machine? A. Does it say that?

XQ350. Yes. A. Yes, sir. That would be the narrow one.

XQ351. Now, you have produced a sheet of paper giving a list of machines in which there has been high slice and also pitched wires? A. Yes, sir.

XQ352. Will you, in view of this information, answer the question I asked you, giving these particulars for such machines? A. That is the question you asked me down to the other office?

XQ353. Yes. A. You better ask the question over again.

XQ354. Please state what the height of the slice has been and what pitch has been given to machines in which you have the high slice and the high pitch? A. There was one machine where the wire was put level with an 18 inch slice.

XQ355. Where was that? Which machine was that? A. That was the first DeGrasse machine. The second DeGrasse machine had a pitch of four inches and a slice of 18 inches. A machine built for the Donnacona Paper Company had a pitch of 12 inches and a slice of 18 inches. A machine built for the Wausau Sulphate Paper Company that had an adjustable Fourdrinier so you could get as much as seven inches above level in addition to a 12 inch slice. We built one machine for the Donnacona Paper Company that was pitched up 18 inches and had a 10 inch slice. There were two machines built for the Fort Francis Pulp & Paper Company that had 12 inch pitch and 10 inch slice. There was a 186 inch machine built for the Crown-Columbia Pulp & Paper Company, 15 inch pitch and 10 inch slice. A machine built for the Oji Paper Manufacturing Company, 16 inch pitch, 18 inch slice. That covers that list.

XQ356. Within how long a period have these machines that you have now named been built? A. The first DeGrasse was started in 1911; that is, our work was started—you want the time when the machine was started?

XQ357. No, that is near enough. A. Our construction period on the first DeGrasse covered from October, 1911, to March, 1912. The second DeGrasse—

XQ358. I do not care for each individual, if you can say all of them have been built since the DeGrasse? A. That would be from 1911 to date.

XQ359. Prior to 1911 had you built any machine with as high a slice as 10 inches? A. I will have to look it up on this list for you. I can't tell you that offhand. I will get it for you. August 24, 1911, was our first 15 inch slice. April 17, 1912, first 10 inch slice. June 9, 1912, 18 inch slice.

XQ360. Does the fact that a machine has a slice 10 inches high or 15 inches high or 6 inches high mean necessarily that

the head carried behind the slice is 10 inches or 15 inches or 6 inches? A. It does not necessarily mean that, but they would not have a high slice if they were not going to use a deep pond.

XQ361. In 1906 what was the usual height of the slice? A. 8 inch slice.

XQ362. And had there been higher slices than that put in to your knowledge by 1906? A. No, sir, there had not. Well, that is, not to my knowledge. Two or three had put them in. I am speaking of our own product.

XQ363. That is not the question. A. All right.

XQ364. With a slice of 8 inches can you carry as much head as 8 inches? A. Yes, sir.

XQ365. Is not it going to slop over? A. For this reason, when your slice is 8 inches deep if your slice has been pulled up from the wire anywhere from three-quarters to an inch, according to the amount of flow you are letting through, why measuring from the wire up with 8 inch slice it would be approximately 9 inches or more to the top of the slices, because you must count the opening.

XQ366. With an 8 inch slice how much of a head can you possibly carry? A. Pretty close to 8 inches.

XQ367. Now, do I understand you to say that one inch of pitch is the exact equivalent of one inch of head behind the slices? A. That is my idea; yes, sir.

XQ368. Have you ever attempted to figure that out mathematically? A. Not any more than by a table of velocities.

XQ369. Your idea is that to give a breast roll an elevation of one inch from the guide roll on a Fourdrinier machine is giving it just as much velocity and no more and no less as if you added one inch to the head behind the slices? A. Yes, sir; that is it.

XQ370. Are you familiar with the principles of hydraulics? A. Yes, sir.

XQ371. What education have you had? A. A sort of technical education.

XQ372. Where? A. Not in any college.

XQ373. Where? A. Picked it up out of books.

XQ374. What education did you have? A. High school.

XQ375. You never worked in a paper mill? A. Never.

XQ376. You have given here in your direct examination all your experience since you left high school? A. O, no, not all. I have had other experience. I did not come from high school to this company.

XQ377. What did you do before you came to this company? A. I served an apprenticeship of three years as machinist and

I worked as a journeyman machinist four years and I worked as a draftsman for three years and then I came to this company.

XQ378. Do I understand you to say that putting the pitch on the wire by elevation of the breast roll above the level causes the stock to enter upon the wire at a higher rate of speed than it otherwise would? A. If you reach a rate of speed equivalent to the velocity due to the head.

XQ379. Does it enter upon the wire at a higher rate of speed than it otherwise would? A. You have got to qualify the question a little.

XQ380. Explain in what way I need to qualify it. I will try to make it as clear as I can. A. Let us discuss this a minute.

(Question read by stenographer.)

A. No, it does not.

XQ381. Please tell me what adjustment for the breast roll there was on the two Remington-Martin machines, the St. Regis machines, the Berlin Mills machines and the Laurentide machine referred to in this catalogue? A. The No. 1 Remington-Martin machine had 1¼ inch pitch above level. No. 2 Remington-Martin had a 1½ inch. St. Regis No. 1 machine had 1¼ inches, St. Regis No. 2 machine 1½ inches. The St. Regis No. 3, 1¼ inches. The St. Regis No 4, 1¼ inches. Berlin Mills four machines each 1¾ inches. Laurentide Paper Company 1¼ inches.

By Mr. Paul: Those all above level?

A. That is all so they could be adjusted level. They were all adjustable.

By Mr. Lyman:

XQ382. How did it happen that all of these Bagley machines that you referred to in the catalogue had adjustments not to exceed 1¾ inches while the other slower machines that were made in accordance with Exhibit T had a 3 inch adjustment? A. O, partly due to the fact that they found that they could get those higher speeds without the adjustment.

XQ383. You mean you found that the adjustment did not help towards getting higher speeds? A. We did not find; the paper makers.

XQ384. The paper makers found that? A. Yes, sir.

XQ385. And so they asked you to put in lower adjustments when they wanted to get higher speed? A. That was not the exact reason, but that is what they said they wanted; so much adjustment.

XQ386. There could not be any advantage in having so much adjustment as 3 inches for high speed? A. I won't say

that. It was not a case of advantage, it was a notion.

XQ387. Well, it was their notion that when they were going to have high speed they did not want any adjustment? A. It is not so.

XQ388. Tell me what it is that made them call for 1¼ inches adjustment when they wanted high speed? A. Because the superintendent of the mill said to us, make them so it would raise 1¼ inches.

XQ389. Did you tell him that he could get more speed if he had a 3 inch adjustment? A. No, sir.

XQ390. Well, it was your business, wasn't it, to advise paper makers the best construction you knew for speed? A. Now, Mr. Lyman, don't put this down,—you cannot tell paper makers anything.

Mr. Paul: That don't help us; we are not going to get through. Just say the things you want to have go on the record and don't say the others.

By Mr. Lyman:

XQ391. We are wasting quite a little time. A. You do not understand this paper making game or you would not ask those questions at all.

XQ392. Instruct me in the paper making game.

Mr. Paul: I want to make an objection to the statement in your question that the machines that are shown in this blue print Exhibit T were prior to the machines with the inch and a quarter adjustment. I think you misled the witness by making that statement.

Mr. Lyman: I will ask Mr. Paul to let my witness testify, if he pleases.

Mr. Paul: I am willing to let the witness testify, but if you make a misstatement I will call his attention to it.

Mr. Lyman: What did you say my misstatement was?

Mr. Paul: That the inch and a quarter followed the three inch.

Mr. Lyman: Do you say the Laurentide and Berlin machines were made before the machines shown on Exhibit T?

Mr. Paul: I say these machines were subsequent to the machines mentioned in the catalogue.

By Mr. Lyman:

XQ393. When were the Berlin Mills machines put in? A. They were started, the elevation was made in 1903. I will give you the exact dates that covered the building if you want them. They were started June 16, 1903, and finished August 1, 1904.

XQ394. All four of them? A. All four of them; yes, sir.

XQ395. When was the Laurentide machine put in? A. That drawing is dated June 21, 1900. It was started April 7th and finished August 20th.

XQ396. Now, referring to the drawing, what assures the extent of the boss adjustment in these drawings? A. That distance there. That is a table bar right there. It came up and struck the end of the side bar and could not get any further.

XQ397. Could these machines of the Berlin Mills and the Laurentide have the breast roll depressed below the level? A. The Laurentide had an allowance made for one inch below level.

XQ398. How about Berlin Mills? A. It had no adjustment provided for. You could probably get a very small amount below.

XQ399. How about the St. Regis and Remington-Martin machines, did they have adjustments below the level also? A. I cannot tell you until I look it up.

XQ400. I don't know as I care. A. I will get it if you want it.

XQ401. Were they permissible like the Laurentide mill? A. Probably they were.

XQ402. When did your company build the first machine that it built with a high pitch to the wire? A. I will have to look it up.

XQ403. Will you do that? A. The Oji machine with 10 inches in 1907.

XQ404. Where is the Oji Paper Company located? A. The village of Tomakomi on the island of Hokaido in Japan.

XQ405. How did you happen to put in the 10 inch pitch on that machine? A. Because they specified it.

XQ406. Is it now the usual practice of your company in news machines to build them with a high pitch? A. We build them just as the purchaser specifies.

XQ407. Well, but what does the purchaser specify, usually? A. Well, he may specify four inches, six, ten twelve; any amount.

XQ408. How much ordinarily, what is the usual practice? A. Ordinarily they are pitched up about ten inches, to twelve inches, with the high slice for some companies, and ten inch slice for other companies.

XQ409. By what means is that pitch imparted to the wire? A. The pitch is put in either by a solid wedge-shaped casting laid on top of the foundation plates, or in some cases the foundation plates are built up on an angle.

XQ410. And where you put it in in a wedge the blocking

goes all the way down to the guide roll, does it? A. And the suction box frames, yes, sir.

XQ411. So that the suction box frames are blocked up, too? A. Yes, they are tilted.

XQ412. So the suction boxes have a share in the inclination of the wire? A. Yes, sir; correct.

XQ413. Can you say from your recollection about when it was that this practice of putting in the high pitch under the wire began? A. Wait until I get that drawing for you. About 1907.

XQ414. Do you know whether your company put in any other machines having a 3 inch adjustment following these four that were built in accordance with Exhibit T prior to the year 1907? A. That is one of the things I will have to find out for you.

XQ415. Find those out. A. Further back we have been talking about four machines built like Exhibit T, but I think I shall have to cut that down to three. I can't find a record of a fourth.

XQ416. How much did the Berlin Mills machines trim in width? A. The Berlin Mill machines were 161 wire and you can trim fourteen to sixteen inches less according to the condition of your roll.

XQ417. This catalogue says that those machines were making forty tons of paper a day apiece? A. Yes, sir. They were running night and day, I suppose; twenty-three hours.

XQ418. Will you please figure out how much that means in feet per minute? A. Yes, I can.

XQ419. I wish you would. A. I can answer that near enough if you don't want exact feet. Do you want it within two feet? 425 feet will give you approximately forty tons a day on that width machine.

XQ420. Now, can you tell what was the next machine after the Oji machine that you put in with the high pitch? A. Yes, sir. Do you want them right up to date?

XQ421. Yes, if you can do that. (No answer.)

XQ422. You have told me off the record that you would rather not give these details unless necessary and in view of that wish I will not press that question. A. Thank you.

XQ423. Is it a fact that practically all the news machines which you built, beginning in 1907, have had this high pitch? A. High pitch or its equivalent.

XQ424. By that you mean to include such combinations of pitch and high slice as you have referred to in that list of machines that you gave? A. Yes, sir.

XQ425. And this change came about in the year 1907? A. I think so; yes. Let me change that a little, will you?

XQ426. Yes. A. We did not use our first high slice until 1911.

XQ427. The high pitch came in 1907? A. Yes, sir.

XQ428. What I am asking you about is how the high pitches happened to come in in 1907? A. Due to a general evolution in the art, when they were beginning to learn more about high speed.

XQ429. Well, it was a fact that at that time people heard of this Eibel patent, wasn't it? A. I don't know.

XQ430. When did you first hear of the Eibel patent? A. I could not tell, positively.

XQ431. Well, about when was it? A. Probably about 1906 or 1907.

XQ432. Did you have a copy of it when it first came out? A. No, I never did.

XQ433. You saw it in the Trade Journal? A. I do not remember about that.

XQ434. Where did you see it? A. I cannot tell you that. I heard about it.

XQ435. How did you happen to hear about it? A. Just in mills. We go from mill to mill and we talked about this Rhinelander scheme of raising the wire, and it soon became general knowledge.

XQ436. Do such things travel pretty fast in the trade? A. Very fast, indeed.

XQ437. Well, that excited a good deal of comment at that time, did it not? A. Yes, sir.

XQ438. And mills generally immediately began to fix their wires in accordance with the Rhinelander scheme generally throughout the country, so far as you are acquainted with it?

Mr. Paul: That calls for your personal knowledge.

A. Well, it is so in news mills.

By Mr. Lyman:

XQ439. Now, in cases where the machines were already installed that high pitch was applied by putting blocking underneath the breast roll end, wasn't it? A. Yes, sir.

XQ440. Now, it is true, is it not, that among other mills that did that in the year 1907, that is, put in these high pitches by blocking, were the Berlin Mills new machines which are referred to in your catalogue, the Remington-Martin Company new machines that are referred to in your catalogue, the Raymondville Company new machines which are referred to in your catalogue, the Laurentide Company machine referred to in

your catalogue and the St. Regis Paper Company machine referred to in the catalogue? A. They probably did, but I am only sure about Berlin Mills.

XQ441. You mean you never saw the other machines that I referred to? A. I am not sure about having seen those. I heard about them. I did see the Berlin Mills.

XQ442. As to the St. Regis Company, can you say whether these high pitches were put in in 1907 or not? A. I cannot say.

XQ443. But you have seen them up there? A. I have.

XQ444. And know they were put in at some time about that period? A. Yes, sir.

XQ445. Now, isn't it true that the Berlin Mills after they put in their high pitch increased their production from about forty tons per machine per day to about fifty tons per machine per day? A. Yes, but it took quite a period of time before they reached the increase of ten tons. It was not done at once.

XQ446. It did follow upon the putting in of the high pitch, however? A. They increased their production.

XQ447. The Remington-Martin Company also increased its production after it put in this high pitch, did it not? A. I don't know.

XQ448. Do you know at what speed the No. 1 machine of the Remington-Martin Company is running at the present time? A. I do not.

XQ449. This catalogue speaks of the Remington-Martin 163 inch machine as running at 460 feet a minute? A. Yes, sir.

XQ450. Now, as a matter of fact that machine since the pitch was put in has run up to in the neighborhood of 550 to 575 feet per minute, has it not? A. I have been told so.

XQ451. Haven't you seen it running at those speeds? A. I have seen it something over 500. Will you let me make a statement right here?

XQ452. Yes. A. I am sorry to say the Remington-Martin machine was our first wide machine and for a while we had considerable trouble with it. It could run at only a little over 450 feet a minute because there was certain rolls in it,—I do not think this ought to go on the record. I know what you are getting at.

Mr. Paul: Let it go on the record.

A. Certain rolls sprung and they could not run the machine faster until we put in new couch rolls and added a third press.

XQ453. When did you do that? A. I can give you the date; it is upstairs; when we did it. That is why the Remington-Martin never did as well on the big machine as they did on the

little one for a long time. The couch roll was changed March 9, 1903, and the third press was added August 9, 1904.

XQ454. Now, the Raymondville Company also, after it put in the high pitch, raised its speed, didn't it, on these same machines that were spoken of in your catalogue? A. Only a small amount.

XQ455. It did raise the speeds? A. I believe they went once to 632 feet for a short period of time.

XQ456. Did they have two machines? A. Yes, sir.

XQ457. On which machine was it that they got the 632 feet? A. The second machine.

XQ458. And the one that is referred to in your catalogue? A. No, not that one, the one built later than that. The one that was built in 1905. The first one was built from March, 1904, to January, 1905. The second one was built from June to November, 1905.

XQ459. What speed did they get on the No. 1 machine after they put in the high pitch? A. I cannot tell you.

XQ460. It was an increase over what they got before they put in the high pitch, was it not? A. I do not believe it.

XQ461. Now, how about the St. Regis, did they increase their speeds after they put in the high pitch? A. I do not think so.

XQ462. Have you any personal knowledge on that question? A. No, I have not.

XQ463. Now, do you know how much the Laurentide increased its speed after it put in its high pitch? A. I do not.

XQ464. You will say that you do not believe the speed on the Remington-Martin No. 1 was increased after it put in its high pitch? A. This No. 1 is supposed to be a 100 inch machine?

XQ465. Yes. A. I do not believe they did.

XQ466. Do you suppose they got better paper after putting in the high pitch? A. They might have gotten better formation; perhaps they did. I don't know.

XQ467. They probably had some reason for putting it in, naturally? A. Might be.

XQ468. That wide Remington-Martin machine in spite of its giving you trouble was good enough to be referred to in your catalogue as an illustration of what Bagley & Sewall Company could do? A. For width. That was the widest machine ever built at the time. That is the reason we were so proud of it.

XQ469. Now, these speeds that you mention there I take it to have been something unusual at that time, that you mention in your catalogue? A. Yes, sir.

XQ470. What was the usual speed at that time for news machines? A. From 400 feet up to 500 feet or thereabouts.

XQ471. And usually nearer 400 than 500? A. Yes, sir.

XQ472. When higher speeds than those were attained, if they were attained, that meant specially prepared stock, did it not? A. Not necessarily. It meant better construction in the machines.

XQ473. I notice that the newspaper article here has a good deal to say about the carefully ground stock at high speed? A. That has something to do with it; more sulphite.

XQ474. You had to use more sulphite and had to grind your stock carefully, didn't you? A. Naturally, yes, sir.

XQ475. Now, isn't it true that where you use a high pitch you can get good paper without using this excess of sulphite or without special grinding of stock? A. No. The higher the speed the more of sulphite every time.

XQ476. Are news paper manufacturers using a greater percentage of sulphite today than they did in 1906 and in 1905? A. I think so.

XQ477. How much greater? A. There was a time when twenty per cent sulphite was considered high. Now it runs from twenty-five to thirty.

XQ478. Anything more than thirty per cent is excessive sulphite today, is it? A. Yes, sir.

XQ479. What would you think of a paper that contained forty per cent sulphite? A. I should think that was pretty high sulphite. You were speaking of news paper?

XQ480. Yes, sir. A. I never heard of it as high as that.

XQ481. It would come pretty near ruining a paper manufacturer that used it? A. It would seem so.

XQ482. What percentage of sulphite do you think news manufacturers generally were using in 1905 when they were running at 400 feet or thereabouts? A. Well, I should think that 22 to 25 per cent would have been excessive; twenty would have been nearer the average.

XQ483. What do they use today? A. Many mills are using from 27 to 30 per cent. 25 is probably a fair average now.

XQ484. How much sulphite did they have to use on the Remington-Martin machine in 1905? A. I cannot tell you; I don't know.

XQ484a. Probably more than 25 per cent? A. I should not think so, no; not in 1905.

XQ485. I mean in that small Remington-Martin machine? A. Might have been 25 per cent in those days.

XQ486. They had to use more on that machine, on the stock

run in that machine, than news manufacturers were using on machines running at 400 feet? A. Naturally, yes, sir.

XQ487. How did you have to specially prepare your stock for machines that were running at high speeds in those days? A. I am not a paper maker. You do not catch me preparing the stock.

XQ488. You make grinding machinery, don't you? A. Yes, sir.

XQ489. Well, do I understand that the manufacturers who are now making news at 600 feet per minute with a high pitch have to grind their stock in any different or more careful manner than news manufacturers who in 1905 were running at 400 feet with a flat wire? A. I don't know.

XQ490. I suppose in putting in these figures in your catalogue you put your best foot forward, naturally? A. Yes, sir.

XQ491. Now, you do not know or do you know what the quality of the paper that was being made at the speeds referred to in the catalogue was? A. I don't know. It was called good quality news.

XQ492. But you don't know about it? A. I do not know a thing.

XQ493. What is the average speed which news is being made nowadays by a large,— A. 630 to 680 feet per minute.

XQ494. Could you let me see one of your latest catalogues? A. Yes, sir.

XQ495. When stock issues upon a wire under the influence of a head of 24 inches it comes out a great deal faster than when it issues at a head of 4 or 5 inches, naturally? A. Naturally.

XQ496. Don't you think that the formation of the sheet is affected in any way by the speed at which the stock issues? A. No, I do not.

XQ497. When it comes out under the influence of a high head does it come out with a great rush and a great commotion? A. No. Let me change that a little, that plain no. It is no, providing the speed of the wire is approximately the speed of the stock. Then there is no commotion.

XQ498. In 1906 what did you regard as the best installation that your company had put out at that time on news machines? A. I wish to correct a previous answer. I told you the two Raymondville machines were built in the same year. That is not so. The first Raymondville machine was built from November, 1901, to July, 1902. The second Raymondville was built from March, 1904, to January, 1905. It so happened in 1906 we did not build a single new machine, but in 1905 we fin-

ished up two of our best high speed news machines at that time, of which one was Raymondville which was finished in January, 1905, and the other was a machine built for the Willamette Pulp & Paper Company, and that was finished in August, 1905. Those were the two best one up to that time.

XQ499. You do not agree then with the statements of Mr. Lansing in this article that you have produced in the Paper Mill, dated February 10, 1906, "We consider the Berlin Mills the banner installation of the world"? A. That was the widest; they were not the fastest by any means. They were the widest.

XQ500. That Raymondville machine which you have referred to here was that the one built in accordance with Exhibit T? A. Yes, sir. That is Exhibit T.

XQ501. Now, you were going to find out what the other machines were that were built with 3 inch adjustment subsequent to these three that you have referred to? A. There was one machine built for the Willamette Pulp & Paper Company. Do you want the width?

XQ502. Yes. A. It was a 158 inch machine.

XQ503. And the date? A. It was built from June, 1907, to April, 1908. That had a raise of 3¾ inches at the breast roll. Now, the next one—I have one that is ahead of that, a 152 inch machine for the Crown-Columbia Paper Company that was built from February, 1907, to March, 1908. Those are the two.

By Mr. Paul: What was the amount of pitch?

A. 3¾ inches.

By Mr. Lyman:

XQ504. Then there were only two instead of three? A. Two instead of three of the wide ones and three of the narrow ones that were built that way.

XQ505. That is, like Exhibit T? A. Like Exhibit T, yes, sir.

XQ506. That had an adjustment on the breast roll? A. On the breast roll. Correct.

XQ507. Now, the three narrow ones were built in 1904? A. Yes, sir.

XQ508. Or 1905? A. The drawings are of the date of 1904.

XQ509. But you don't know whether they were finished in 1904 or 1905? A. Well, I can tell you if you want to know.

XQ510. I am not anxious to place it exactly. Either 1904 or 1905 will do for my purpose. A. Well, they were started in 1904, all three of them. Raymondville was started March 8, 1904, and finished January 8, 1905. Frost was started June 14, 1904, and finished January 8, 1905. Columbia River was

started the 15th of June and finished January, 1905; so all three came right along together.

XQ511. Now, between the completion of these three machines and the building of your Willamette machine in 1907 did you build other news machines? A. Yes, sir.

XQ512. How many? A. Five.

XQ513. And did they have any adjustment at the breast roll? A. They probably had a slight adjustment.

XQ514. How much? A. A matter of an inch and a half to two inches, but not with this construction.

XQ515. Was that adjustable either above or below the breast roll? A. It was probably just up from level to above, just like the Berlin Mills that I showed you about. When that table bar came up under the side bar that was the end of the adjustment.

XQ516. For whom were those five machines built? A. One was built for the Holman-Hellefors in Draman, Norway, and one St. Regis machine, and one for Fuji Paper Company and two for LaPetite Parisian.

XQ517. Was that St. Regis machine the one referred to in your catalogue here? A. It was one of the four.

XQ518. Was that the particular one referred to in your catalogue? A. I cannot say.

XQ519. Why did not you put that three inch pitch on those machines? A. It was not specified.

XQ520. But you consult with your purchaser always, don't you? And sell them what you think they ought to have for their purposes? A. Yes, sir.

XQ521. Why did not you suggest to them that they have a 3 inch pitch? A. He probably told us he did not want a 3 inch pitch.

XQ522. Why did he tell you that? A. Because he had not got to that point of running fast, just that pitch, and did not want it.

XQ523. Do you have any personal recollection that that was the way it happened? A. No. For the reason that Holeman-Hellefors was telegraphed in here from Norway. All the business was done by cable.

XQ524. The St. Regis business was not done by cable? A. No, sir. That was done in a very close personal business transaction.

XQ525. I wish you would find for me the specification for the machine that you put in at Niagara, Wisconsin, for the Kimberley-Clark Company? A. The last one, the 152?

XQ526. Well, this was in there in 1902? A. We have not

any in Niagara; we haven't any there. Rice, Barton & Fale machines are at Kimberly.

XQ527. You have one at Kimberly? A. We have one now, yes; a 152 inch machine.

XQ528. But you have not any at Niagara, Wisconsin? A. None at Niagara,—Rice, Barton & Fale's.

XQ529. Did you have anything to do with the putting in of that machine, No. 3, at Kimberly? A. I did. I sold it.

XQ530. When was that put in? A. That was built from August 28, 1909, to March, 1910.

XQ531. And what did that have for adjustment of pitch? A. I cannot tell you what the adjustment was, but it was a Moore & White adjustable Fourdrinier part.

XQ532. Do you know whether any changes were made at that time in the adjustment of the other Kimberly & Clark machines at that mill? A. I don't know.

XQ533. You were not there at that time? A. No.

XQ534. Will you look at your files and see whether what I hand you is a correct copy of a letter written by your company to the Rhinelander Paper Company on February 22, 1907?

Mr. Lyman: I would like to have the witness look at that.

Mr. Paul: I think I have a right to look at anything that is shown the witness.

Mr. Lyman: Of course I expect you will see it ultimately.

A. I think that is correct, sir.

Mr. Lyman: I ask that this be marked for identification with the letter X.

Letter marked Exhibit X-U.

Mr. Paul: I suppose that is subject to correction by the original letter?

Mr. Lyman: Yes.

XQ535. Do you agree with the statements made in that letter? A. Yes, sir, practically. There is a little thing there that might be objected to, but it is immaterial.

XQ536. What is the little thing? A. Well, Mr. Lansing says in his letter there that it is our custom to build Fourdriniers from two inches below to three inches above. We could do that but I doubt very much if we got as much as two inches below and three above with this type of Fourdrinier referred to, Exhibit T.

XQ537. Now, I want to read you a quotation from one of the patents on these adjustable Fourdriniers and ask you whether it is a correct statement of the purpose for which these adjustments were used. I refer to the Barrett & Horne patent, No. 634,228: "In certain kinds of pulp, notably wood pulp, which

is now largely used in making paper, the water drains away very rapidly so that the pulp may become nearly dry before it leaves the shake frame and thus not be properly laid when it reaches the roll. This tendency may be obviated to a considerable extent by downwardly inclining the shake frame toward the rollers so that the water tends to travel along with the pulp and will not therefore drain out through the wire so rapidly. It is further desirable that the amount of inclination or slope should be variable so as to adapt the machine for pulp to different kinds or grades." A. What is the date of that?

XQ538. That was taken out in 1899. A. I know it. What was the question?

XQ539. Whether you agree with that, whether that substantially expresses your view of the purpose of these adjustments? A. Yes, sir.

XQ540. Now, on that matter, isn't it a fact that the practice, the regular practice in making bag paper prior to 1906 was to run the wires slightly uphill, an inch or two uphill? A. Sometimes. It is yet, in some mills.

XQ541. Wasn't that the regular practice, the prevailing practice? A. I would not say about that.

XQ542. You don't know? A. I do not know, prior to 1906.

XQ543. You would not be inclined to say that the Eibel high pitch had not done a good deal for the paper making art, will you? A. Say that again.

(Question read by stenographer.)

A. I do not think it has done anything for the art.

XQ544. Are you living in fear of a suit for infringement under the Eibel patent? A. No.

XQ545. The reason you did not wish to mention the specific instances in answer to one question that I put you stated to be that you did not want these things used against you in case we ever sued you for infringement? A. I did make that statement, yes.

XQ546. So you contemplate the possibility that you may sometime be sued for infringement of this Eibel patent? A. No, we did not contemplate it. Of course there is a possibility.

XQ547. So you have an interest to have this patent beaten? A. No, sir, not at all.

XQ548. I notice that in one of your answers to Mr. Paul you said he must know the facts about the Palmer Falls mill because it was owned by the Warren Curtis Company? A. Warren Curtis was the original president, yes, sir.

XQ549. Why should that put the facts as to that in Mr. Paul's possession? A. The same as in your possession. It is

public property. Everybody knew what was going on at Palmer Falls.

XQ550. You do not answer my question. Why should Mr. Paul have particular knowledge about what happened at Palmer Falls because Warren Curtis owned it, owned the mill? A. Because he has been digging up information in reference to that mill and that particular machine, I expect.

XQ551. What had Warren Curtis to do with it? A. Warren Curtis was the father of modern paper making.

XQ552. Why did you say it in that connection? A. Why, I spoke of Warren Curtis in connection with the paper machine the same as you would Charles T. Porter in connection with steam engines.

XQ553. Do you know whether anyone else besides the Minnesota Paper Company has helped to defend this case? A. I do not know a thing about it.

XQ554. Have you heard any such statement? A. No, sir.

XQ555. Have you contributed to the defense? A. Not I; no, sir.

XQ556. Has your company? A. No, sir; not to my knowledge.

XQ557. I notice that this catalogue of the Bagley & Sewall Company speaks of a Willamette Pulp & Paper Company machine in 1892 made 480 feet a minute? A. Yes, sir.

XQ558. Is that a mistake for 1902? A. I do not think so.

XQ559. You told Mr. Paul on direct examination, didn't you, that the speed of paper making machines in 1893 was usually 250 to 300 feet a minute? A. I did.

XQ560. Now, will you just look at your records and see whether that was in 1892 or 1902? A. I cannot tell. I told Mr. Paul yesterday; that is not on the examination; that the Willamette Pulp & Paper Company did things on the Pacific Coast twenty years ago that were never thought of in the east, and that 1892 I have not any doubt but what is right.

XQ561. What machine was it? A. Well, we built them two machines. In 1890 and 1891, that is we started in 1890 and finished in 1891, we built for the Willamette Pulp & Paper Company an 84 inch machine.

XQ562. And that is the one you have reference to in this— A. In 1892 we built them a 102 inch machine.

XQ563. Which was referred to in this statement? A. Yes, sir. But I cannot tell you,—that does not give the width there, does it? There is no doubt about that. That is one of the exceptional cases. Nobody else in the country could do that; that was exceptional.

XQ564. You spoke about C. R. Remington, he was president of the Remington-Martin Company, was he not? A. I don't know. He may have been president.

XQ565. He was connected with the Remington-Martin Company? A. Yes, sir.

XQ566. And the Remington-Martin Company has since been absorbed, taken over by the Remington Paper & Power Company? A. Correct.

XQ567. Did you ever try running a machine with the suction boxes level and the breast roll raised six inches? A. I do not think so.

XQ568. Did you ever see it tried? A. I do not think so.

XQ569. Don't you think there would be difficulty in starting the machine at such an elevation as that with the suction boxes level? A. I think you might get in trouble, although it might go that high; you cannot tell.

XQ570. Referring to this Exhibit T, is there any way of raising those suction boxes above the level at which they are set there without blocking up the standards of the suction box rails? A. Not the way that machine was built.

XQ571. You say you have seen a machine running 525 feet with no shake? Where was that? A. I could not tell you positively. I have seen several running that way.

XQ572. Let us have one of them? A. No. I would only be guessing if I told you. It was too long ago.

XQ573. A statement like that does not do us much good unless you can tell us where we can find it. A. When you think of all the mills a fellow is in all his life and then try to get down to a detail like that, he cannot remember.

XQ574. When did you begin this practice of putting the slices over the center of the breast roll? A. I cannot tell you positively unless I go upstairs and hunt up a drawing; but it is not a great while. I should say approximately five years.

XQ575. You say in 1896 you began to build machines with the breast roll an inch and a half below the level? A. Yes, sir.

XQ576. Whereas previously it had been ¾ of an inch below the level? A. Yes, sir.

XQ577. Why did you put it lower below the level in 1896? A. That is about the time they began to speed up and someone had the mistaken idea that it would be better to drop the breast roll.

XQ578. Who had that idea? A. These particular machines were built for the Piercefield Paper Company. I cannot tell you who the individual was that had the notion.

XQ579. How do you know it was in 1898 or 1899 that you

saw that machine running at 500 feet at Palmer Falls? A. Because I was there at that time and happened to make a notation in my note-book.

XQ580. Where is your note-book? A. I have it right here.

XQ581. Let us see the entry. A. (Witness produces entry and shows it to counsel.)

XQ582. According to that entry there were two machines running on September 25, 1899, at Palmer Falls? A. Yes, sir.

XQ583. One of them 145 inch machine at 425 feet per minute and the other a 90-inch machine at 512 feet per minute? A. Yes, sir.

XQ584. What does that mean? A. 325 indicated horse power.

XQ585. You did not make any note of any blocking at that time under the machine? A. I did not.

XQ586. Would you have been likely to if you had seen any there? A. The chances are I would have because that would have been a novelty, or unusual practice; either way you want to put it.

XQ587. When you saw that machine that was built according to Exhibit T for Camas did it have blocking under it? A. O, I could not tell. That machine has been rebuilt since it was built originally.

XQ588. That is, you do not remember? A. I do not remember.

XQ589. At what time during the year 1905 was this catalogue of yours issued? A. I cannot tell you, sir; I don't know.

XQ590. Which way does that ripple that you were speaking about extend when the stock is going faster than the wire? A. If the stock was going faster than the wire the stock would have a tendency to run ahead and the ripple would be farther back on the deckel straps.

XQ591. You mean that there would be a ripple extending out from the deckle straps in towards the center of the sheet? A. Yes, sir.

XQ592. In one case it would run in from the deckle straps inwardly towards the rear of the machine and in the other case it would run from the deckle straps inwardly towards the front of the machine? A. Let me think about—your question is, if the paper ran faster than the wire?

XQ593. Yes. A. Yes, sir. If the paper—there is your deckle strap (indicating). If the paper ran faster than the wire you would get a ripple or shape.

XQ594. Which is the breast roll end? A. This is the breast roll end up here. If the wire ran faster than the paper

you would get a ripple or shape.

XQ595. In the sketches which you have just made you show, in the case of the stock running faster than the wire, a U shaped ripple with its edges on the deckle straps and the bend of the U pointing towards the couch roll? A. Yes, sir.

XQ596. And another sketch representing the condition which you say exists when the wire is going faster than the stock in which there is a U shaped ripple extending from deckle strap to deckle strap with its ends on the deckle straps and its convex parts pointing towards the breast roll end of the machine, is that right? A. Yes, sir.

XQ597. Is that the only effect that you notice on the wire when there is a difference in the speed between the stock and the wire? A. Well, there are always more or less ripples.

XQ598. How much do you think is the allowable variation between the speed of stock and speed of wire? A. I would not say what was the allowable.

XQ599. You don't know anything about that? A. I do not know anything about it.

XQ600. And yet you have attempted to say two or three times what it was? A. No, I do not attempt to say. I was simply asked what my opinion was.

XQ601. You purport to give your opinion about things that you do not know anything about? A. If I qualify it.

XQ602. You are not much of a paper maker, I take it? A. I am no paper maker. I do not claim to be.

Mr. Lyman: Let us see those letters from these different fellows, those three letters.

(Mr. Paul produces letters.)

XQ603. You do not know anything about the actual depth of the pond that is carried by these paper makers that are using your high slices, do you? A. No, sir.

XQ604. When did you make that table you put in evidence of spouting velocities? A. O, I started it—I will give you the exact date.

XQ605. Just recently or some time ago? A. O, years ago.

XQ606. Several years ago? A. Several years ago. If you will wait a minute I will tell you. The original table is upstairs with the date on it.

XQ607. I do not want it. This catalogue says that the Raymondville machine which was running at 540 feet a minute, according to the statement here, was the most productive machine in the world. Why was it the most productive machine in the world if there was a Remington-Martin machine that was running at 618 feet? A. It was because it was safest running

machine in the world. The loss by breaks was the lowest on that machine,

XQ608. Were there any more or any less breaks on that machine than there were on average low speed machines? A. Yes, sir.

XQ609. There were more breaks? A. Less breaks.

XQ610. Than on a low speed machine? A. Yes, sir.

XQ611. And were there less breaks on that machine than on the Raymondville small machine, on the Remington-Martin small machine? A. That I cannot say, but it had a record of producing 632 pounds of paper per inch of wire for the day which was the highest in the world at that time.

XQ612. Do you know whether that speed, whether those other high speeds were maintained regularly? A. They were not. Not that 618 or that 632 we were talking about. Those were spurts at that time. I do not know what they do now. They were a two and three hour run.

XQ613. What was the reason they could not run at that speed constantly? Breakage? A. Not so much that. They did not have power, and their pulp conditions were not right.

XQ614. What about that 585 feet speed, was that a spurt, too, or was that maintained? A. No, sir; that could be a sustained speed, or maintained speed, whichever you want to call it.

XQ615. Do you know whether it was maintained? A. Yes, sir; for months and months.

XQ616. Was it finally dropped down? A. I cannot tell you. I don't know.

XQ617. This article in the Paper Mill of February 10, 1906, by Mr. Lansing in the last paragraph talks about an instance that occurred at one of the mills where we have a large installation of machines. Can you tell what that refers to? This paragraph here at the end of the quotation, a large installation of machines? A. No, sir, I do not know what that refers to.

XQ618. You have said that the effect of pitch on the wire resembled the effect of a head behind the slices? A. Yes, sir.

XQ619. When you say that are you talking theory or practice? A. Talking theory.

XQ620. Do you feel yourself competent to speak about that from a paper maker's point of view? A. I do not care a darn what the paper maker's point of view is. It is according to the theory of the best engineering practice in the world.

XQ621. You have stated all your reasons for that, have you? A. I can show you the publication that bears it out by one of the most eminent engineers in the United States.

XQ622. Well, what is the publication? A. Right here in Trautwine. Here is a picture of the whole business, if you would like to look at it. That is something you do not have to take my word for this time. Just read that little chapter here and there. "Flow of water through pipes." That settles the whole thing.

Mr. Lyman: I won't stop to read that. It is noted that the witness refers to pages 236 and 237 of Trautwine's Civil Engineers' Pocket Book, edition of 1900, the article numbered one beginning near the bottom of page 236 and extending for about a page. Cannot we put that in evidence?

Mr. Paul: I will get a book and let you see it.

By Mr. Lyman:

XQ623. What about the matter of drainage, would you expect that to be similarly affected by a pitch on the wire and a head back of the slices, providing the stock on the wire and the wire run approximately the same speed? A. Yes, sir.

XQ624. You get better drainage when there is speed equality between stock and wire than otherwise? A. Sure. Theoretically at equal speed. Your water drops right straight through.

XQ625. Do you know why it was—in this letter from A. J. Lewthwaite on October 1, 1904, he said, "I do not care to slow machine down to 540 yet in order to get samples out at that speed"? A. Because the question was being agitated then whether paper at a slow speed was any better quality than paper at a high speed.

XQ626. The extract which you have quoted from Trautwine is your only authority in supporting the position you have taken as to the equivalency of an inch of pitch to an inch of head back of the slices, is it? A. That and the general knowledge of hydraulics.

RE-DIRECT EXAMINATION.

By Mr. Paul:

RDQ627. You are not prepared to say that there was not any blocking under those machines that you saw at Palmer Falls in 1899, are you? A. No. Nor that there was.

RDQ628. You simply don't remember? A. I cannot remember. I cannot tell a thing about it.

RDQ629. The fact that you have not any note of it does not prove anything to you, does it, as to that? A. It might prove that there was not any blocking because had there been I probably would have made note of it.

RDQ630. But you might not have? A. I might not have.

RDQ631. You at this time do not remember whether there was any or not? A. I do not remember.

RDQ632. Now, do you know whether when the Berlin mills put in the, what you call the high pitch, whether there was any change made in the machines that had anything to do with the increase in production? A. No change to my knowledge.

Signatures waived.

Printing of notary's certificate waived.

DISTRICT COURT OF THE UNITED STATES,
DISTRICT OF MAINE.

EIBEL PROCESS COMPANY, Plaintiff,
vs.
MINNESOTA & ONTARIO POWER COMPANY, Defendant.
In Equity, No. 769.

Depositions taken on behalf of defendant in the above entitled case before John M. Reeve, Notary Public, commencing on Thursday, June 21, 1917, at 10:40 A. M., at the office of The Moore & White Co., 15th street and Lehigh avenue, Philadelphia, Pa., pursuant to stipulation and agreement of counsel, without notice, notice being waived.

Appearances: On behalf of plaintiff, Harrison F. Lyman, Esq. On behalf of defendant, A. C. Paul, Esq., and M. M. Moore, Esq.

And thereupon the following proceedings were had:

JOSEPH ATWOOD WHITE,

a witness called on behalf of the defendant, being first duly sworn, deposes and says, in answer to questions by Mr. Paul, as follows:

Q1. Please state your full name. A. Joseph Atwood White.

Q2. How old are you? A. Sixty-one.

Q3. Where do you reside? A. Philadelphia.

Q4. How long have you lived in Philadelphia? A. Since 1876, over forty years.

Q5. What is your business? A. Building paper machinery.

Q6. With what company are you connected? A. The Moore & White Company.

Q7. Is that a corporation? A. Yes.

Q8. What is your office in the corporation? A. I am the president.

Q9. How long have you been connected with The Moore & White Company? A. Since 1885.

Q10. What is the business of that company? A. Building paper mill machinery.

Q11. Has it been engaged in that business all the time that you have been connected with it? A. Yes.

Q12. Do you build what is known as "Fourdrinier" machine? A. Yes, sir.

Q13. How long have you been building machines of that kind? A. Since starting in the business.

Q14. Are you one of the patentees of Letters Patent offered in evidence here as Exhibit K, No. 684081, issued October 8, 1901, to John W. Moore and Joseph Atwood White? A. Yes.

Q15. You are the Joseph Atwood White mentioned in the patent, are you? A. Yes, sir.

Q16. Has your company manufactured the devices of the general construction shown in this patent No. 684081? A. We have.

Q17. And about when did you begin manufacturing the devices of this patent?

Mr. Lyman: Question objected to as involving matters not referred to in the answer and it is stipulated that the same objection may be taken in regard to all further questions along this line without repetition.

By Mr. Paul:

Q18. About when did you begin manufacturing the devices shown in the drawings of the patent to which I have called your attention? A. Well, the first machinery built of that patent was for W. C. Hamilton & Sons, and I can get the date of that, if you want it.

Q19. Where are W. C. Hamilton & Sons located? A. At William Penn Postoffice, Montgomery County, Pa. It is right above Manayunk. It is at Lafayette Station, Montgomery County, Pa.

Q20. Please state whether you have continued to manufacture these machines from the time of the Hamilton order down to the present time. A. Yes.

Q21. Can you, by referring to your records, give the date of the W. C. Hamilton order? A. August 26, 1895.

Q22. How soon after the date of the order was that machine delivered, about how soon? A. Within a year, I would say.

Q23. Have you got the date here on your records? A. Yes,

February 15, 1896.

Q24. Did you at any time receive an order for one of these devices from the Beloit Iron Works? A. Yes.

Q25. Have you the record of that order here? A. Yes.

Q26. What is the date of the order? A. Our date of order is October 20, 1904.

Q27. What does that mean? Does that mean the date when you received the order? A. When we received the order from them. The date of their order would probably be a few days prior to that. We entered the order in our books October 20, 1904.

Q28. What are the sheets you hold in your hand? A. This is the record of our order from them.

Q29. And what is shown on these various papers in a general way? A. This order calls for two shakes for "Fourdrinier" paper machine, one 138 inches wide and one 118 inches wide.

Q30. What were those to be built from? A. Built from drawings submitted dated April 6th and 8th, 1900.

Q31. That refers to the date of your drawings? A. Yes, that is our drawing.

Q32. Now, there are several sheets of this order, the first sheet bearing the order No. G4376. Is that your order number? A. Yes, that is our order number.

Q33. And then following them are some three sheets of blue prints and then three manila sheets and one sheet of blue print. Now, what do these seven sheets make up? Are they the details of the order? A. They are the details.

Q34. And the parts ordered? A. The parts necessary to complete the order.

Q35. Do these contain a list of all the parts that you furnished? A. Practically.

Q36. Are you familiar with the drawings that were used in the completion of this order? A. I am.

Q37. Have you those drawings here? A. Yes.

Q38. Do you have the blue print for this order? A. This is the print (producing print).

Q39. Does it bear the same order number? A. Yes, G4376.

Q40. And do you identify it by that number? A. Yes.

Q41. Now I ask you to compare that blue print with the blue print that has been marked for identification as Defendant's Exhibit R, and state whether or not these are duplicates? A. They are duplicates, yes.

Q42. Do you have any detail drawings showing the parts making up the mechanism that you sold to the Beloit people? A. Yes.

Q43. And have you the drawings showing those details? A. I have.

Q44. How is that drawing marked? A. This is our standard drawing of the different parts. The order numbers referred to before specify these different parts.

Q45. What general sheet number is on this drawing? A. Well, these are all cut up. For instance, sheet No. 16 calls for the particulars of the adjusting mechanism.

Q46. Each panel on here is marked sheet No. 16, isn't it? A. Yes. This sheet 16 refers to the sheet as a whole.

Q47. And the individual drawings are separately numbered beginning with drawing No. 1? A. Yes.

Q48. How many drawings are there on this sheet No. 16? A. Eight on this sheet.

Q49. Do any one of the drawings on this sheet No. 16 show the details of the adjusting screw that was furnished with this Beloit order? A. Drawing No. 7 shows it.

Q50. Does the order card or any one of them identify the adjusting screw? A. Yes.

Q51. Will you find that on this order? A. Yes, here it is, four brass vertical adjusting screws, "2 F 19" is the symbol number.

Q52. "2 F 19" is the symbol number on the blue print order card? A. Yes.

Q53. That is the second card of this order, is it not? A. Yes.

Q54. How does that symbol which you have designated as being applied to the four brass adjusting screws apply to the drawing and on which drawing do you find it? A. The symbol refers to the standard drawing.

Q55. And does that appear on this drawing before you? A. Yes, that is on this sheet, drawing No. 7.

Q56. What does it apply to? A. Applies to the screw.

Q57. And are the dimensions of the screw given? A. It gives all the dimensions, yes.

Q58. What is the length of the threading part of the screw as given by this drawing? A. 9 5-8 inches.

Q59. And what is the length of the bearing part? A. 6 5-8 inches.

Q60. Now, will you look at the drawing which has been marked for identification as Defendant's Exhibit R, and state whether you find that same mark on these drawings and, if so, whether any letter has been applied to it on the drawing. A. The adjusting screw is shown on this print and is marked "A."

Q61. Marked with the reference letter "A"? A. Yes.

Q62. Is that the same screw that is marked "2 F 19" on drawing No. 7 of your sheet No. 16? A. Yes.

Q63. Please state whether the adjusting screws furnished the Beloit Iron Works with this order identified by you, were the same as the screw "2 F 19" on drawing No. 7 of sheet 16. A. They were.

Q64. Was that a standard construction that you had that time? A. Yes.

Q65. And was it furnished with other machines beside those sold to the Beloit Iron Company? A. Yes.

Mr. Paul offers for identification the order produced by the witness, No. G 4376 for Beloit Iron Works, dated October 20, 1904, consisting of, first a manila card containing a copy of the order, then three blue print cards, the second one giving the bill of material, the third and fourth giving details of parts, the fifth a manila card containing the designation of the order, and the next two manila cards containing a further bill of material and a blue print card also containing bill of material, the seven cards being numbered for convenience by the Notary one to seven, both inclusive, the same to be marked for identification "Defendant's Exhibit U."

Counsel for defense also offers for identification blue print sheet No. 16 produced by the witness, containing drawings one to eight, both inclusive, to be marked for identification, "Defendant's Exhibit U-1."

By Mr. Paul:

Q66. Your records show when these devices were shipped to the Beloit Iron Works? A. Yes.

Q67. Can you refer to them and give that date? A. Shipped December 2, 1904.

Q68. Are the parts that you furnished all designated on this order "Defendant's Exhibit U"? A. Yes, that is the shake post. Of course, it doesn't go into very much detail; but they are all shown here.

Q69. And they are all designated on this order card marked, "Defendant's Exhibit U?" A. They are all designated, although we don't supply it all. We don't supply the shake rail.

Q70. But did you supply the other parts as shown on Exhibit R? A. We don't supply the breast roll.

Q71. Anything else you recognize that you did not supply? A. No, we supplied all the rest.

Q72. Did your company at any time issue a folder or circular illustrating these devices? A. Yes.

Q73. Will you look at this paper which I hand you now and state what that is. A. That is a circular we issued about the

time we started to build the machines.

Q74. Does that cut, on the first page, illustrate in a general way the construction of the device? A. Yes.

Q75. And is this descriptive matter directly applicable so far as it goes with this construction? A Yes.

Q76. I notice that certain testimonial letters are printed on this circular. A. Yes.

Q77. Are the names there appearing names of customers to whom these machines have been sold? A. Yes.

Q78. These testimonial letters appear to be dated, all of them, in the year 1900. Will that enable you to fix about the time when this circular was printed? A. That was about the time the circular was issued, in 1900. Evidently we have written for these testimonials and got them all about the time we issued this circular.

Q79. That would correspond with your recollection of the issuance of the circular? A. Yes.

Mr. Paul: I ask that this folder be marked for identification, "Defendant's Exhibit U-2."

Mr. Lyman: I understand the same objection previously made to questions applies also to exhibits.

By Mr. Paul:

Q80. Have you any list or memorandum to which you can refer to give the names of persons to whom you sold machines of the kind here illustrated in the Beloit Iron Works' order prior to 1906? A. Yes. I herewith produce a list of such customers.

The list produced by the witness is as follows:

Ordered	Shipped	
July 25, 1899	Feb. 2, 1900	Merrimac Paper Company, Lawrence, Mass.
June 5, 1897	Oct. 11, 1897	Jessup & Moore Paper Company, Augustine Mills, Wilmington.
Jan. 21, 1896	June 29, 1896	Jessup & Moore Paper Company, Kenmore, Md. (Formerly W. M. Singerly.)
Aug. 21, 1901	Jan. 21, 1902	Standard Paper Company, Richmond, Va.
Aug. 26, 1895	Feb. 15, 1896	W. C. Hamilton & Sons, Wm. Penn P. O., Pa.
Dec. 21, 1897	June 22, 1898	Dill & Collins Company, Philadelphia, Pa.
May 10, 1902	June 30, 1902	New York & Penna. Company, Lock Haven, Pa.
March 4, 1904	March 16, 1905	Cherry River Paper Company, Richwood, W. Va.

March 3, 1900	March 29, 1901	C. S. Garrett Company, Buck Run, Pa.
Dec. 7, 1900	Sept. 12, 1901	Hammermill Paper Company, Erie, Pa.
May 3, 1899	Sept. 19, 1899	Nixon Paper Company, Manayunk, Phila., Pa.
Jan. 18, 1902	Oct. 9, 1902	Miami Paper Co., West Carrollton, Ohio. (Formerly Geo. Friend Paper Co.)
June 21, 1902	Aug. 31, 1903	Compania General de Fosforos, Buenos Aires, Argentine Republic.

Q81. When you first began building devices as shown in the blue print, Defendant's Exhibit R, and Exhibit U-1, did you use adjusting screws of the same length as those shown in this blue print? A. I don't know whether that is just what you mean to ask or not. That refers to this particular print, doesn't it?

Q82. I want to know whether, when you first began building these devices, you used the same length screw. A. You mean in 1900.

Q83. Yes, when you first began using them. A. The first we made didn't have any screw.

Q84. But the first you made with the screw, were the screws the same length as this or substantially the same length? A. I couldn't say without looking back to more previous drawings. I can find out.

Q85. Have you here drawings of any of the earlier machines? A. We have.

Q86. What is this drawing that I now call your attention to? A. Drawing D2730, Hammermill.

Q87. Is that an earlier order than the Beloit order? A. Yes, this is earlier. That was built from the same order.

Q88. Is the screw the same length on that? A. Yes, that was December 12, 1900.

Q89. Do you find the date on the blue print? A. Yes.

Q90. Then you were using the same length screw as early as 1900? A. Yes.

Q91. Now, I call your attention to another blue print and ask you to state what machine that refers to. A. This was a machine built October 21, 1901.

Q92. And for whom? A. Nixon Paper Company.

Q93. What is the length of the screw in that machine? A. Practically the same, 9½ inches.

Q94. Can you furnish me with blue prints of these two draw-

ings, the Hammermill Paper Company and the Nixon Paper Company? A. Yes.

Counsel for defendant requests that the blue prints of these last named machines, be marked, the Hammermill Paper Company's print as "Defendant's Exhibit U-3" for identification and the Nixon Paper Company's print as "Defendant's Exhibit U-4" for identification.

Q95. With the devices constructed as shown in the blue prints Exhibit R and Exhibit U-1, what amount could the breast roll of the "Fourdrinier" machines be lifted above the level? A. It is a question how far. In the design of the machine, I suppose that they would raise it three or four inches above the level, but it could be raised five or six inches if they wanted to take the chances on it. Do you mean the extreme heighth it could go?

Q96. Yes, the extreme heighth to which it could be raised and the parts still remain in operation. A. Well, I would say that they could raise it about 5½ inches. That would be about as far as I would want to raise it.

Q97. Could you raise it 5½ inches safely? A. Oh, yes.

Q98. What would be the effect if you raised it more than that? A. Well, it would be hard on the screw. You would only have about an inch of the screw left in the nut.

Q99. You could raise it 5½ inches and still have an inch of the screw left in the nut? A. An inch and a half.

Q100. And if you raised it six inches you would have an inch left in the nut? A. Yes.

Q101. So that it would be possible to raise it six inches and still leave an inch of the screw in the nut? A. Yes.

Q102. Now, with that construction, could you adjust the machine so as to bring the breast roll end of the wire any below the level? A. Yes, that would come two inches below the level.

Q103. Then this was capable of adjustment two inches below, could be raised six inches above and leave the screw one inch in the nut? A. Yes.

Q104. Or if you wanted to leave one and a half inches in the nut, it could be raised five and a half inches above the level? A. Yes.

Q105. And that was true also of these machines shown on the other blue prints, Exhibits U-3 and U-4? A. Yes.

Q106. Was that true of other machines sold to other customers about that same time? A. Yes, they were all made off that blue print and would be the same.

Q107. What change would be necessary to enable this device to raise more than six inches or five and a half inches? A.

Longer screws.

Q108. Any other change required? A. It would have to be raised higher from the floor or else let the screw go down through the sill plate. You probably could get two more inches without going through the sill plate by going to the bottom of the frame. By making the screw an inch and a half longer you would get an inch and a half more lift.

Q109. And could you use a screw one and a half inch longer without any change in the socket? A. You would have to continue the opening all the way to the sill plate.

Q110. If you made an opening in the sill plate, how long a screw could you use? A. You could make it any length.

Q111. What was the purpose of this adjustable "Fourdrinier" frame? What was that intended to do in the operation of the machine? A. Enable a paper maker to adjust the angle of the wire to suit the requirements of his stock and the speed of his machine.

Q112. And in what way would that enable him to meet the requirements of his stock and the speed? A. As I understand it, when they lower the table below the level it keeps the water back towards the wet end, and when they raise it above the level it carries the water ahead. On a fast running machine they want to carry the water along with the wire, and by having a convenient method of raising and lowering the table they can carry the water on the wire to any point they want. When the stock is free or slow, it makes it necessary to change this angle to suit. They also changed the angle to suit the speed.

Q113. In what way does that have a relation to speed? A. Well, when the machine is running fast, having the increased pitch, the water will flow freer and go with the wire. The faster the machine runs, the more pitch is required to carry the water forward fast enough by gravity

Q114. Was that the purpose you had in view in getting up this device? A. Well, that is my idea of the theory of it. Our purpose was to make what the paper makers wanted. We didn't know just what they wanted to do with it.

Q115. Well, did you find out that there was a demand for a device of this kind? A. Yes.

Q116. Was it possible with this mechanism to make the adjustment while the machine was running? A. Yes. That is, to a certain extent. We have improved the machine later to get any pitch while the machine is running.

Q117. What change have you made in that respect? A. In the apron board where it is connected to the mixing box. You can raise it twelve inches there while it is running, if neces-

sary.

Q118. Then what change have you made in reference to the length of the screws? A. We have devised different methods and practically abandoned the screw altogether.

Q119. What do you use in place of the screw? A. Well, we had so many different arrangements. We are using a worm and gear and drum with cable at the present time.

Q120. Have you ever seen any of these machines in operation in paper mills yourself? A. Yes.

Q121. More than once? A. Yes, I have seen a good many of them in my time.

Q122. And have you adjusted them or seen them adjusted by this device? A. Yes.

Q123. Why did you abandon the screw device? A. Principally on account of its becoming corroded so we couldn't work it.

Q124. Did you find difficulty of that kind? A. Yes.

Q125. What was generally the character of the material you used for these screws and bushings? A. We used brass.

Q126. Did you have difficulty when the brass was used for that purpose? A. Yes, it seemed to corrode.

Q127. Would it do that if it were adjusted frequently? A. No. If it were adjusted probably every day probably it would do all right, but sometimes they run them a week or a month without changing them and they would get filled up with pulp and they couldn't keep any lubrication on it on account of the water.

Q128. You found that difficulty? A. Yes.

Q129. Was there any other difficulty with a device of that kind or was that the only trouble you found? A. That was the only trouble.

Q130. In a machine such as is shown in the drawing of Patent 684,081, how far would the wire be pitched by the adjustment of the screw device that you have designated? How far would the pitch extend? A. You mean how long a distance down the machine?

Q131. Yes. A. That would depend on the length of the wire somewhat. Probably sixteen feet or an average of fourteen feet. The pitch would extend to what we call the guide roll. No, that is wrong. I thought you only meant the pitch of the frame. The shake frame don't run any further than the suction box as a rule, but the pitch runs clear over the suction boxes.

Q132. Then, as I understand you, by adjusting the breast roll end of the device by means of the screw mechanism, as

shown in your patent, you would raise the forward end of the wire and that would incline the wire from the breast roll to the guide roll. Is that what you mean? A. That is a little mixed right there and to explain all that I would have to go into the drawings.

Q133. Make any explanation you wish. We want to get it clear. Make an explanation of the way in which this device works and, as you have made a sketch, refer to the sketch and mark the different parts, such as the breast roll and the guide roll and then explain it with reference to that sketch. The question was how far down the pitch would extend in the wire. A. The pitch of the wire extends from the breast roll to the guide role. It may be in a straight line or it may be out of a straight line. The pitch of the wire over the suction boxes is permanent as we arrange it, and the pitch from the suction boxes to the breast roll is variable and may be adjusted by the lifting mechanism. With this arrangement the wire is always in contact with the suction boxes, regardless of the pitch of the table or shaking frame. The pitch of wire over the suction boxes depends upon the maximum amount of pitch required for the shaking frame so that the wire is never lifted off of the suction boxes. That is the way we build them.

Q134. How long have you continued to build them that way? When did you begin doing that? A. We always built them that way and still build them that way.

Q135. By what means do you get the permanent pitch over the suction boxes? A. That depends. We find out the maximum amount of pitch they want to carry the wire and set that to satisfy them.

Q136. How do you set the suction box? A. We raise the end next to the shaking end. We raise the end of the stationary rail where it connects to the shaking frame.

Q137. The earlier machines, did you raise that forward end of the permanent rail to correspond to the maximum pitch of the wire? A. I suppose we did. We couldn't run the machine unless we did. The earlier machines were all below the level line and in that case the stationary rail was set level because the pitch of the table was generally below the level instead of above, and it was not necessary to raise the stationary rail.

Q138. How early did you begin to raise the permanent rail carrying the suction boxes? A. As soon as they commenced to go above the line.

Q139. Do you know how much those permanent rails were raised? A. Well, in case they were going up six inches, they would have to block up there probably an inch or an inch and

a half.

Q140. How did you raise the forward end of the permanent rails in these earlier machines? A. Either put a blocking piece under there or make the frame to suit it.

Q141. Do you know which you did? A. In a repair shop we would put a filling piece under the rail.

Q142. Where would this filling piece be put? A. Usually on the shake post that supports the dead rail.

Q143. Will you designate that post in the patent by reference letter on figure one of the drawing? A. That is the post marked "A."

Q144. On figure one of your patent 684,081? A. Yes. If we were going to raise that up six inches, we would have to raise this rail up a half inch.

Q145. If you were going to raise up what six inches? A. The breast roll.

Q146. You would have to raise the rail that is marked "A" on this drawing a half inch? A. That is right there. That would be a permanent change.

Q147. And you are pointing to the top of standard post marked "a" in figure one of the patent 684,081? A. Yes, sir

Q148. You have made a sketch showing the wire, breast roll, couch roll, suction boxes and guide roll. Can you make a detail on that same sheet showing the posts, the end of the permanent rail and the end of the shaking rail and indicate the block which you say would be put under there? A. Well, of course, every different machine has a different pattern, but they are all practically the same as the picture shown in the patent. I can give you that.

Q149. Have you made a sketch of that kind illustrating what you have described? A. I have.

Q150. I will ask you to mark the first sketch you have made on this paper, figure No. 1 and the last sketch figure No. 2. A. I have marked it.

Q151. You just state what parts you have shown there and put a reference letter on the part that you have added. A. Sketch, figure 2, "a," represents a filling piece placed under dead rail marked "b," which carries suction boxes to give it the proper angle to enable the breast roll end to be elevated a considerable heighth.

Q152. Will you put the letter "c" on the post and "d" on the shake rail? A. I have done so.

Counsel for defendant offers the sketch produced by the witness to be marked for identification "Defendant's Exhibit U-5."

Q153. Do you show in the drawing of the patent a construc-

tion which permits of the use of a filling piece of the kind illustrated in this sketch? A. Yes. It is a common thing to fill in more or less under there to suit conditions. We used that as a sort of a leveling up place.

Q154. Well, was that the purpose of providing that construction? A. More for convenience of building it than anything else, I guess.

Q155. Calling your attention to the list of machines produced by you, have you had the dates of orders and dates of shipments supplied to that list? A. I have, yes.

Q156. Are those dates taken from your books? A. Yes.

Q157. Now, do I understand that all of these machines on this list are of this construction shown on the patent? A. The same construction.

Counsel for defendant offers the list referred to by the witness to be marked for identification, "Defendant's Exhibit U-6."

Q158. Assuming one of those machines such as furnished the Beloit Iron Works, as shown by the drawings, were permitted to stand for some time, do I understand that the parts would become rusty? Is that what you meant by corroded? A. No, they wouldn't rust, because they are made of brass. They would become dried up. The lubrication would be very rapidly dried up and the threads filled up with pulp and it would make them much harder to move.

Q159. Well, could they be moved? A. Yes, they do move. The only reason we abandoned that way of making them, we put the screws where they would be more accessible and easily oiled, and when the oil was put on it would stay on.

Q160. But a machine such as shown in the patent and in the Beloit blue print— A. With proper care, there would be no trouble in moving them.

Q161. Even after several years use? A. Oh, yes.

Q162. What line of machine does your company manufacture, that is, how extensive is it? A. We manufacture paper mill machinery and friction clutches. That is our principal business.

Q163. Do you manufacture all the machinery such as is ordinarily used in a paper mill? A. Yes, practically, outside of pulp mill machinery. We don't manufacture pulp mill machinery. We manufacture about everything used in a paper mill, used in making paper.

Q164. How many employees do you have in your company? A. About 250 to 300.

Q165. What is the amount of capital and surplus of your company? A. About $900,000.00 including surplus.

Q166. About $900,000.00 invested in the business? A. Yes.

A167. Have you a drawing giving the side elevation showing the Hammermill machine assembled? A. Yes.

Q168. Will you let me have one of those as an exhibit? A. Yes.

Q169. And have you a drawing of one of the machines showing the present adjusting device? A. Yes.

Q170. Will you let me have one of those? A. Yes.

Q171. Please look at the blue print which I now show you and state what that is. A. That is a "Fourdrinier" for the Hammermill Paper Company supplied in 1901.

Q172. That is the side elevation showing the assembled machine? A. Yes.

Q173. And is that the same machine of which Exhibit U-3 gives the detail? A. The same machine.

Q174. Those drawings go together for the same machine, do they? A. Yes.

Q175. And this drawing U-3 shows the adjusting screws for adjusting the breast roll end of that machine? A. Yes.

Q176. Now you have stated that if the breast roll end of a machine of this kind was raised more than a certain amount, you would then put some blocking under the permanent rail to adjust the suction boxes. Will you indicate on this drawing by the letter "x" the point or points where the blocking would be placed under the permanent rail. A. On this drawing, if I were going to do it, I would put them as I have indicated by the letter "x." I would require a quarter of an inch at the point which I have marked "x-1," half inch where I have marked "x-2" and another half inch at the point I have marked "x-3."

Q177. Do you mean at points "x-2" and "x-3" it would be a half inch in both cases? A. Yes, they would both be a half inch. Well, I guess I wouldn't put any filling at the point which I have marked "x-3," because I could get the adjustment on the tube rolls.

Q178. And as I understand you, you would not need to put any blocking at the point marked "x-3"? A. No.

Q179. How would you get any adjustment at that point, if desired? A. Well, it depends on how much you wanted to get, of course.

Q180. We will assume that you want six inches on the forward end of the wire, the breast roll. A. Well, you better start over again on a six inch adjustment. I would have to have more than that. If I got to go into an engineering proposition I ought to have a little time.

Q181. Give it in a general way. I am not asking for an

exact amount. A. These things have got to be laid down on a drawing. Just merely guessing at it, it is hard to say.

Q182. Just indicate the points where you would make any filling, and state, in a general way, how much you think you would have to put there, if you had a six inch adjustment at the forward end of the machine. A. Well, we will estimate this is on a level line. It may have all been raised up a little, but, assuming it is on a level line, if we wanted to go up six inches there, we would put a half inch at "x-1," one inch at "x-2," one inch at "x-3," or adjust the tube roll to suit without putting the piece at "x-3."

Q183. Is there any other place where you would put a filling in connection with that adjustment? A. It might be necessary to put a filler at "x-4" and "x-5." Well, to carry that idea out, we would have to put it at "x-6" and "x-7." What would be better and be less trouble, would be to raise the stand, put a filling piece underneath the stand.

Q184. Mark the point where you would put that. A. How will I mark that?

Q185. Mark it "Y." How much of a filling piece would you have to put there? A. About one inch.

Q186. And what would that do away with with reference to the filling pieces you have already mentioned? A. That would require about a half inch at "x-1" and it would not require to put any other filling piece.

Q187. Do you always use the stand, point "x-1" in these machines? A. Not always. Sometimes we only have the two supports at "x-2" and "Z."

Q188. Sometimes you support the permanent rails only at the ends? A. Yes, each end.

Q189. And if that were the construction, you want to put the filling piece only at point "Y"? A. Yes.

Q190. And you wouldn't need any of the others? A. No.

Q191. Now, would that make any change in the construction of the machine, putting that filling piece at point "Y"? A. No.

Counsel for defendant offers the drawing last produced by the witness to be marked for identification, "Defendant's Exhibit U-7."

Q192. Have you a blue print now showing the modified arrangement of the adjusting device you have referred to? A. This print shows our latest machine with the lift for raising and lowering the breast roll end and the whole "Fourdrinier" parts assembled.

Counsel for defendants offers the blue print last produced

by the witness to be marked for identification "Defendant's Exhibit U-8."

Q193. Will you please briefly state the difference between the adjusting device on this machine and on the original machine shown in the Hammermill and Beloit structures? A. In the Beloit and Hammermill structure, the table is raised and lowered by screws and worm gears, where in the latest machines it is raised with pulley blocks and worm gears.

Q194. Is that arrangement shown at the right hand end of this drawing? A. Yes.

Q195. And what does it consist of principally? You may mark the pulleys 1 and 2. A. It consists of pulleys 1 and 2, table three and worm gear, 4.

Q196. And what operates the worm gear? A. The crank, marked 5.

Q197. Put a number on the worm gear. A. 4 indicates both the worm and the worm gear.

Q198. Now how much elevation can be given to the machine as shown on this drawing at the breast roll end? A. This machine is arranged for about 8 inch movement.

Q199. What about the permanent rails, how are those arranged on this machine? A. The permanent rail on this machine has a pitch of two inches. It is 45 inches at the one end and 43 inches at the guide roll.

Q200. You mean an elevation of 45 at one end and 43 at the other? A. Yes, 43 at the guide roll.

Q201. How is that supported? A. That is bolted on supports similar to the Hammermill machine.

Q202. But the support is made higher? A. Yes.

Q203. Are there any other changes than what you have indicated in the adjusting device of this machine shown in the drawing marked "Defendant's Exhibit U-8"? A. The principal change in this design from the other design is that the extension supports are overhead or above the wire while in the other they are below the wire.

Q204. Now, so far as the operation is concerned, is there any difference between this machine and the Beloit and Hammermill machines? A. No, that is except in the details. You mean in the principle?

Q205. Yes, the principle of operation. That would be your answer? A. So far as the principle of operation is concerned, there is no difference.

CROSS EXAMINATION.

By Mr. Lyman:

XQ206. Do I understand that this Exhibit R represents ex-

actly the construction of the adjusting mechanism on the Kimberly machine that you put in for the Beloit Iron Works? A. Yes, sir.

XQ207. And the details of that machine were precisely as shown in Defendant's Exhibit U-1? A. Yes.

XQ208. Now how much of a bearing ought that adjusting screw to have for really safe operation? A. I don't know. When we designed that machine, in designing the machine, we would say it ought not to have less than three inches, yet I haven't any doubt that it would work if it only had one inch. It would answer the purpose, I mean.

XQ209. And a three inch bearing was, however, contemplated for it? A. Yes.

XQ210. That bearing is in the nut which is shown at the right hand upper corner of the drawing No. 7 on Exhibit U-2? A. Yes.

XQ211. Now, as I understand it, that nut is fitted into the bore in the worm gear which is shown just at the left on drawing No. 7. Is that right? A. Yes.

XQ212. And the collar against which I mark the letter "a" rests down upon the top of the worm gear at the point which I mark letter "b." A. It rests on the top of the stand. It rests on here (indicating). The worm gear is under there (indicating). That worm gear goes on there and that is the bearing from there to there (indicating). This nut goes through this piece (indicating). The nut rests on here (indicating). That goes in that place there (indicating). This is the support for the nut (indicating). I can make a sketch which will show that whole thing if you want me to.

XQ213. Where then is the bearing space in the nut? A. There is a thread all the way through that nut and the screw raises up out of the nut.

XQ214. Then, as the parts were designed to be operated, how near the top of this nut would the bottom of the screw come? A. I would say that we designed it to come about three inches from the top.

XQ215. About the point where the line is drawn with the word "turn" over it? A. Yes.

XQ216. Is that the word "turn"? A. It looks like it.

XQ217. Will you explain, please, how you arrived at the figure 5½ as the possible upward adjustment in your previous testimony? A. This sketch I have drawn shows the construction of the screw and nut, the nut being 6¾ inches long in the threaded part and the screw 9⅝ inches long in the threaded part. Allowing 2 inches of your screw for the lowering below

the level line leaves 7⅝ inches of the screw for elevating. Now, supposing the nut to be 6¾ inches long, the screw might be lifted 6 inches, leaving 1¾ inches in the nut.

XQ218. I don't quite see how you get that last figure. A. That is within an eighth of an inch of it.

XQ219. Will you just explain it on the record. A. To be exact, it is 1⅝ inches in the nut.

XQ220. Referring to Exhibit R, does this figure which I marked "Fig. 1," show the wire in its level position? A. Yes.

XQ221. How much of the screw is projecting above the nut in that drawing? A. About 2 inches.

XQ222. Please measure it and say exactly. A. It is about 2 inches. There might be 2½ inches in there.

XQ223. Now, referring to the nut as shown on drawing No. 7, at the right hand upper corner in Defendant's Exhibit U-1, there is a counter bore at the top of a half inch in depth, is there not? A. Yes. It is marked there, "½ inch counter bore."

XQ224. And that would reduce the available bearing in the nut by one-half inch, would it not? A. Yes. That would reduce the 1⅝ inches that I gave you there to 1⅛ inches, although that would only be to the top of the thread probably. Probably the thread is just bored out. Of course, it would remove that much of the thread, as far as the supporting weight goes.

Defendant's counsel requests that the sketch made by the witness be marked for identification, "Defendant's Exhibit U-9."

By Mr. Lyman:

XQ225. Then, in order to leave the adjusting screw with a bearing of as much as 3 inches in the nut, its bottom would have to be at least 3½ inches below the top of the collar of the nut? A. Yes.

XQ226. Now, in the drawing, Exhibit R, which I have marked "Fig. 1," how far below the bottom of the nut is the bottom of the screw? A. According to these figures it ought to be 6¾ inches. This is 9⅝ inches. It ought to be about ⅞ of an inch, according to the detail.

XQ227. But according to Exhibit R it is ⅝ of an inch? A. Yes, sir.

XQ228. That would mean then that the screw would be raised above the position in which it is shown in this "Fig. 1" of Exhibit R, ⅝ inches plus 3¼ inches, that is to say 3⅞ inches and still leave it with a bearing of 3 inches? A. In the thread, yes, sir.

XQ229. That would be the utmost extent to which the screw could be raised and still leave it with a bearing of 3 inches that

was contemplated? A. Yes.

XQ230. This screw supports the whole Fourdrinier end of the machine, does it not? A. Yes.

XQ231. And the Fourdrinier end of the machine is subject to violent shaking action. A. There is no movement to this part of the machine. That is all taken on the straps that hold it up.

XQ232. The shake? A. Yes, sir.

XQ233. Would it not be better practice to leave more than 3 inch bearing? A. Yes. It might be. It is a question whether it would be better to have really more than is actually required on account of the corroding effect that I spoke about.

XQ234. Well, wouldn't it be safer to have 4 or 5 inches rather than 3 inches bearing? A. I don't think it would be any safer if 3 inches were enough to carry the load. It wouldn't be any advantage in having anything more than that.

XQ235. Well, is 3 inches enough to carry the load under the conditions of operation of the machine? A. We never heard of any complaint.

XQ236. Do you know that your paper makers who have used this have not used more than 3 inches? Haven't they used more than 3 inches ordinarily? A. Yes, they have for a lower pitch, they would have more than 3 inches.

XQ237. Is it your judgment, as a machine maker, that 3 inches would be enough under all circumstances, or would it be better to have more than 3 inches bearing? A. I think 3 inches would be enough under any conditions on a machine 130 inches wide. If a machine is going to be 200 inches wide, I would say give it more.

XQ238. How wide were the machines for Kimberly, do you remember? A. About 132 inches, I think.

XQ239. How about 3 inches for that kind of a machine? A. Well, I wouldn't recommend going much less than that. It is a good deal like buying an automobile that will go 50 miles an hour and runs 75.

XQ240. Did you actually see these installations at Kimberly? A. No.

XQ241. Did you have anything to do personally with the construction of them? A. No, I don't know anything about them.

XQ242. The Bagley & Sewall Company, I understand, supplied to the Kimberly mill one of these machines on which they had your form of suspension, in the year 1909 or 1910. Would you have a drawing for that adjustment? A. Yes.

XQ243. Would you let us see that, please? A. That is the Bagley & Sewall machine (producing drawing). This was

made to run 6 inches above the 41 and one inch below the 41.

XQ244. Is that an assembly drawing you have there? A. Yes. It is different from our regular standard. They wanted the breast roll on the outside.

XQ245. Did you say it was changed to run this way? A. I say it was built that way.

XQ246. That is noted on the drawing? A. On the blue print.

XQ247. Why did that happen to be noted on the blue print? A. Well, it was something special. Most of these machine builders specify something a little different than the others, and as it was different from our general standard we generally noted it, and in erecting the machine we would follow out their instructions.

XQ248. That would mean that there was a greater adjustment provided on that machine than provided on the two earlier machines? A. Yes.

XQ249. That confirms the view that there was not as much of an adjustment as 6 inches above the level provided, doesn't it? A. Yes, as far as we were concerned.

XQ250. Now this blue print of drawing No. 3, showing the subject, "Detail of vertical adjustment for style No. 2 Fourdrinier," being one of the detail blue prints of the adjustment which you put in on the Bagley & Sewall machine in 1909 for the Kimbley Clark Company, shows a different length of adjustment screw, does it not? A. Yes.

XQ251. It shows an adjustment screw 20 inches long? A. Yes.

XQ252. And a screw threaded 13⅛ inches long? A. Yes.

XQ253. That is to say the screw threaded portion of this adjustment on this Bagley & Sewall machine was 3½ inches longer than on the screw provided on the two Beloit machines as to which you have produced the drawings before? A. Yes.

XQ254. And that machine with the adjustment above the level contemplated on this Bagley & Sewall machine in 1909, was 3½ inches greater than contemplated on the Beloit machines of 1904. A. Yes.

XQ255. And the adjustment above the level contemplated upon this Bagley & Sewall machine of 1909, was 6 inches? A. Yes, sir.

XQ256. This note upon the blue print for the Bagley & Sewall machine says, "Can be adjusted to run 6 inches above 41 inches or 1 inch below 41 inches." That means, I suppose, that 41 inches was the breast roll heighth on which the wire would be running on a level? A. Yes.

XQ257. Now, may I see the prints for the breast roll adjustment which is put on for the Beloit Iron Works in a machine which they put in for Kimberly in 1912? A. Yes, I produce them.

XQ258. These drawings for the Beloit machine which were supplied to the Kimberly Company in 1912 show an adjustment screw 20 inches long with a threaded portion 13⅛ inches long like those of the adjustment mechanism which was put in in 1909 for the Bagley & Sewall machine at Kimberly mills, do they not? A. Yes, practically the same thing.

XQ259. The order for this 1912 Beloit machine expressly requires, does it not, that "The screws must allow 6 inch pitch"? A. Yes.

XQ260. Now, do you remember whether at the time this Bagley and Sewall machine was put in at the Kimberly plant in 1909, new screws were provided for use on the two machines that had been previously there, that is the two Beloit machines for which you had provided an adjusting mechanism in 1904? A. I don't remember anything about that.

XQ261. You don't remember whether they were or not? A. No.

XQ262. But, in view of this difference between the drawings, it seems probable, does it not, that if these machines have an adjustment allowing the breast roll to be elevated 6 inches above the level, I mean the first two Beloit machines, the screw must have been changed at some time or other on these machines from the screw which was originally put in there by you. A. I doubt whether they were or not. I doubt whether they would go to the trouble of changing them.

XQ263. You don't know whether that was done or not? A. No.

XQ264. Would you have any record if you made any new screws for the Kimberly people about this time to be used on these two Beloit machines? A. Yes, we would have the record for that.

XQ265. Can you find out whether there are such records? A. Yes. Who would be likely to order them?

XQ266. Well, of course, I don't know whether the Kimberly Company or the Beloit Company. I should think one or the other of them would be likely to order them. A. When would they be likely to order them?

XQ267. I don't know, but you might search along there any time from 1908 or 1909, or you might see if you made any higher stand for them or anything in that time. A. They didn't get anything from us of that kind.

Q268. At any time? A. No, not in 1908 or 1909. Nobody seems to know anything about it.

XQ269. Have you looked at your account with them to find out? A. Yes, we looked at the index of their orders. We have an index for all their orders.

XQ270. Did you look at the Kimberly-Clark Company and the Beloit Company also? A. Yes, both of them.

XQ271. In the order for this Beloit machine that was put in for Kimberly Company in 1912, I find two sets of vertical adjustment screws of two each called for. Do you need two sets for one machine? A. Yes, there is a middle support there.

XQ272. And was there a middle support on the frame of the Beloit machines that were put in in 1904? A. I don't know. It depends on the length of the wire. If they were especially long, we put a center support in. If they were not so long, we only put the one at the ends. Have you got the drawing for 1914?

XQ273. We have the order here. A. The print, of course, will show it. (Print examined.) There probably was. Let me see the detail card. (Examined card.) Here it says four brass vertical adjusting screws.

By Mr. Paul:

XQ274. Does that mean four for one machine or four for the two machines? A. Four for each machine.

XQ275. And that detail shows four? A. Yes.

By Mr. Lyman:

XQ276. Now, this blue print, Exhibit R, does not show the forward end of the suction boxes blocked up above the level of the guide roll, does it? A. No, we very seldom show it on our drawings. We generally work to a level line there.

XQ277. You don't know whether that was blocked up as that machine was installed or not? A. No.

XQ278. On the blue print of the Bagley-Sewall machines that were put in for Kimberly in 1909, the forward end of the suction boxes is shown raised a little over an inch above the level of the guide roll, is it not? A. Yes, that is 40¾ inches about and this is 42 1/16 inches. That is about an inch. This shows a drop. It shows all the way down to 1 inch below the level. Whether this is level or not, I don't know. This drawing shows the breast roll all the way down in this case.

XQ279. Well, is there any way you can tell whether the forward end of the suction box section of this 1904 machine had the permanent incline of 1 inch or so? A. I don't know anything about that back. We never know anything about the permanent rail when we supply to builders.

Counsel for plaintiff asks to have marked for identification the blue print order and details of the Bagley & Sewall 1909 machine for which the adjusting mechanism was supplied by the Moore & White Company, and to the Kimberly-Clark Company, this being marked "Plaintiff's Exhibit 1909, Kimberly machine," and he also asks to have marked for identification the blue print, drawings and order for the Beloit machine supplied to the Kimberly-Clark Company in 1912, for which the adjusting mechanism was supplied by the Moore & White Company, this being marked "Plaintiff's Exhibit 1912, Kimberly machine."

Counsel for defendant objects to the offer on behalf of the plaintiff of these drawings, as they are produced by the defendant's witness, and defendant's counsel intends to offer them in behalf of the defendant.

By Mr. Lyman:

XQ280. Is there any method of raising the suction boxes in these Beloit 1904 machines, as shown in Defendant's Exhibit R, other than what you have described by blocking under the posts supporting the suction box section, or filling on top of that post between it and the rail? A. I don't know how they built them. We built them with an adjustment. You get more or less of an adjustment there. I don't know how Beloit builds them.

XQ281. How much can you raise the breast roll of a Fourdrinier machine without elevating the suction boxes at all, leaving them level? A. Well, a wire 60 feet long, I suppose you could go 2 inches. The wire would settle that much.

XQ282. With a wire of less length, you couldn't go as much as 2 inches? A. No.

XQ283. And with a wire 70 feet long, how would it go? A. It might go 3 inches. I wouldn't like to say.

XQ284. Does the dandy roll help keep the wire down on the suction boxes? A. Yes, it would hold it down considerable.

XQ285. The dandy roll rests loosely on its bearings? A. Not always. Sometimes it is supported. Very often it rests right on the roll.

XQ286. But it isn't held down? A. No.

XQ287. It is just the matter of its weight then, whatever effect that may have? A. Yes.

XQ288. It is not a very heavy roll, is it? A. No.

XQ289. And does the dandy roll in the operation of the machine have to be lifted off the wire from time to time? A. Yes.

XQ290. Now, as I understand it, the machine that you

made for the Hammermill Company was identical in every way with these machines that you made for the Kimberly people in 1904, so far as the adjustment of the breast roll was concerned? A. So far as I know.

XQ291. They had just as much of an adjustment and no more? A. They were the same.

XQ292. And, in the light of these further drawings of the 1909 machine, for which you installed the adjusting mechanism at Kimberly, would you say that the adjustment contemplated above the level on these machines was about 2½ inches- A. I would say 2½ to 3 inches, would be about what was contemplated.

XQ293. Now, how much below the level was contemplated? A. 2 inches.

XQ294. At what speed was the Hammermill machine designed to run? A. About three or four hundred feet.

XQ295. Can you give that exactly? A. No.

XQ296. Wouldn't it show in the specifications for the machine? A. No. Well, the drives might show that. I guess if we were to figure out the shafting from the drawing we could tell.

XQ297. Can you have it figured out? A. Yes. But it is quite a little job. That was 400 feet.

XQ298. You have presented a list of companies to whom you supplied machines having, as I understand you to say, adjustments like those shown in Exhibit R. Now, that adjustment was covered by a patent applied for by you in 1899, The Moore & White Patent No. 684,081, was it not? A. Yes.

XQ299. Well, now, when you applied for that patent, you had to make oath that the structure shown in it had not been in practical use for more than two years prior to the date of the filing of the application. The application was filed on December 8th, 1899, yet your list includes three machines which were installed before December 3, 1897. In view of that fact, are you not in error in saying that the mechanism supplied to some of these companies was that shown in that blue print, Exhibit R? A. I couldn't say. I didn't make out that list. I couldn't answer that question.

XQ300. You don't know then, of your own knowledge, that these installations of machines supplied to the companies on that list did have the adjusting mechanism like that shown on Exhibit R? A. I presume they are correct. I didn't look it over myself. Which ones do you refer to?

XQ301. Anyone. A. You say we didn't make our application until two years after these were supplied?

XQ302. The point is whether you know of your own personal knowledge that the adjusting mechanism supplied to those various companies given on your list was like that of Exhibit R? A. I imagine it was.

XQ303. Well, I am asking for your personal knowledge. A. Personally I don't know. I don't think we made anything else. How much discrepancy is there in the dates?

XQ304. The first one referred to on this list was shipped February 15, 1896. That would be very nearly four years before the date of the application for the patent. A. Well, we had another patent before this one that you referred to.

XQ305. Were some of these machines on your list provided with the mechanism shown in the other patent? A. There might be two or three of them.

XQ306. That other patent showed an adjustment by means of an eccentric bolt? A. Yes, the first patent.

XQ307. That showed an adjustment primarily below the level? A. I think so, yes.

XQ308. And very slightly, if at all, above the level? A. Yes, it did. Not very much adjustment either way.

XQ309. Well, did it adjust at all above the level with that eccentric? A. Well, I will have to look that up. Who is the earliest date there?

XQ310. That is the machine to W. C. Hamilton & Sons, shipped February 15, 1896. A. I just looked up the Hamilton. I didn't have time to look up the others. I find a mistake there in the dates. We supplied four of them to W. C. Hamilton & Sons in 1895 and 1896, that were built from the original patent with the eccentric lift and, in 1910, we built them another one from this Exhibit R patent. I had Mr. Kern make out this list and I suppose he just put down the first date he came to, and it slipped his memory in regard to the Hamilton machine and Mr. Hibbs put the date on today and put the first dates he came to.

XQ311. What I asked you was whether the machines made in accordance with that patent with the eccentric lift had any possibility of adjustment above the level at all? A. That order of this date here is the first machine that was built, an experimental machine and had that eccentric piece on and we don't seem to have any complete drawing for it. In fact, it has been rebuilt since and we only had an adjustment there of 9/16 of an inch. I don't know whether it was above or below.

XQ312. Well, isn't it a fact that the adjustment which was contemplated in that eccentric bolt patent was from below level and up to level and not above level? A. It might have been.

XQ313. That is what you contemplated in that patent, isn't

it? A. I remember in early days they never went above the level. That probably would all be below the level.

XQ314. It was the usual practice, on book papers up to 1906, to run the wire uphill, was it not? A. I don't remember when they commenced to go above the level.

XQ315. Do they now run book papers with the wire running down hill? A. I suppose they do.

XQ316. Do you remember when that change took place? A. No.

XQ317. Now, all of these concerns that are named on your list that you have put in evidence are book paper manufacturers, are they not? A. No, the Jessup & Moore Paper Company, which was the Singerly Paper Company, made newspapers.

XQ318. Are they the only ones on this list? A. The Cherry River Paper Company make wrapping paper. They run their machine 400 feet a minute. Hammermill Paper Company makes bond paper now at 400 feet a minute. I couldn't say what the others make.

XQ319. Well, with those exceptions, all these names on this list were book paper manufacturers? A. They did make book paper, but whether they make anything else or not, I don't know.

XQ320. Still these machines in general were designed to run not over 300 feet a minute, were they not? A. Some of them.

XQ321. Were there any on that list that were designed to run at a higher rate of speed than 300 feet a minute? A. The Cherry River ran 450 feet. The Hammermill, they have been running 400 feet and 450 feet, and we are changing the drive to run 500 feet now.

(No XQ322.)

XQ323. With the machines as originally constructed, were there any other besides the Cherry River Paper Company and the Hammermill that were constructed to run more than 300 feet a minute? A. I don't know about New York & Penna. Company. Dill & Collins was one intended to run about 200 feet, W. C. Hamilton & Sons, about 200 feet, Merrimac Paper Company was about 200 feet, and the others I don't know anything about.

XQ324. But, in general, they were all slow machines as compared with news machines? A. They were not news machines.

XQ325. Well, they were slow machines as compared with news machines? A. Well, I don't consider them very slow.

XQ326. Still, as compared with news machines, you don't expect these machines which are on your list to run anything

like as fast as news machines, they were not built for fast machines? A. No, they were not built for fast running. They were built to run about 450 feet. That was the limit we expected them to run.

XQ327. Most of them were to go a great deal less than that? A. Yes, but you must build them to run. I don't know just how you mean, but any machine we build can be run up to 450 feet.

XQ328. Yes, but I mean they were built for book paper or other paper which require slow speed. A. When they were ordered, yes. If they were not built to run that high though, it would ruin our reputation. One machine we build to run as good as another. We are not supposed to know how fast they are running.

XQ329. Now, what was the reason for making your breast roll adjustable from a position below the level to a position above the level? A. The demand of the trade.

XQ330. Well, it was designed to take care of the different grades of stock regarding the drainage, was it? A. I don't know. It was to facilitate making paper. That is all I know.

XQ331. You don't know what the reason for this adjustment was? A. As I understand it, they wanted to carry the water nearer the suction boxes, that was the reason for lifting the wire.

XQ332. That is, when the wire was lifted above the breast roll is when they were working with quick stock and wanted to carry the water further down the wire than otherwise it would go? A. I mean with any stock.

XQ333. With slower stock they would use an uphill pitch, that is they would lower the breast roll below the level? A. Yes.

XQ334. And with a quicker stock they might run their stock down hill with the breast roll a little above level? A. Yes.

XQ335. It was purely a question of drainage, getting the drainage on the stock and getting the water on the wire? A. I think the question of speed would enter into it.

XQ336. Now, in just what way would the question of speed enter into it when you were running the wire with the breast roll on the level? A. I don't consider myself a paper maker expert. The faster the wire was running the nearer level the wire would have to be to carry the water along.

XQ337. Well, wouldn't it be just the opposite of that, that the faster the wire was running the further the water would be carried down the wire by the wire naturally, when the breast

roll was at a point below the level? A. I don't know what the action would be there.

XQ338. Do you mean that you are not paper maker enough to know what the theory or purpose of this adjustment was? A. I guess that is about right.

XQ339. Is the same true with Mr. Moore who joined in with you for the application of these patents? A. I guess he knew about as much as I did.

XQ340. So far as you know, it may be that with your breast roll below level, the faster the speed of the wire the lower below the level the breast roll ought to be? A. I wouldn't like to express an opinion.

XQ341. And your position on that relates to both the adjustments above the level and adjustments below the level? A. I feel a little different about above the level. I think there might be a difference in the action above the level than blow the level in regard to speed.

XQ342. You don't purport to be an authority on that subject? A. No.

XQ343. Now, as I understand it, all the machines which you are now building have the suction box section blocked up so that the suction boxes participate in the pitch of the wire. Is that correct? A. That depends a little on the specification. Most every mill superintendent when we take an order for a machine, specifies just how he wants that made and we make it. I might answer that a little more intelligently if you will allow me to consult our drawing room, because I am not really acquainted with all the little details of just what we are doing.

XQ344. Is it true that most of the machines that you are supplying now are provided with a substantial pitch to the wire, that is a substantial elevation of the breast roll above the level? A. That is provided. They can get it if they want it.

XQ345. Can you tell me the date when you put in the first machine that you ever put in that had a substantial possibility of the elevation of the breast roll above the level? If you cannot give that from memory, you may look it up. A. The first machine we built was for Dill & Collins. I can get the date of that.

XQ346. Will you find out that date, please? A. Now, this seems to be the first machine that we built with the incline dead rail. That was built for the West Virginia Paper Company 1912 (blue print produced).

XQ347. That is the first one you ever built that had any substantial pitch to the breast roll? A. This had a 6 inch lift.

XQ348. That is the first one you ever built that had as much

as 6 inch pitch to the wire? A. Yes, designed for it.

XQ349. Is that a news machine? A. It is a book machine.

XQ350. And in order to get that much possibility of adjustment you provided a radically different form of adjusting mechanism from what had been used in connection with these machines that you have been previously testifying to, such as shown in Exhibit R? A. Yes, it was more convenient to get the greater adjustment this way and, at the same time, it got rid of the mechanism underneath with the water running on it all the time. This screw piece is in here (indicating on blue print) enclosed in a casing.

XQ351. You spoke about a Dill & Collins machine a moment ago which you thought was the first? A. I thought it was, but I find this West Virginia machine was the first.

XQ352. When was the Dill & Collins machine? A. It didn't have this connection. They didn't want the incline pitch.

XQ353. Did you have any adjustment at all? A. Oh, yes, it would go up 3 or 4 inches and down, about 6 inch movement altogether.

XQ354. 3 or 4 inches above the level and a couple of inches below the level? A. Yes.

XQ355. As I understand it, you have since this West Virginia machine was put in, installed other machines constructed on this principle, and all adapted to give pitches of 6 inches or more? A. Yes.

XQ356. Up to 12 inches? A. Yes.

XQ357. There was one point I wish to get straight on the record. When you were speaking of the machines put in for Beloit and Kimberly, constructed in accordance with Exhibit R, you said the pitch of the wire would extend about 14 feet down the wire and then, as I understand it, you corrected yourself and said it would extend to the guide roll. A. To the guide roll, yes.

XQ358. In all these machines in which you have put in substantial pitches, you make the apron boards adjustable with the breast rolls, do you not? A. Yes, that is right.

XQ359. And the first one in which you made that arrangement was this West Virginia machine? A. No, we have been making them all that way for a long time.

XQ360. You don't know when you made the first one? A. Oh, we did this always.

XQ361. Now, you have had an investigation of your records made and found that you have not sold anything to Kimberly-Clark Company or the Beloit Iron Works for use at Kimberly since 1904 except these machines you have already testified to?

A. Yes.

XQ362. I understand you are not in a position to vouch for any of these names or dates on the list of machines which you presented and which has been marked "Defendant's Exhibit U-6." Is that correct? A. Well, I don't like to go back on this man's work, but I think with about three corrections here, this would be correct.

XQ363. Well, have you personal knowledge of that? Do you wish to stand behind that list? A. Well, I do. If you want this list I will make it right. I think there are three or four here which he has taken as the first one built. I know that after the date of my patent application for patent 684,081, we used the construction for the machines shown on the list.

XQ364. That purports to be a complete list up until 1906, I believe? A. Oh, no, it is not a complete list.

XQ365. Who made the list out? A. Mr. Kern. He just did it in an off-hand way, you know. Mr. Paul wrote here to know whether we had supplied any of these machines prior to 1906.

By Mr. Paul:

XQ366. I thought you gave it to me complete? A. Well, it might be, prior to 1906.

It is stipulated that this witness may personally make corrected list of the machines having the construction shown in Exhibit R, shipped by him prior to the year 1906, with the dates when ordered and shipped, and the same may be given to the Notary and substituted for the Defendant's Exhibit U-6, copies to be sent to each counsel.

By Mr. Lyman:

XQ367. Can you name any instances prior to 1906 where the suction box section on your machine was permanently inclined? A. No.

XQ368. Referring to the sketch which you made, which is called "Defendant's Exhibit U-5," isn't the rail, "d," which carries the wet end of the wire pivoted on column "c"? A. Yes.

XQ369. So that it could not be raised at its junction with the rail "d"? A. The two pieces together would have to be raised. They are all contained in one piece.

XQ370. That is you could raise both of these rails "b" and "d" by putting a block in under the column which supports them both? A. Yes.

XQ371. But it would not be practical to lift "b" by filling as indicated by you on this sketch and yet leave the "d" as indicated on this sketch? A. No, not to any extent. Not over half an inch.

XQ372. How much of an adjustment could you make on the table rolls carried by "b"? A. Probably ¾ of an inch.

XQ373. You don't know whether there was any filling piece put in at Kimberly? A. I do not. A better plan, if you needed more than a half inch would be to put a plate under the stand.

XQ374. Which patent did this man Hamilton own? A. Both of them.

XQ375. Have you an assembly of this Kimberly, Beloit machine of 1904? A. No.

XQ376. In your patent 684081, the suction boxes are shown stationary, are they not? A. Yes.

XQ377. When the wire is running up-hill the better the speed of the wire the less time the stock has to drain, that is true, isn't it? A. When it is running up-hill, from the time it leaves the breast roll to the suction boxes, the stock is on there, the faster it runs the less time the stock has to drain, did you say?

XQ378. Yes. A. Yes.

XQ379. And therefore, the deeper the pool you require under breast roll end. That follows, does it not? A. If you want to keep the water filled up, you would have to keep it deeper.

XQ380. Yes, and that means then that when you are running up-hill the faster your wire goes the lower your breast roll ought to be, isn't that true? A. I don't know. That is too much for me.

XQ381. That is you don't know? A. I don't know. When that sheet forms on that wire it is pretty hard to tell what happens.

XQ382. What is the pitch that they have on that Hammermill machine at the present time? A. I don't know.

XQ383. Do you know whether they have blocking underneath the breast roll end of the machine? A. No, I do not.

XQ384. Do you know whether they have blocking underneath the breast roll on the Friend machine at the present time? A. No, I do not.

XQ385. Your company is primarily a manufacturer of book paper machines rather than news machines, is it not? A. Yes, that is we happened to get orders for book machines and we are unable to get orders for news machines. It just happened that all of our orders were for book machines.

XQ386. Do you remember when you first heard of the Eibel patent? A. I don't recall, no.

XQ387. About the time it came out? A. I suppose so. When anything new turns up I keep in touch. I remember the Eibel patent several years ago. I didn't know anything about

it.

XQ388. How did you happen to run across it, do you know? A. I don't know. I seen some account of it in the Paper Trade Journal.

XQ389. Was it generally looked upon as a striking thing, the Eibel idea? A. Well, do you want my private opinion of it?

XQ390. I am asking what the general view of the art was. A. As far as I can remember, it seems to be somewhat of a departure from the thing that was being used. At the same time, we couldn't see that it was anything different in principle from what was being used.

XQ391. It attracted a good deal of notice? A. There seemed to be a good deal of talk about it. That is our version of the thing here.

RE-DIRECT EXAMINATION.

By Mr. Paul:

RDQ392. You do not intend by your testimony on cross examination to make any change in the testimony you gave in direct examination as to the capacity or capability of the first Beloit machine for adjustment above the level? A. No.

RDQ393. You see no reason to change your testimony as to the amount that that machine could be adjusted above the level? A. No.

RDQ394. And the other machines of like construction. Is that right? A. Yes.

RDQ395. Now, you have been asked if the first machines that you put in had a substantial pitch. What limit of pitch had you understood counsel to inquire about when he referred to a substantial pitch? A. Well, the machines that have been referred to here by these prints were designed for a pitch anywhere from 2 to 4 inches, 3 inches would probably be about the average. They were supposed to be adjusted from 2 to 4 inches. That is they could go 4 inches without any difficulty. If they wanted to strain a couple inches more, by a little tinkering in the mill, they could do it. I would call 6 inches a substantial pitch. I would call 4 inches a substantial pitch, but, as machines are being built at present, they are built with the idea that 6 inches is a substantial pitch, rather a medium, where they could go less or more if they wanted it, without very much alterations in the machine.

RDQ396. And if you considered 4 inches a substantial pitch, the machine drawings which you produced here on cross examination of the West Virginia Paper Company machine, would not be the first one that you made with a substantial pitch, would

it? A. I wouldn't think so.

RDQ397. What tinkering do you think would be required at the mill to make the machine like Exhibit R, the first Beloit machine, adjustable to 6 inches? A. Block it up and put plates under the column, under these stands, if you want to do it.

RDQ398. To what extent do you think it was practical to adjust these machines above the level by means of the screw devices which were furnished? A. As I said before, from our standard here, we would say 4 inches ought to be about the limit, but from my experience with paper mill men, I would not be surprised if they went 6 inches and took all chances.

RDQ399. 6 inches as then constructed? A. Yes, taking chances of their breaking down some time for them.

RDQ400. Now, what change would be required to make those go 6 inches? A. Well, off hand, I would say they would have to block up that column that carries the permanent rail at least an inch. They might have to adjust the save-alls an inch or two to make them clear the wire; outside of that I don't think of anything.

RDQ401. What about the length of the screws, would you change them any? A. Well, I am taking it for granted that they are taking a chance on the screw.

RQD402. And if you didn't change the screw any, you would only need to adjust the save-alls and block up on the column? A. Yes. If we went 6 inches we would have to raise the save-alls a couple inches.

RDQ403. What change was there between the first Beloit machine and the machine you sold Bagley & Sewall Company for Kimberly & Clark? Was there any change except in the length of the screw? A. There was a different breast roll frame designed to carry the breast roll outside instead of inside, to suit their requirements.

RDQ404. But, as far as the adjusting device was concerned, the screw was the only change? A. Yes

RE-CROSS EXAMINATION.

By Mr. Lyman:

RXQ405. Would you think it would be feasible to run one of these machines like Exhibit R that had a 9⅝ inch screw thread with only 1⅝ inch inside the nut? A. As those screws are 2½ inches in diameter, and there are four of them to carry the load, I think 1½ inches of the thread would support the load.

RXQ406. You take into account the strain of the wire and the other strains? A. Just the dead load there, the weight.

RXQ407. Isn't there a pull of the wire? A. No. The pull of the wire is in itself. There is no pull comes on these screws.

Counsel for defendant offers the file and drawings produced by the witness of the machine furnished Bagley & Sewall for Kimberly & Clark Company in 1909, to be marked "Defendant's Exhibit U-10," the same having already been marked "Plaintiff's Exhibit 1909, Kimberly machine," and also offers in evidence the print, file and drawings of the machine furnished the Beloit Iron Works for Kimberly Clark Company in 1912, to be marked "Defendant's Exhibit U-11," the same having already been marked, "Plaintiff's Exhibit, 1912, Kimberly machine."

It is agreed between counsel that the signing and certification of the foregoing deposition is waived.

DISTRICT COURT OF THE UNITED STATES,
DISTRICT OF MAINE.

EIBEL PROCESS COMPANY, Plaintiff,
vs.
MINNESOTA & ONTARIO POWER COMPANY, Defendant.
} In Equity, No. 769.

Deposition taken on behalf of the defendant in the above entitled cause before Frederick M. Boyer, notary public, commencing on Thursday, Nov. 22nd, 1917, at 1:30 p. m., at the office of Frederick M. Boyer, 121 Washington street, Watertown, N Y., pursuant to the stipulation and agreement of counsel.

Appearances: On behalf of plaintiff, Mr. Harrison F. Lyman. On behalf of defendant, Mr. A. C. Paul.

And thereupon the following proceedings were had.

HARRY E. ROCKWOOD,

sworn on behalf of the defendant:

By Mr. Paul:

Q1. What is your name? A. Harry E. Rockwood.
Q2. Where do you reside, Mr. Rockwood? A. Carthage.
Q3. Carthage, N. Y.? A. Carthage, N. Y.
Q4. How far is that from Watertown? A. Twenty miles.

Q5. What is your age? A. Forty-three.

Q6. What is your present occupation? A. Paper mill superintendent.

Q7. Of what mill are you superintendent? A. The Champion Paper Co., at Carthage.

Q8. What kind of paper is made principally by the Champion Paper Co.? A. News paper.

Q9. What type of machine does it employ? A. Fourdrinier. Rice & Barton, straight Fourdrinier machine.

Q10. When were you first employed in the mill of the Champion Paper Co.? A. In March, 1904.

Q11. Have you been there all the time since that date? A. No, I have been away from there three times since then.

Q12. About when were the dates that you were away? A. As near as I can remember I went to Berlin in July, 1904, and in October the same year I came back to the Champion again. I worked until 1908 and was away from the mill about one year and came back in 1909, to the Champion again, and in 1910, I was promoted to the superintendency. Before that, previous to that, I had run a machine. In August, 1912, I went to the Pettibone Paper Co. mill and came back in February, 1913.

Q13. Then you have been at the Champion mill since March, 1904, with the exception of the times that you have specified that you were away? A. Yes, sir.

Q14. What was your work up to the time that you were promoted to superintendent? A. I was machine tender; I run the machine.

Q15. Have you been superintendent all of the time since you were promoted to that position? A. Yes, sir.

Q16. What is the size of this Fourdrinier machine that you have in your mill? A. Called 132 inch Fourdrinier.

Q17. That means the width of the wire? A. The width of the wire was 132, and I increased it one inch, making it 133.

Q18. What is the length of the wire? A. 70 feet.

Q19. How many presses do you have? A. Two.

Q20. And how many dryers? A. Twenty-eight.

Q21. What is the size of the dryers? A. They are four foot dryers.

Q22. Since you have been employed in that mill has your machine ever been operated with an elevated breast roll giving a pitch to the wire? A. Yes, sir.

Q23. What is the greatest amount of pitch that has ever been used? A. Fifteen inch pitch.

Q24. When was that first used? A. Well, that must have been put in the year that I was away, between 1908 and 1909,

because when I came back it had the elevated wire.

Q25. It was not there when you went away in 1908, and was there when you came back in 1909? A. Yes, sir.

Q26. Has any change ever been made in respect to this wire and, if so, what? A. You mean what I done to it?

Q27. Yes. Any change you made since you were there in 1911? A. The Eibel Process Co. sued the Champion Paper Co. and Mr. Cadwell came to me and wanted to know if I had any idea of the way to get around using the pitched wire and I told him what I had in my mind for a good while but never could get anyone to try it out; that is, to put the slices back over the center of the breast roll and use a higher slice.

Q28. Putting your wire level you could regulate the speed of your stock by the height of the flow back of the slices? A. By raising or lowering your slices you could change your head so as to shoot your stock down the same speed as the wire.

Q29. What did you do? Did you make that change? A. I made that change. I shut the machine down on a Sunday morning and Monday evening we started up. We moved everything back, the deckles and suction boxes and everything like that, fifteen inches and a half, brought the slice right directly over the center of the breast roll and started up and it has been running that way ever since. With a pitched wire we never run over five hundred feet on the machine but now today I am running 540.

Q30. When was this change made, what year? A. In August, 1911.

Q31. And has your machine been operated continuously ever since that time? A. Yes, sir.

Q32. How many hours do you run in a day? A. Twenty-four hours a day.

Q33. How many days a week? A. Six days a week.

Q34. And has that been the practice since 1911? A. Yes, sir.

Q35. What amount of head back of the slices do you ordinarily use? A. Well, it is about ten inches as a rule for that machine.

Q36. What is the usual speed at which the machine is run? A. Well, we run it from, anywhere from 500 to 540. The condition of wire, the clothing and stock, of course, governs that, and the condition of the stock, of course, governs the head back of the slices.

Q37. What is the character of the paper; that is, what is it used for? A. Newspaper.

Q38. What do you say as to whether you do or do not get a

satisfactory formation of sheet by this arrangement? A. Well, as compared with other machines with the pitched wire I think we get a better formation. I have been told that by a great many paper makers.

Q39. What do you say as to the comparison with the sheet you get with the flat wire and what you got when you used the pitched wire? A. I think the formation is better. The character of the sheet is better; closes up better.

Q40. How about the speed at which you operate the machine with the flat wire and the speed at which you could operate it and get a satisfactory sheet with the pitched wire? A. Well, we have run anywhere from 500 to 540 since we have the flat wire. Before that I never was able to get over 500 feet and have it run safe.

Q41. Is there anything about the machine that limits the speed that you can operate it? A. The drying capacity. Twenty-eight dryers and two presses is about what you can,—540 feet is about what you can drive under those conditions.

Q42. Assuming you had sufficient drying capacity could you increase the speed of the machine? A. I think I could.

Q43. To what speed? A. I think the machine would run 600 feet.

Q44. And make a satisfactory sheet? A. I think so; yes, sir.

Q45. What is there about the stock that affects the speed at which the machine can run? A. Why, your ground wood mostly. If your fiber is too short you cannot get the speed out of it and have it hold together that you can with a better grade of ground wood, longer fiber.

Q46. What do you mean "hold together," hold together where? A. That is break all over the machine, more or less.

Q47. What parts of the machine do you refer to? A. Mostly on the presses. That is where you get the most of your breaks. If the ground wood is too short and sticky you will get breaks with your presses and wont get them with longer fibered ground wood.

Q48. Do you recall my being at the mill last week? A. Yes, sir.

Q49. And a gentleman by the name of Carter being there with me? A. Yes, sir.

Q50. What speed was the machine running at that time? A. 500 feet at that time.

Q51. And what head did you have? A. Ten inches.

Q52. What is the most head that you ever used with this flat wire? A. Between 12 and 13 inches.

Q53. And what is the least? A. 8 inches.

Q54. Under what conditions do you use the eight inch head? A. When the stock is very slow and cannot work much water in it.

Q55. What head do you say you are using today? A. 10 inch.

Q56. And at what speed is the machine running? A. 540.

CROSS EXAMINATION.

By Mr. Lyman:

XQ57. At what speed did the machine run before you left there in 1904 for Berlin? A. Well, we were not running over 450 or 460.

XQ58. And it was about that same speed when you left in 1908? A. Yes, about that.

XQ59. Into what business did you go in 1908? A. I went on a farm in Delaware; I bought a farm in Delaware.

XQ60. Was it constantly as much as 460? A. Well, we were making manila paper a good share of the time then and different weights, of course you had to change your speed. Take it on a thirty pound sheet, that is about similar to a news sheet, you could get up about 460. The machine never made any paper to amount to anything over that speed. We tried it a good many times but we would have to slow it down again.

XQ61. Would you say that 460 was an average for it at that time? A. That is on that weight paper.

XQ62. Would that be the same as for news, that weight of paper? A. About the same as news, yes, sir.

XQ63. Then the result of putting in the 15 inch pitch was to increase the speed about forty feet a minute? A. Yes, sir.

XQ64. At the present time is 500 your average speed, would you say? A. No. We are running over 500 more than we are at 500.

XQ65. Do you ever go less than 500? A. Sometimes; yes, sir.

XQ66. On news? A. On news; yes, sir.

XQ67. What is the reason for that? A. Well, the condition of your clothing on the machine and your stock makes it advisable to slow down.

XQ68. The Eibel Process Co. got a decree against the Champion Paper Co. enjoining that company from using the pitched wire? A. Yes, I believe so.

XQ69. Was this idea of putting the slices over the center of the breast roll a new idea with you? A. Why, I had thought

of it for years and had talked with paper makers that had but no one ever seemed to want to try it out.

XQ70. It was an original idea of yours? A. Yes, sir.

XQ71. The first times that that was tried out was when you tried it out in 1911? A. 1911. That is to my knowledge it was.

XQ72. How much of a head could you carry without putting your slices forward over the center of the breast roll? A. Why, we never used to carry over four or five inches; probably four on an average.

XQ73. What is the reason you could not carry more than that? A. Well, you had an apron extending down from your wire and the weight of this pond down over the wire would cause it to wrinkle, it would sag between the rolls, you know. For instance, that breast roll from the table where it could shoot on down in between these spaces the weight of that pond would sag it down.

XQ74. So, until you got up the notion of putting the slices over the center of the breast roll, you could not get the head say more than four or five or six inches? A. It was not safe to run it, no.

XQ75. Do you happen to have with you a sample of the paper you are making on that machine? A. No, I have not.

XQ76. Could you get one for us? A. What do you mean, to-day?

XQ77. Well, would it be possible for you to get one this afternoon? A. No, I do not think so, unless I go back to Carthage. There is no papers around here that use our output. It is practically all used in Cleveland.

XQ78. What newspapers use it in Cleveland? A. The Leader and the News use our paper.

XQ79. You would be willing to send me a sample? A. Yes, sir.

XQ80. Is your paper as strong in a transverse direction as it is in a longitudinal direction? A. Why, that is one of the things we have claimed for it. Mr. Latimer, used to be with Pusey & Jones Co., was there shortly after we made the change and that is one of the things he talked of. He says, "To tear it you cannot hardly tell which way it is run over the machine."

XQ81. In the present process there do you figure to have the stock enter upon the wire at the same speed that the wire has? A. Try to; yes, sir.

XQ82. What weight paper do you make? A. 32 pounds.

XQ83. That means 32 pounds for 500 sheets of 24 by 36 inches? A. Yes, sir.

XQ84. Do you use a shake on your machine? A. Yes, sir.

XQ85. And the shake had been used ever since you put the wire on a level? A. Why, I have run some without it but I figured it was better to use it; that is, it didn't seem to help the character of the paper so much as it did the wires. The wire, without any shake on, will freeze on the suction boxes, creep one way or the other, where with a shake it keeps vibration there and the guide handles it better, keeps the wire straight on the machine.

XQ86. Do you know how they happened to put in the 15 inch pitch in 1908? A. No, because I was not there. I suppose it was thought it was going to help them out.

XQ87. Has there been any change in the number of your presses or dryers since 1908? A. No, sir.

XQ88. Any other changes in the machine of any kind? A. Why, I do not recall any, outside of renewing parts that were wore out.

XQ89. Did you use the same kind of stock that you used when you used the pitched wire? A. Yes, sir.

XQ90. Has there been any changes in the foundation of the machine in the last ten years? A. No, sir.

RE-DIRECT EXAMINATION.

By Mr. Paul:

RDQ91. What would you say as to whether the paper that was being made last Friday, when Mr. Carter and I were there, was or was not an average of the paper that is made on that machine? A. It was not the average. It was not as good in strength as the average.

RDQ92. Why is that? A. For the reason the ground wood was off; it was short.

RDQ93. And, if you furnish a sample of the paper as Mr. Lyman requested, would that be of better quality than the paper that was being made? A. Better character and better strength. You see different kinds of wood, that is wood from different localities, has to be treated differently of course, the grain and the fiber, and the bur we were using at that time was not adapted to the wood that was used. I went down the next day and made them change over on a different bur.

Mr. Paul: Will you waive signature?

Mr. Lyman: Yes.

HARRY C. KINNE,

sworn on behalf of the defendant.

By Mr. Paul:

Q1. What is your name? A. Harry C. Kinne.

Q2. How old are you? A. Thirty-five.

Q3. Where do you live? A. 1153 Academy St.

Q4. In Watertown? A. Yes, sir.

Q5. What is your present occupation? A. I have charge of the sales department.

Q6. On what company? A. Bagley & Sewall Co.

Q7. Have you, within a few days, visited any paper mills? A. Yes, sir.

Q8. When? A. Tuesday, Nov. 20th.

Q9. What mills did you visit at that time? A. The Remington Paper & Power Co.'s two mills. One at Norfolk, N. Y., and the other at Raymondville, N. Y.

Q10. Did you see any Fourdrinier machines on those mills? A. Yes, sir. Two in each mill.

Q11. Which mill did you visit first? A. Norfolk.

Q12. What were the Fourdrinier machines in the Norfolk mill? A. One is a 100 inch Fourdrinier machine, and the other is a 163 Fourdrinier.

Q13. Those both Bagley & Sewall machines? A. Yes, sir.

Q14. Were both machines in operation while you were there? A. They were; yes, sir.

Q15. Please state the pitch, if any, of wire that was being employed on each machine and the speed at which each machine was running at that time? A. The 100 inch machine was flat, running on heavy paper, and no pitch whatever. The 163 inch machine was pitched at 18 inches and the speed was 515 feet per minute.

Q16. What was it making? A. It was making news.

Q17. What was the speed at which the 100 inch machine was running? A. The 100 inch was running very slow, only about 200 feet. They was making heavy papers.

Q18. Did you time these machines yourself? A. I did, yes.

Q19. Did you examine the paper? A. Yes, sir.

Q20. Would you know that it was good quality of paper? A. Yes, sir.

Q21. Was it good quality of paper? A. Yes, sir; a good quality of paper.

Q22. At what point did you take the time? A. At the finishing end.

Q23. What do you mean, what part of the machine? A.

The speed of the dryers.

Q24. Which dryer did you count, the one near the Fourdrinier or near the end— A. The one near the calenders, the finishing end.

Q25. You also visited the machines at Raymondville? A. Yes, sir.

Q26. How many machines were in operation in that mill? A. Two, 120 and 114 inch.

Q27. What pitch and speed?

By Mr. Lyman:

Q28. Both Bagley & Sewall? A. Yes, sir. The 120 inch was pitched 12 and ½.

By Mr. Paul:

Q29. At what speed was it running? A. 540 feet. The other, the 114 inch, was pitched 14 inches.

Q30. At what speed was it running? A. 427 feet. Running on catalogue, thin paper.

Q31. What was the first machine that you mentioned running on, what kind of paper? A. Running on news.

Q32. And the second one? A. On catalogue paper.

Q33. That is heavier paper? A. No, lighter paper; very thin.

Q34. How did you happen to go up there at that time? A. At the direction of Mr. Stuart D. Lansing.

Q35. Did you give any notice to anybody that you were coming? A. I did not.

CROSS EXAMINATION.

By Mr. Lyman:

XQ36. When were you at those mills before? A. Well, I cannot say. About a year ago.

XQ37. What was the condition up there a year ago? A. At that time they were running entirely on news; the time that I was there.

XQ38. All four machines? A. All four machines.

XQ39. And at what pitch were they running? A. I did not measure, but I—

XQ40. Approximately what pitch? A. The same as they are now except the one that was flat was pitched 20 inches at that time. So I have been told. I did not measure that.

XQ41. At what speeds were they running at that time? A. About—the small one that is flat now?

XQ42. Yes. A. That was running at about 540.

XQ43. How about the others? A. The others were about the same speed they are running now with the exception of the one at Raymondville, the 114 inch, which ran faster, round about

540.

XQ44. Have you any data as to the speeds of those machines at times previous to that visit a year ago? A. No, I have not.

Mr. Paul: You will waive signature on this?

Mr. Lyman: Yes.

H. JAMES CADWELL,

sworn on behalf of the defendant.

By Mr. Paul:

Q1. What is your full name? A. H. James Cadwell.

Q2. How old are you? A. Forty-nine.

Q3. Where do you reside? A. Carthage, N. Y.

Q4. What is your business or occupation? A. I have no occupation at present.

Q5. Have you ever been interested in the manufacture of paper? A. Yes, sir.

Q6. With what mill, what company? A. The Champion Paper Co.

Q7. Where is that located? A. Carthage, N. Y.

Q8. What was your position in connection with that company? A. President.

Q9. How long were you connected with it; that is, between what years? A. A matter of 14 years, from 1902.

Q10. You are not interested in it at the present time? A. In no way.

Q11. Or in any company manufacturing paper? A. No, sir.

Q12. What type of machine is used or was used in the mill of the Champion Paper Co. while you were president? A. Fourdrinier.

Q13. What was the character of the paper that was principally made? A. Of later years news print entirely. News print.

Q14. What was the make of that machine? A. Rice, Barton & Fales.

Q15. Do you remember the width of the machine? A. 132 inches.

Q16. How many dryers were employed? A. Twenty-eight.

Q17. How many presses? A. Two.

Q18. Was that machine ever operated with the breast roll elevated so as to give a pitch to the wire? A. It was.

Q19. When was the machine so operated; that is, with a pitched wire; between what years? A. I do not remember the dates clearly enough to make a statement as to dates.

Q20. About what dates? Can you give some idea? A.

Well, I should say that the breast roll was elevated approximately 1908, or along there.

Q21. And about how long was it operated with the elevated breast roll? A. Well, I have got to guess to answer those questions. I could verify it of course.

Q22. As near as you can state from recollection? A. I should say a matter of three or four years; possibly longer.

Q23. What change was made, if any, in the position of the breast roll and wire in this machine? A. When we changed?

Q24. Yes. A. From a pitched wire?

Q25. Yes. When you changed from a pitched wire what change did you make? A. We put the wire on a level and replaced the slice that was on the machine with one about 15 inches in height.

Q26. What amount of head did that give you, what amount of head could you get with that slice? A. What amount could we get?

Q27. Yes. A. Why, we could get up to practically the height of the slice.

Q28. And about what amount did you ordinarily employ after you made the change? A. That varied with the character of the stock being used. When the stock was as we thought reasonably right for the speed that we used, for the usual speed that we wanted to maintain—I think that better be changed, if you will permit me.

Q29. Go right on and change it. A. I will define that a little bit differently. When the machine speed was 500 feet we used a pond about 10 and ¼ inches in depth.

Q30. And what variation did you make from that pond with different speeds with the machine? A. I cannot answer that question. It was a matter of cut and try. It could be figured out mathematically.

Q31. Do you know at what speeds the machine had been operated since the change was made to the flat wire? A. At what speeds?

Q32. Yes. How high has it been operated? A. Why, up to five hundred and approximately forty feet.

Q33. Had the machine been operated with the flat wire and the pond arranged as you have stated continuously since the change was made up to the time you retired from the company? A. Yes, sir.

Q34. Are you a practical paper maker? A. No, sir.

Q35. Can you state as to the quality of the paper, from a business or commercial standpoint, since the change was made and that that was produced before the change was made from

the pitched wire? A. I was satisfied that it was superior.

Q36. What satisfied you that it was superior? A. The formation and general character of the sheet produced and the ease with which the method was operated.

Q37. Was there anything about this machine that limited you to a speed of 540 feet? A. The make of it. Well, yes, the machine itself.

Q38. What would you say as to the—was there any limitation by means of the number of presses and dryers, would that have anything to do with the amount of paper that could be made at the speed at which the machine could be run? A. The general construction of the machine together with the number of presses.

Q39. Limited it to that speed? A. Yes, sir.

Q40. So far as the arrangement of the flat wire and the pond was concerned what would you say as to whether there was any limitation in those particulars as to the speed that you produced; that is 540 feet? A. No limitation, to my mind, in the use of that method.

Q41. At what speed do you think you could run with a flat wire and high pond that you have on this machine, provided the construction of the machine was such as to stand the speed and you had sufficient drying capacity? A. No limitation.

Q42. How did you happen to make the change from a pitched wire to the flat wire; what was it, if anything, that induced you to make that change? A. The suit for infringement by the Eibel Process Co. brought against the Champion Paper Co. This method was a development of the defense that I was attempting to make; or the method was the result of an attempt.

Q43. What became of the suit brought against the Champion Paper Co.? A. It was settled. It was settled out of court.

Q44. And did that settlement involve any payment of royalty or damages by your company? A. No, sir.

Q45. Do you know whether any patent had been issued prior to the time when you made this change upon the method of operating the Fourdrinier machine with a high pond and flat wire? A. When I attempted to take out a patent on what I supposed was the method developed by us I discovered that a patent had already been issued some two years previous.

Q46. To whom? A. As I recall E. F. Millard. That may not be the initials.

Q47. Did you later acquire that patent? A. I did.

Q48. You or your company? A. Yes, sir.

Q49. And what disposition did you make of it? A. Sold it.

Q50. To what company did you sell it? A. The Eibel

Process Co.

Q51. I call your attention to the patent issued to E. F. Millard, No. 933,656, issued Sept. 7th, 1909, and ask you if that is the patent? A. Yes, sir.

Mr. Paul: I offer this patent in evidence, to be marked Defendant's Exhibit T 9.

Patent marked "Exhibit T 9, U."

CROSS EXAMINATION.

By Mr. Lyman:

XQ52. Do you think that there are any limits to the depth of the pond that you can carry on a machine, Mr. Cadwell? A. Any limit to the depth of a pond?

XQ53. Yes. A. Not as machines are now constructed.

XQ54. In what respect does the construction of the machines at the present time differ from those of previous times? A. I don't know. My only experience is confined to the Champion Paper Co.

XQ55. You say no, as that machine is at present constructed? A. What I am trying to say in answering your question is that there may be limitations; I don't know of any limitations.

XQ56. What I understand you to say, that that pond which you provide for in that machine was sufficient to enable you to make paper at any speed providing the machine otherwise was able to stand the speed? A. It was only limited by the height of the slice.

XQ57. What I mean to say, is the slice that you have in that machine high enough to remove any limitation from paper speed? A. No.

XQ58. You meant that the method had no limitation provided you could increase the depth of the slice and depth of the pond? A. And construct a machine accordingly.

XQ59. Do you remember what speed was attained on that machine when it was run flat before 1908; run with the wire flat before 1908? A. Why, 440 to 450, I would say, approximately. Sometimes we would get it up to around 500.

XQ60. The average would be 440? A. I cannot answer that in that way definitely. All I can go by is memory.

XQ61. That would be your present recollection, that the average would be about 440 to 450? A. About that, approximately.

XQ62. Now, when you put on this pitch in or about 1908, what speed did you get? A. Well, that varied; although we increased the speed of the machine materially had no difficulty in running 500 to 520.

XQ63. And did you ever get above 520? A. At times might.

I would not say that we did not or that we did.

XQ64. Did you get any higher speeds when you put in the high slice and went to the flat wire than you had attained when you were running with the pitched wire? A. Why, we could get greater speed easier with the new method, with the Millard method, than we could with the Eibel method; but the high speed or the extreme speed of the machine for various reasons was difficult to maintain. I mean extreme speed.

XQ65. Is it true that in both cases alike, that is when you were running with the pitched wire and when you were running with the high slice and the wire flat, the only limitation upon the speed that you could get upon the machine was the character of the machine itself, its capacity to run? A. No.

XQ66. What other limitations were there in the two cases? A. The character of the paper produced.

XQ67. Was there any reason why you could not get as high speed with the pitched wire as you could with the flat wire and the high slice? A. I never attempted to determine that point. It meant too much in the change of the machine. In other words, there is to my mind but one point where a certain elevation of the breast roll will work to advantage.

XQ68. But one point. What point is that? A. That would be determined by the speed, the elevation of the breast roll and the character of the stock used.

XQ69. Do you consider that the Eibel pitch had very clear advantages over the flat wire with the slice such as was carried in the times prior to 1908? A. I do.

XQ70. Prior to that change in the slice, which you put in in 1911, had you ever heard of a slice higher than seven or eight inches, or thereabouts? A. No, sir.

XQ71. So that whether or not it is a fact that as good results can be obtained by using an extremely high pond, such as the Champion Co. is using, it remains true that as compared with practices prior to 1907 the Eibel pitch gave a great advantage to the paper maker? A. I so considered it.

XQ72. How did you happen to put in the 15 inch pitch in or about 1908? A. From observing other machines and figuring that our machine would stand the speed or around 540 feet we determined to try the 14 or 15 inch pitch, which we gave it.

XQ73. What other machine had you observed that had that pitch? A. Well, the Remington, those at the Remington & Martin Co., and St. Regis Paper Co., but more particularly a discussion or an inquiry made with managers and superintendents of various mills.

XQ74. That is made by you with the individual? A. Yes, sir.

XQ75. And there generally the concensus of opinion was that this wire was a very great advantage? A. Of an advantage.

XQ76. Now, it is true that that idea was given to the art by Eibel and the Rhinelander Paper Co.? A. I do not so understand it. It was the first trade name that I knew and the first patent I knew of the method, it was the first knowledge I had of the thing although I met a great many people that claimed to have used that previous to the patent being issued.

XQ77. But the idea came into the trade generally about 1907? A. Thereabouts, I would think. So far as I know.

XQ78. This settlement that your company made with the Eibel Process Co. provided that a perpetual injunction against your company from infringing the Eibel Patent should issue and that the Eibel Co. waive all claims of profits and damages, did it not? A. I do not clearly remember that. That may have been it, but they at the same time gave me a license or permission to use their patent if I want to on our particular machine.

XQ79. Are you clear about that? A. That is my remembrance of the settlement.

XQ80. Was the settlement made in writing? A. Yes, sir. There was some talk of that anyway.

XQ81. Who was it that made the settlement with you? A. I may be mistaken but I think a Mr. Cunningham, of a firm of attorneys in Boston.

XQ82. Fish, Richardson, Herrick & Neave? A. Yes, sir. Cunningham was the name, I think.

XQ83. At the time you made this investigation of the other mills that were using a pitched wire, did you find that those mills that had put it in had increased their speeds? A. That was the object, as I understood, of the adoption of the method.

XQ84. And you found that had been done by the St. Regis Paper Co. and the Remington & Martin Co.? A. As I recall it.

XQ85. And the other companies that you consulted about it —what other companies did you consult about it? A. Various companies. I would hesitate to name them. I may be in error, but it was the generally accepted fact, as I understood it, that the adoption of that method was to increase speed and production.

XQ86. Did you go into it far enough to find out what percentage of increase of speed was usually obtained by the adoption of the pitch? A. No, sir.

XQ87. I wonder did you talk with the Berlin Mills people? A. No, sir.

XQ88. The Raymondville people? A. In talking with the Remington-Martin people I did; yes, sir.

XQ89. And you found that the pitch had been put in and the speed increased at the Raymondville mill of the Remington-Martin or the Remington group? A. In talking with the management of the Remington-Martin people I was talking with three mills.

XQ90. The Remington group? A. The Remington group; yes, sir.

XQ91. And those three mills were the Raymondville mill— A. The Norfolk.

XQ92. The Norfolk mill of the Remington-Martin Co.? A. And the Norwood.

XQ93. And the Norwood mill. But what you found was that the pitch had been put in and the speeds increased in all those three mills? A. I would not say that. That is my remembrance of it but I could not state it as a fact.

XQ94. Could you mention anyone else, any other concern that you talked with? A. No, not definitely or clearly.

XQ95. The Laurentide Paper mills? A. No, sir.

XQ96. The Great Northern? A. No, sir. The mills that I did talk with were local mills.

XQ97. The West End Paper Co.? A. Probably

(After the close of the foregoing deposition, a letter from the witness Cadwell was sent to counsel for each party which reads as follows:

"On thinking over deposition made by me in Watertown in November re the Eibel Process Company's settlement with the Champion Paper Company, I find that I was in error in stating that settlement included a license to use on our machine the Eibel process, on the contrary the Champion Paper Company consented to the entry of a decree enjoining them from an infringement of the Eibel patent. Will you kindly see that above statement is added to my deposition."

It is stipulated between counsel that the above letter shall have the same force and effect as if the witness had been recalled and had so testified.)

(Adjourned.)

Mr. Lyman: Yes.

STUART D. LANSING,

sworn on behalf of the defendant.

By Mr. Paul:

Q1. Please state your name, age, place of residence and business? A. My name is Stuart D. Lansing. I regret my age is fifty-one yesterday. My business is building—

Q2. Place of residence? A. Watertown, N. Y.

Q3. Occupation? A. I am a builder of paper making machinery.

Q4. With what company are you at the present time connected? A. I am president of the Bagley & Sewall Co. of this city.

Q5. What is the business of that company? A. Manufacturing and building of paper making machinery, as a main business.

Q6. How long have you been connected with the Bagley & Sewall Co.? A. Thirty years next August.

Q7. When you first became connected with this company what was your position and what were your duties? A. My duties were shipping clerk, receiving clerk, billing goods, cost clerk, general office boy.

Q8. What other positions have you held in the company besides that of president? A. I was secretary and general manager of the company for twenty years before I became president.

Q9. When did the Bagley & Sewall Co. begin building paper making machinery? A. We began in the fall of 1888.

Q10. Was that after you became connected with it? A. Within three months after I became.

Q11. What was the character of the first paper making machine manufactured by this company? A. The first machine we built was an 86 inch Fourdrinier, so called, for newspaper, located in a mill called the Ontario Paper Co., near Watertown.

Q12. Please state briefly the history of the development of the Fourdrinier machine, as constructed by the Bagley & Sewall Co., from the time of the erection of the first machine down to 1905? A. Well, coincident with our commencing the manufacture of paper making machinery was the development of paper making machines of this character throughout the country. This first machine, to give you an idea, ran at 323 feet a minute and, I believe, it was the fastest machine in the world at that time; at least it was of the machines that we were able to learn of. It was very much heavier and radically superior in its construction to machines that were elsewhere in paper mills that I had an opportunity to see. The fact that it did

make speed interested and, I think it is fair to say, that our ambition, if you please, was more towards speed than the broadening particular field of kinds of paper machines. It was a number of years before we built machines for any other purpose than the manufacture of news at high speed, or manilas. The progress in the matter of speed was constant; the fundamentals in the manufacture practically did not change at all, and it was the natural evolution of the machine itself in strength, in the first place, diameter of rolls, the lengthening of the wires, the lengthening of the felts, the increasing of the number of suction boxes, the raising of the ponds behind the slices, the increase in number of dryers and at all times, almost machine to machine, the increasing strength of the machines in the driving, etc., to stand the strain of the greater speeds. This continued until approximately, I think, without any reference to dates, that in about 1898 or 1899, we had attained practically the limit of speed that the paper maker could take care of the paper at the end of the machine. There is where his trouble seemed to lay. At that time one J. J. Warren solved the problem at the winder end, and I think his patent is dated sometime in 1898 or 1899 for a two drum winder, which patent he licensed us exclusively under and for ten or eleven years thereafter we built the Warren winder for our own machines and for other machines. Almost immediately, I would say, that the speed which paper makers were able to use their machines was 50 to 75 feet higher than it had been previously. Then again commenced the improvement in the workmanship, both in strength and in minor designs for convenience in handling. For the interest of you all it is perfectly surprising the little things that the paper maker working on the machine will suggest, and many many of the good things that we have got on our machines have come from some remark that "this is awkward, can't you make it some way different?" The improvement was quite marked and along in 1902, 3, 4, 5, 6 and 7 machines began to assume something like what we term the modern machine. This continued in 1907 and 1908, up to 1912. The increase in weight, strength, and diameter of rolls also was increased, length of wires were increased until we were building a 90 foot wire. As good an illustration as I can give you is that in 1903, I think it was, that we built a 163 inch machine with the total weight of that machine in the neighborhood of 790,000 pounds; in 1916 we built a machine three inches less in width, 160 inches, weighing 1,285,000 pounds, to be used for precisely the same kind of paper. Of course with this were refinements in all directions, in manufacture and every place and spot covered with the nec-

essary materials for strength for fast running. I think that is about as brief a description of a very long proposition that I can give.

Q13. To what extent were you personally familiar with this development of the Fourdrinier paper making machine for your company? A. I was as familiar with it as anyone possibly could be with a person that made probably ninety per cent of the contracts, with fully ninety per cent of the negotiations and supervised the building and tore up the drawings when we made them, when they were not to my satisfaction.

Q14. I call attention to a catalogue, a copy of which has been offered in evidence as Defendant's Exhibit T-2, and I ask you to state what, if anything, you had to do with the getting up and issuance of this catalogue? A. That catalogue is an old friend of mine. That I personally wrote and made from the first page to its last and issued during the middle of the year 1905.

Q15. How soon did you begin work upon that catalogue? A. Oh, I was nearly a year getting it together.

Q16. Have you any correspondence or memoranda to which you may refer to refresh your recollection as to the date when this catalogue was issued? A. Yes; I have a letter. I have a letter here, the Berlin Mills Co., Portland, Maine, Aug. 14th, 1905, signed Mr. L. G. Gurnett, who I think is still with that company, acknowledging receipt of the 1905 catalogue and asking that a similar one be sent to Mr. W. E. Burman, care of the company, at Portland.

Q17. Is this the catalogue in evidence here as Exhibit T-2? A. Yes, sir. I might say, in referring to my diary, I find I worked on the catalogue as late as 1905.

Q18. Referring to this catalogue, beginning on page 25 and extending over for a number of pages, you refer to the speeds of machines of the Bagley & Sewall Co. Will you refer to the catalogue and state upon what you based this information here given in reference to the speeds of these machines? A. I find on page 25 records of machines which we had previously built. The first one referred to is the 90 inch at the St. Regis Paper Co., the cut of which is on the opposite page.

By Mr. Lyman:

Q19. This is the St. Regis? A. This is the 90 inch St. Regis Paper Co. machine, the cut of which is on the opposite page. This machine is located about 15 miles from Watertown and a very convenient mill for me to take customers to in my endeavors to persuade them to leave their money in Watertown. Without a record of mine I would be willing to swear and do

swear that I have counted that machine running many times at 525 feet. In further substantiation on page 37 and 39 is a letter from Mr. George C. Sherman stating that 525 feet is the speed that these machines had attained. I have a copy of that letter here if you wish it.

By Mr. Paul:

Q20. Have you a copy or the original letter? A. I mean the original, if you wish it. The letter is on page 37 and 39.

Q21. Is this the original letter from Mr. Sherman that you referred to? A. Yes, sir; that is the very letter. Dated February 19th, 1903.

Mr. Paul: I will ask that it be marked Defendant's Exhibit T-10.

Letter marked "Exhibit T-10, U."

Mr. Lyman: Objected to as hearsay.

A. The next machine that is spoken of is 1892. That I cannot swear to. That information simply came from the mill. I refer to the Willamette Pulp &—

By Mr. Paul:

Q22. You did not designate that machine? A. Paper Co., making a speed of 480 feet per minute. The following page, No. 27, the 100 inch machine at Remington-Martin reached a speed of 560 feet per minute, and later the same machine at 585 per minute, and the same machine with a maximum of 618 feet per minute. I personally have counted that machine at a speed of 566 feet at the dryers, which would be approximately 574½ feet.

Q23. Where? A. Of paper at the calenders. I have further a letter from the Remington-Martin under date of October 1st, 1904, which is published in the said catalogue on page 75, stating that the paper they enclose was made at the speed of 585 feet per minute, which samples of paper I received.

Q24. The letter you refer to is the one that has been produced and marked Defendant's Exhibit T-3? A. Yes, sir.

Mr. Lyman: The answer is objected to in so far as it purports to state what the letter referred to be done as being hearsay.

A. The speed of 618 feet per minute was told me personally by Mr. A. J. Lewthwaite, in charge of the operation of the machine, stating that he ran the machine for two hours but his ground wood supply was not sufficiently regular or good to maintain the speed.

Mr. Lyman: That is objected to as hearsay.

By Mr. Paul:

Q25. Let me ask a specific question there. These speeds

which you have now referred to, which were counted by you, were all prior to the date of the issuance of the catalogue? A. Yes, sir. I will give you the exact date of the count in a moment. The speed of the 566 I counted personally on Tuesday the 25th day of October, 1904, and made a record in my diary to that effect.

Mr. Lyman: May I see the record, Mr. Lansing? A. Yes. The previous date you will see who I went there with.

By Mr. Paul:

Q26. You might read that entry on to the record if you will, Mr. Lansing. A. All of it?

Q27. Just the part of the record that relates to the counting. A. "At Remington-Martin, 100 inch machine at 566, Raymondville"—do you want the rest? "530. Then to Massena and Montreal. Met Bush, McGill and Carrier. Talked grinders and wet machines."

Q28. Under what date? A. October 25th, 1904.

Q29. That was an entry made by you personally on that date? A. Yes, sir.

Q30. Now you may proceed with the statement as to the speeds of other machines referred to in the catalogue? A. On page 29 I referred to the 100 inch machine at the Laurentide Paper Co. at Grand Mere, Quebec, a picture of which machine appears on the opposing page. This machine on Wednesday the 26th day of October I counted making 552 feet of paper, taken at the dryers. Do you wish this whole entry?

Q31. You might as well read it. A. The entry in my—I don't know what you call it—reminder, is as follows: "Went Laurentide. McGill, Ray (meaning Ray Ball) Bush and Carrier. Machine at 552. Got Pusey & J. stopped in all ways. At Club that night with Sabatin, Woodcock, Acer and Main." Further, in substantiation of the speed, I have Mr. George Chahoon's letter, which we printed in the said catalogue, dated January 28th, 1905.

Q32. That is the letter marked Exhibit T-5, is it not? A. Yes, sir.

Q33. Have you also a letter marked Exhibit T-4? A. Yes, sir. In both of these letters Mr. Chahoon states that the speed is 553, which corroborated my own figures.

Mr. Paul: Those were reproduced in connection with Mr. Kinne's deposition, both of those.

Mr. Lyman: I put in my usual objection. Objected to as hearsay in so far as it repeats the substance of the letter referred to.

A. On page 33 I speak of another machine, 112 inches in

width, at the Raymondville Paper Co., Raymondville, N. Y. In my diary under date of October 25th, 1904, I have entered: "Raymondville machine 530 feet." Which I counted personally. My impression is that that covers the speeds, the high speeds that are spoken of in the catalogue.

By Mr. Paul:

Q34. Look at page 37 and see if there is anything on that page? A. Nothing except what I have already stated that the machine at St. Regis running 525 feet, which of course I saw and counted many and many times.

Q35. Now, these speeds that you have stated for these various machines that you saw were those exceptional speeds or were those regular speeds of the machines? A. They were the speeds that I saw them running and, so far as I know, they were regular speeds.

Q36. And saw them more than once? A. Oh, frequently. It was my business to go to those mills and take people there and separate them from their money.

Q37. What provision, if any, was made for pitching the wire on the machines referred to in this catalogue beginning with the Remington-Martin machine specified on page 25, do you recall? A. If you will allow me to begin with the St. Regis machines which were contracted for in 1900?

Q38. I will modify the question, asking you to begin with the St. Regis machine instead of beginning with the Remington-Martin machine. Tell us the provision, if any, for pitching the wire in the various machines referred to in the catalogue? A. Beginning with the St. Regis machine, in the year about 1900, we pitched the wire about one and one-half inches down-hill towards the suction boxes, and the earlier machines could be adjusted, the St. Regis, for instance, could be adjusted so that they would run with the wire at the breast roll below the level of the suction boxes. In other words they had a range or raise from approximately an inch and a half below to an inch and a half above. The 100 inch machine at Remington-Martin, as I recollect, had about two to two and a half inches above level down towards the suction boxes.

Q39. Did it have any adjustment below level? A. On that one? I am not sure. When we came to the Raymondville machine—

By Mr. Lyman:

Q40. Did you state when the Remington-Martin machine was contracted for? A. The Remington-Martin machine was contracted for in 1901, to the best of my knowledge and belief, but it is not far from there. I may be a few months out. In

the Raymondville contract for their 120 inch machine I specifically stated that the raise should be three inches above level at the breast roll. I would like to ask a question, whether I am confined just to the machines here or—it was right at that time, in May, 1905, or 1906, I know that we built a machine for the Willamette Co. with the three inch above, three inch raise above level at the breast roll.

Q41. Did you state when that 120 inch Raymondville machine was contracted for? A. I could find it.

By Mr. Paul:

Q42. Let me ask, Mr. Lansing, whether this is the contract for the Raymondville 120 inch machine? A. Yes, sir; that is the contract. March 5th, 1904.

Q43. What is the provision in the contract? Will you specify the page? A. The provision in the contract is on page one of the specifications, initialed by me, as follows: "Breast roll hung outside shake posts arranged so as to raise from level to three inches above level."

Mr. Paul: Counsel for defendant offers in evidence the contract and specifications referred to by the witness to be marked Defendant's Exhibit T-11.

Contract and specifications marked "Exhibit T-11, U."

Q44. Have you the contract that you referred to with the Willamette Co.? A. I have, sir.

Q45. What is the provision in that? A. This contract is dated March 28th, 1905, and the provision on the first page of the specifications relating to this matter is: "Wire will have pitch three inches above level at breast roll."

Q46. As a matter of fact do you know how much provision was made for the adjustment of the wire at the breast roll in the Willamette machine? A. No, sir; I do not.

Q47. Have you a drawing here from which you could determine the amount of adjustment? A. No, I have not.

Q48. Of that Willamette machine? A. This drawing shows the machine with the adjustment but I cannot, I could not tell the maximum that might have been attained. It would be limited when the table bar struck the under side of the shake rail.

Q49. You could not determine from the drawing just how much that would be? A. No.

Q50. Could you say whether it would be possible from that to adjust this more than the three inches called for by the contract? A. I could not tell, sir, because it is a case of absolutely laying out. The adjustment is all here. There is nothing there, without instruments, you could determine that absolutely.

Q51. Then, as I understand you, the contract for the Willa-

mette Paper and Pulp Co. machine of March 28th, 1905, in the particulars to which you referred, is the same as the contract for the Raymondville? A. The same. Practically the same wording.

Q52. As to the adjustment? A. Yes, sir. The same wording.

Q53. So there will be nothing gained by offering this specification in evidence? A. Yes; I should think it ought to be in evidence.

Q54. Is it the same as the other? A. It don't read exactly the same but practically the same.

Mr. Paul: Then, if they are not alike,—I do not want to offer duplicate specifications,—if this one differs from the other one I will offer in evidence the contract for the Willamette machine to be marked Defendant's Exhibit T-12.

Specifications marked Exhibit T-12, U."

Q55. Now, I ask you to refer to the drawings which were offered in evidence in connection with the deposition of Mr. Kinne and which were marked Defendant's Exhibit T and Defendant's Exhibit T-1 and ask you to state whether those show the construction that was employed to give the three inch adjustment called for in the specifications Defendant's Exhibit T-11? A. This large drawing of the Raymondville Paper Co. machine, Exhibit T, shows the adjustment required by the contract and, in fact, it will give one-half inch more than the contract, with a possibility of reaching four inches.

Q56. What height of slice was provided for the machines manufactured by you, beginning with the first machine referred to in the catalogue, on page 25, I think it is? A. Eight inches was our practice. If you will let me have those two drawings I will tell you what they were in those two. I cannot recall precisely what it was in the others. In the Raymondville contract, March 5th, 1904, the slices were to be eight inches high, to be arranged so that eight inches depth of water could be carried ahead of the first slice. That is on page four of the specifications, Exhibit T-11. In the contract with the Willamette Pulp and Paper Co., March 28th, 1905, on page 4, the slices to be eight inches high. Referring to Exhibit T-12.

Q57. Do you recall the slices employed in the other machines referred to? A. I think they were all eight inches, sir.

Q58. I call your attention to a reproduction of a page of the trade paper known as the "Paper Mill" dated Feb. 10th, 1906, and to a communication printed on that page signed by Stuart D. Lansing. Are you the Stuart D. Lansing who wrote this letter? A. I am.

Q59. Please say whether this letter correctly states the situation as to the speed of paper machines manufactured by you at and prior to, the time of the writing of the letter? A. It does.

Q60. The letter referred to, is that marked Exhibit T-6? A. Yes, sir.

Q61. I also call your attention to a reproduction of a page of "Wood Pulp News" of Feb. 10th, 1906, marked Exhibit T 7. It appears to contain an advertisement of the Bagley & Sewall Co. Was that advertisement inserted under your directions and authority? A. It was, sir.

By Mr. Lyman:

Q62. What was the machine referred to? A. It shows the Remington-Martin machine, 100 inch wide.

By Mr. Paul:

Q63. On this page, below the cut of the machine, I read as follows: "Newspaper 618 feet per minute." What authority did you have for making this statement? A. On a statement made to me by Mr. A. J. Lewthwaite, the superintendent of the Remington-Martin Co., under whose direction the machine was operated.

Q64. Have you any knowledge or information as to the speed at which the Raymondville and Remington-Martin machines are being operated at the present time and have been operated in the last eight or ten years? A. Why, I have been in those mills a great many times but the only definite knowledge that I recall is that I sent one of my young men, I think day before yesterday, to determine the exact speed and the conditions the machines were running under.

Q65. You have not counted the machines personally? A. Probably have, sir, but I have no personal record of them since the date I have mentioned, when I was getting my catalogue together.

By Mr. Lyman:

Q66. Is that true of the other machines that you have testified about also? A. Will you please put that a little plainer to me?

Q67. Have you personal knowledge of the speeds at which the St. Regis machines, the Laurentide machines, have run since the time when you got up this catalogue? A. Why, I have, just as I have stated, that I am frequently in those mills and check up the speed on the dryers; it is easy to do it with my stop watch; and I have not seen any great difference in the speeds one way or the other in any of those machines. I probably have seen them all each fifteen to eighteen months.

By Mr. Paul:

Q68. That is what I wanted to get at Mr. Lansing, was whether you have any knowledge as to whether the speeds of those machines have been varied from the speeds at which they were running prior to the issuance of this catalogue, as determined by you? A. I never have seen them running any faster than I told you. I do not recall that they were running any slower.

Q69. In this letter to the "Paper Mill" you speak of the Berlin Mills as a "banner installation." What do you mean by that? A. I mean that is the finest exhibit in the shape of a paper making room and giving a display of fine machinery that existed at that time, and I never have seen one that eclipses it since.

Q70. How many machines were there? A. Four 160 inch machines in one room. And I used the words because it was a delight to my heart to see them operating, as I did frequently, without a break while I would be on the premises. Allow me to add, and I was very proud indeed of the installation. It had been made entirely under my directions, I had negotiated the contracts and built the machines and it made me pur to see them.

Q71. At what date had you seen them after your last statement, or how often had you seen them prior to the time of this letter? A. Probably not six months apart for the first five or six years that they ran from their installation. I have not been up there as frequently lately.

Q72. When were those machines installed? A. They were installed in 1904. The contract may have been in 1903. It was a large contract for us.

Q73. Do you recall at what speeds those machines were running in 1904 and 1905? A. Yes. I saw those machines in their earlier days operating at 475 feet. I can give you the date of one entry of that character if you wish. Friday the 28th of October, 1904, I counted the machines making 475.

Mr. Lyman: That means all four machines?

A. Well, I could not tell you.

By Mr. Paul:

Q74. What is the entry you have, Mr. Lansing, under that date? A. The entry is: "Berlin. Mr. Brown sent for us to come to his house. Morning, at mill, grand sight. 475 feet. Gave Ray (meaning Ray Ball) price $35,000. $2,000 less for 3rd breast roll. Burgess then with Corbin at mill and in evening."

Q75. That 475 feet was the speed taken where? A. At the

dryers, sir.

Q76. That would be what speed at the calender roll? A. It was about one and one-half per cent faster at the lower calender roll.

Q77. That would make about what speed? A. Approximately 482 at the lower calender roll, where the paper is delivered to the reels.

Q78. Where do mills count the speed of machines? A. The paper mill I think universally counts its speed of paper produced at the lower calender roll, but it requires a counter, revolution counter to take this and, for my own convenience, I take it on the dryers itself as it is very easy.

Q79. That has been your practice? A. That has been my practice.

Q80. And the speeds referred to in your catalogue and in your testimony were taken by you— A. All the speeds referred to by me as taken by myself are at the dryers, which are approximately one and one-half per cent less than the bottom calender roll by the means in which I take it. I would like to qualify that for fear somebody may question the method. I use on a four foot dryer the circumference of 12.5 and multiply it by the revolutions, whereas the exact decimal is 12.5664. The draw at the calenders is one per cent faster than the dryers and the one-half per cent is made up practically in my method of calculation.

Q81. Are you familiar with the speeds that were being obtained by the machines of other manufacture along the years of 1900 to 1905? A. Only in the manner of checking them up, as far as they got when speeding.

Q82. What is the fact as to speeds obtained by other manufacturers during those years? A. I never saw a machine during those years that equaled the speed that we were attaining both at Remington-Martin, Raymondville and at Laurentide.

Q83. What was the best speed of other machines that you recall? A. I think some Pusey & Jones machines reached 525 and 530.

CROSS EXAMINATION.

By Mr. Lyman:

XQ84. What Pusey & Jones had you in mind in your last answer? A. I had a machine at the Laurentide that was right near the one that they put up, in the same room, opposite; and I had in mind some machines they had put in over at Fort Edward, N. Y.

XQ85. What was the usual, normal speed upon a modern paper machine in those days? That is up to say 1905, taking

the trade bye and large? A. I could not answer that, sir, from any counts that I made.

XQ86. No, but from your general knowledge of the trade? A. I think they were around 475 to 480.

XQ87. What speeds are being attained by news machines today? A. Approximately six hundred feet.

XQ88. Are the same machines that in 1905 were running at 450 to 475 feet making these 600 feet speeds now? A. None to my knowledge.

XQ89. You have not stated whether there has been any change in the speed of the Berlin mills machines since you inspected them in 1904? A. Oh, yes. If you will allow me to state, without being able to show you exact figures, I have, in my frequent visits, as I have stated, for many years there, I have seen those machines rise to 500 feet, 525, and I think, from the best of my memory, the highest speed I have seen them go was in the neighborhood of 550 feet.

XQ90. Referring to the Laurentide machine, which is mentioned in the catalogue at page 29, what, if any, was the adjustment provided at the breast roll of that machine? A. I could not answer that without reference to the drawings and to the contract, but I believe it is, it will be found to be one and one-half below and one and one-half above.

XQ91. What about the Raymondville? A. That, to the best of my belief, is about the same thing.

XQ92. The Raymondville 112 inch machine? A. Yes, sir. I can obtain that by reference to our drawings, if you desire.

By Mr. Paul:

XQ93. The drawings, Exhibits T and T1, show the second Raymondville machine? A. Yes, sir.

By Mr. Lyman:

XQ94. You said that this drawing, Exhibit T, was the drawing for the 120 inch machine at the Raymondville Co.? A. Yes, sir; that is the Raymondville 120.

XQ95. How do you figure on this drawing the elevation possible at the breast roll? A. The elevation of the breast roll would be at maximum when the screws are raised under the breast roll and under the table bars to a point where the table bar strikes the shake rail, which is this support roll running along the machine.

XQ96. Tell me where you get that three and one-half inches? A. Three and one-half inches is the limit of the slot here and the limit of this screw coming down here. These are slotted. If the supporting screw of the table bar was at the bottom of that slot the elevation is at its lowest point; if it is at its maxi-

mum that was three and one-half inches on that machine. I think that is shown in detail there.

XQ97. Referring to Exhibits T and T-1, we have just examined these drawings together and I believe that you agree that the extent of the possible adjustment shown on these blue prints, if the blue prints be assumed to be correct, is three and one-fourth inches above the level instead of three and one-half or a possible four, which you mentioned on the direct examination, is that correct? A. I would say that is correct so far as that little drawing there is concerned, Exhibit T-1, based on the, on our measurements on the drawings at this moment.

XQ98. Your statement as to the three and one-half or four inches was based upon the blue prints, was it? A. It was based upon having my engineer lay it out this morning and his statement to me was as given, three and one-half inches, but it could be pushed to four inches.

XQ99. You never examined the actual measurement as put in? A. Oh, no, I never did, sir.

Mr. Lyman: The testimony as to any statement made to the witness by the engineer is objected to as hearsay.

XQ100. What was the purpose for which these slight adjustments were made upon these machines enabling one to vary the position of the breast roll slightly above or slightly below level? A. The adjustment on those machines were made to give a better speed on the paper for, the first reason, that in running fast a longer wire was used and, therefore, the stock could remain longer on the wire, and the increased volume of stock was required and the pitch down-hill, plus the higher slice, gave speed to the stock which would enable the proper quantity to go on to the wire at the speeds maintained.

XQ101. What was the reason for providing these machines with a possible up-hill pitch? A. In some cases that would be due to the fact that the paper makers with whom we were dealing were a little sceptical, from their own past experiences with running machines up-hill, to utterly cut themselves away from their old lines; and he retained those prior to 1900; and between that and back to 1890 ground wood pulp was made in such a way in the majority of mills that it required an up-hill motion, the pulp being very slow, the speeds being consequently low, they felt that they got more water out of it on an up-hill wire.

XQ102. Did it have anything to do with the question, whether you had a quick stock or slow stock? A. Well, the slow stock, as I just stated, practically required the up-hill motion and the up-hill operation of the wire.

XQ103. Why? A. To give more time to get the water out, and those speeds were very low.

XQ104. And was the use of the down-hill adjustment the converse, the purpose of the down-hill adjustment the converse of the up-hill adjustment? A. Not in itself. It was used in connection with a freer stock. Gives as an ordinary rule freer stock on higher speeds.

XQ105. It was used with freer stocks because it was necessary to, since the stock lost its water more rapidly, it was thought desirable to leave it on the wire if the wire were level, is that it? A. It would carry its volume farther on the wire, is that your question?

XQ106. Yes. A. Yes, it would carry its volume farther on the wire.

XQ107. And that is the reason for the adjustment down-hill? A. That was part of the reasons that entered into the matter.

XQ108. Was your experience with this adjustment of from an inch or two below level up to two or three inches above level such as to convince you they were a good thing? That it was a good thing to have the down-hill adjustment on news machines? A. Our experience was very satisfactory with those, and we continued it.

XQ109. In 1906 did you think that a down-hill adjustment of three inches was a good thing on news machines? A. Yes, sir.

XQ110. I have here a copy of a letter from you to the Rhinelander Paper Co. dated February 22nd, 1907, in which you are speaking of the matter of the adjustable Fourdrinier parts on the machines, and you say in the letter: "We do not wish you to think that we are going on record with you that we decry the use of the easily adjustable Fourdrinier part. There are certainly conditions in manufacture particularly with bag papers where the quality of the soda, sulphite and rag and ground wood are varying so that the difference in stock may be from comparatively slow to absolutely live or free stock, but on news it is useless and on 95 per cent of the machines that we build we put our regular standard shaped shake which will make paper at 600 feet a minute and continue to do it just as long as anybody wants it to." I have quoted correctly from the letter written by you to the Rhinelander Paper Co. of February 22nd, 1907, have I not? A. Yes; you have.

Mr. Lyman: It is noted that the letter from which the quotation has been made is one which was marked for identification at a previous session Exhibit X-U.

XQ111. Does not that indicate to you that when that letter was written you did not think much of the adjustable Fourdrinier for news machines? A. Mr. Lyman, you are confusing two entirely original different propositions as different as night from day. When I use the word "adjustable Fourdrinier" I mean a Fourdrinier similar to the modern Moore & White, the New Century shakes of Pusey & Jones, the Trowbridge shake made in Hamilton, Ohio, as opposed to what I term our regular shake. It has nothing whatever to do with stock; it is as different between whether your suit is black and made of wool or white and made out of cotton. It is the necessary flimsy construction of an adjustable Fourdrinier that I am criticising as opposed to our solid shape which will run at any speed and stand the strain. If you are familiar with those shakes you will understand what I mean very much easier.

XQ112. Why didn't you put that three inch adjustment on these high speed machines of yours? A. The three inch adjustment, sir?

XQ113. Yes. Why did you put on that St. Regis machine a pitch of only one and one-half inches? A. That was in 1900, sir, and this letter was written in 1907, and we were putting three inch on all of them.

XQ114. What machines did you put three inches on in 1907? A. Well, at that time, the Raymondville; the two contracts I have got in here; the Raymondville, the Willamette; 1905 and 1907. May I ask whether you mean the three inch adjustment as referring to the adjustable, that I speak of here?

XQ115. Yes. A. May I show you what I mean by an adjustable Fourdrinier?

XQ116. Certainly.

(Witness illustrates.)

XQ117. It is a matter of fact, is it not, that in 1907 or thereabouts all of these machines that you have referred to, the St. Regis, the Remington-Martin, Laurentide and the Raymondville machines, were given high pitches to the wires? A. Excusing the nailing of a date, 1907. About there. I think that each one was jacked up twelve inches or thereabouts.

XQ118. Do you know how that came about, how did it happen that all at the same time there they were given these high pitches? A. Why, I do not,—the way you fellows pin me down as to what I know,—I don't know but I can imagine because in,—I saw the first one myself on August 16th, 1907. That was out in Grand Rapids, Wis., in the mill of the Consolidated Paper Co. I had never seen one anywhere before and I never heard of the name Eibel, nor did I hear at that time of Rhinelander

even. The man had it jacked up and I discussed it with him.

XQ119. Could I see your entry of that? A. Yes, sir. No, I can't show the entry of that but I can show an entry of being at that mill, and that is where I saw it. It is a funny thing I did not make an entry but I was out valuating all the mills in Wisconsin with the exception of Rhinelander and the upper mill I went into one afternoon evidently after our work was over, but every other mill in Wisconsin, if there were any other left I don't know where they were. (Witness shows entry in diary.)

XQ120. How high did they have the wire jacked up? A. As I recall it, twelve inches.

XQ121. When did you first hear Eibel's name in connection with the matter? A. I could not say, but it was some time after that, sir.

XQ122. Well, was it about that same time A. Well, whenever,—if you have the date of when these mills generally jacked their machines up why that is probably the time I heard the name of Eibel.

XQ123. You say in this letter to Rhinelander which is dated Feby. 22nd— A. They did not say a word to me, anything about the thing, in any way, shape or manner. Evidently they were trying to find out what we were doing but his name don't appear on here. I never heard the name of Eibel until,—why, you can guess yourself I don't know, it may be it may have been six months after or may have been a year.

XQ124. There is not any doubt that this practice of putting in high pitches originated with the Rhinelander Co.? A. I would not say that. This date 1907, that you speak of, I think you termed it "that period." So far as I know I believe that it is called the Eibel or the Rhinelander scheme.

XQ125. It struck even you as surprising when you saw it at the Consolidated place? A. I was very much interested.

XQ126. Do you remember who you discussed it with out there? A. Not by name, sir. It was the superintendent of the mill though, whoever he was.

XQ127. You say "very interesting thing;" is not the adjective "surprising" properly to be applied to it? A. No, nothing is surprising in what a paper maker does, Mr. Lyman. They are literally without rhyme or reason.

XQ128. You have to be prepared for anything? A. Both in the mechanic in the mill, in the man running the mill and the owner.

XQ129. Did you go into the theory of it with this man out there with the Consolidated? A. As far as he could give me any theory.

XQ130. It was a new idea to you at any rate? A. No, not a new idea. It was a new form, so far as I had seen it, had ever seen it.

XQ131. You mean by that that the height of the wire, that the pitching of the wire to such an extent, was an unheard of thing? A. I had never seen the wire pitched as high as that.

XQ132. In speaking of the history of the business you said that in 1898 or 1899 there had been reached a speed which was as much as the paper maker could handle? A. Yes, sir.

XQ133. What was that speed? A. It was in the neighborhood of 450 to 475, in there.

XQ139. Could you tell any machines that were running at 450 in 1898 or 1899? A. You ask me to swear to it; I cannot do that, but I have counted them many a time. I think it would be fair to state that the Gould Paper Co. was making that speed, and the Willamette Pulp & Paper Co. The Willamette on a number of machines, probably.

XQ135. I see in this article of yours in the "Paper Mill" that you say that as good a sheet of paper can be made between 500 and 550 feet a minute of news as any that is made between 300 and 350 feet but it says that people have realized that the stock which is used for these high speeds must be of a quality which is produced in pulp mills by the greatest care. Does that mean that the stock that was used upon these machines at the St. Regis and Laurentide, Remington-Martin and Raymondville mills had to be specially prepared? A. Not specially prepared, simply carefully prepared.

XQ136. In what way did it have to be carefully prepared? A. It means that in the pulp mill, care must be given that the stones upon which the wood is ground must be sharpened with such care and frequently enough so that neither from the excessive sharpening too coarse pulp is made nor too fine pulp by reason of the stone becoming dull.

XQ137. Why did you have to have this carefully prepared stock for use on those machines? A. Merely that with an irregular stock a paper machine cannot maintain either a regular quality of paper or a regular speed.

XQ138. You could not use at those speeds stock that could have been used at lesser speeds? A. At those speeds you mean high speeds?

XQ139. Yes; those speeds you have referred to? A. You could use the stock that you had used at lower speed but it would result in breaks and what the paper maker terms "broke," together with a bad looking sheet.

XQ140. Now, is it necessary to use a carefully prepared

stock when you are using the pitched wire in making those same speeds? A. Just the same.

XQ141. Why was it, do you suppose, that these machines of yours put in those high pitches have continued with them? A. Hoping to get some benefit and, not at all unlikely, to be in the running with the other paper making concerns.

XQ142. Do you or do you not think they did get some benefit from those pitches? A. I have failed to see one machine that has ever made greater speed than the same machine was producing before it was raised, providing that that machine was a machine that was built properly and was attaining and could attain high speeds before the raise was put on.

XQ143. Have you, since 1907, built one single news machine which has not had a pitch of at least eight inches? A. We have never built a machine in our lives that we gave a pitch beyond, I believe, three and one-half inches. We arranged independently and detached from the breast roll and the purchaser can run it fifty inches or five inches or any way he pleases, building his foundations and the so-called jacks for it. I think in only two instances have we ever made the cast iron jacks and they were for people who, we understood and believed, had a license from this Eibel Co.

XQ144. Isn't it a fact that you have refrained from making those jacks for the fear that you might be charged with infringement of the Eibel patent? A. Not for fear. There was no necessity of ever taking on any infringement.

XQ145. Can you name any news machine, sold by your company since 1907, which has not run with a pitch of at least eight inches? A. As we erected it?

XQ146. Yes. A. I do not recall one.

XQ147. Do you mean to say, Mr. Lansing, that all these manufacturers are using those pitches for no real advantage? A. I cannot answer the question, sir.

XQ148. You don't know whether there is an advantage or not, is that the way you want to leave it? A. No, I fail to see the advantage. You ask me what their conclusions are. I don't know. I believe there is no advantage.

XQ149. Now, in the article here in the Paper Mill, you speak about a particular machine where news was being manufactured at 520 to 530 feet per minute, but the quality was poor and they made the change in the character of the stock or ground it differently, they first slowed down to 460 feet and they made a change in the character of the stock and got back to 500 feet. What machine were you talking about there? A. That was the St. Regis Paper Co..

XQ150. And what machine particularly? A. All four of them, but the particular machine that has come into this has been spoken of as the 90 inch.

XQ151. Now, did that all happen after the time when you counted the production on that machine and figured it out to be 530 feet? A. 525.

XQ152. 525 to 530 feet? A. Yes; that occurred after they had reached the speed and then the paper was wretched and to improve the paper they began at the right place and began to get good ground wood made in their own mill.

XQ153. So that that speed of 530 feet was not constantly made, constantly maintained with a good quality of paper? A. Not with poor ground wood.

XQ154. Well, was it ever reached again with the good wood? A. Run ever since. Running today.

XQ155. It is running to day with a pitch, is it not? A. I think it is.

XQ156. When you wrote about it in this article of yours you merely said,— A. It was without a pitch at that time.

XQ157. And you said it had attained a speed of 500? A. Yes, sir.

XQ158. Now, in view of that fact, do you wish to say it was running at 530 constantly with no pitch? A. It was running 525, sir, I want to correct you on that, constantly, without pitch, and making an excellent sheet of paper, a particularly good sheet of paper, both corrected through laxity in their ground wood mill.

XQ159. Now, about those other speeds that you have testified to, were those maintained from the beginning or were they subject to variation, did they go down hill? A. You refer,— one of the exhibits there from Laurentide, I think you can answer that question right from that.

XQ160. I am asking you for your answer? A. They maintained it and even increased it.

XQ161. Was that true of the 618 feet at the Remington-Martin? A. That was an experiment for a short time to see what the limit of speed could be attained, obtained by Mr. Lewthwaite on that machine. That was only for a few hours.

XQ162. How about the 580 feet? A. 580 feet,—he ran steadily at that.

XQ163. For how long? A. For quite a period. I could not tell you how long. During that time he sent me many samples and I passed them on to my friends.

XQ164. Did he ultimately abandon that speed? A. 585? Not to my knowledge.

XQ165. You think he continued that? A. I think he continued that all the time he was there.

XQ166. What would be the production per day at 525 feet per minute on that St. Regis Machine? A. Oh, approximately 25 tons.

XQ167. 90 inch machine? A. About 23 tons, 23 to 24.

XQ168. And what would be the production upon the Remington-Martin machine at 580 feet? A. I think that machine has made 28 tons.

XQ169. No, I ask you to tell me what would be the speed, the production for a day? A. A speed of 580 feet per minute,—you can figure that if you know the width of the paper and how many interruptions there were.

XQ170. You know? A. It is a simple calculation, that is all.

XQ171. Let us see you do it, if you will? A. What is the width of the sheet on the machine, what is the weight of the paper, how many breaks do they have, how many hours do they run? Tell me all those things and I will give it to you.

XQ172. You can do it yourself? A. You have to show us the weight, and the sheet is 24 by 36 or there is 500 to the ream or 480 sheets, what kind of ream are we going to have?

XQ173. You are an expert here, I am not. A. I cannot figure something unless you tell me. 585 feet is the only thing you have given me.

XQ174. You purport to know about that machine? A. I do.

XQ175. Now, I do not purport to know about it and I would like you to tell me? A. Why do you want me to go through all this? All right. That is a 100 inch machine, we will say they were making 84 inches of paper, will that satisfy you?

XQ176. I don't know whether it will satisfy me or not. A. I don't know, I am sure.

XQ177. I ask you how much they make? A. According to their orders. No one can tell. They could make 84 inches of paper nicely.

XQ178. They would naturally trim as much as they could? A. According to their orders. You and I are getting into an argument. We should not do that. 585 feet, 84 inches of paper, 480 sheets to the ream, we will assume the paper is ordinary news at 32 pounds. Is that right?

XQ179. If those are normal conditions. A. How many hours are you going to run? There is some washing up. 22 or 23?

XQ180. 22 would be fair. A. With a 22 hour run, the ma-

chine trimming 84 inches of paper at 585 feet, 480 sheets to the ream, 32 pound paper, with no further allowance for stoppage or breaks would produce with E. & O. 61,248 pounds.

XQ181. You are assuming 22 hours? A. I am assuming 22 hours.

XQ182. That is about normal? A. That is about normal. Of course if you figure 500 sheets it would be just the difference between 480 and 500, and in one market it is 500 and the other it is 480.

XQ183. Were the Berlin mills machines provided with any adjustment at the breast roll? A. Why, I think they had the inch and a half below and inch and a half above. Before I would swear to it I would simply like to look at the drawings, but I think that is what they had. They come right in that period.

XQ184. Which period? A. They were built round 1903; they followed the St. Regis and the first Raymondville, and they followed the Remington-Martin two machines, so I imagine, unless there was some reason which I cannot imagine now, that they probably had a pitch of an inch and a half below to an inch and a half to two inches above.

XQ185. Is it your idea that increasing the head carried back of the slices has the same effect as giving the pitch to the wire? A. I think is has a better effect, sir.

XQ186. I was not asking whether it was better or not. Does it act in the same way or does it act differently? A. It is not the same.

XQ187. Why not? A. Because that shooting the water from the pond it gives velocity to it at once, it don't have to be acquired either by the pulling of the wire or the so-called gravity action running down hill.

XQ188. And that has a different effect upon the formation of the paper, whether for the better or worse, than the giving of a pitch to the wire? A. Yes; better or worse.

XQ189. Speaking generally with relation to the paper making industry were speeds increased substantially between the years 1900 and 1906? A. Yes, sir.

XQ190. Why didn't you give this Willamette machine that you spoke of, which you contracted for in 1904, an inch and a half more pond behind the slices instead of giving it an inch and a half more adjustment down hill at the breast roll? A. I could not say, sir. Whatever discussion there was of that is in the mazes of the past, I could not tell you.

RE-DIRECT EXAMINATION.

By Mr. Paul:

RDQ191. What was your object in changing from the inch and a half adjustment below and an inch and a half above to the three inches entirely above as represented, for instance, by the Raymondville shown in drawings Exhibit T and T-1, specification T-11 and Willamette specified in the contract Exhibit T-12? A. It was to get the stock more rapidly onto the wire with the length of wire. Increase in each of those instances from usual condition, looking for speed, plus the pond, would shoot water or stock at a speed more nearly the wire, and it was in the line that we had been working on for sometime past, as I already have given testimony.

RDQ192. When you saw this machine at the Grand Rapids mill with the 12 inch pitch what pond was used back of the slice? A. That was the unusual condition; struck me more forcibly than the rest of the Fourdrinier; one slice had been taken out entirely and the other slice carried practically no pond at all behind it.

RDQ193. The letter to which your attention is called, that you wrote to the Rhinelander Paper Co. under date of February 22nd, 1907, was that in response to a letter you had received from them? A. Yes, sir.

RDQ194. And have you the letter that you received from them, from the Rhinelander Co.? A. Right there.

RDQ195. That is a letter dated February 18th, 1907? A. Yes, sir; it is.

Mr. Paul: I will offer that letter to be marked Defendant's Exhibit T-13.

Letter marked "Exhibit T-13-U."

RDQ196. What is the practice as to the exercise of care in the grinding of wood at the present time as compared with the earlier practice, say in 1906, or prior thereto? A. It is very hard to differentiate between a year, as you ask that question, but the pulp mills were the most neglected end of the paper business. While that condition exists today in many places yet in the earlier days of my experience in the trade the cheapest and poorest class of labor were employed there; they were working in the wet, in the steam, in the winter, and men that could earn a living elsewhere would not work in the mill. The result was that stones would be improperly sharpened, as I before stated, the pulp would be varying and, at certain dates, I cannot say 1906 or 1900, many of the mills were running with light grinders and impossible to put pressure on the stone, the stones would be ground off dull, almost a pulp

in the shape of flour, and then they would be jigged up and it would come off like sawdust. It made it utterly impossible for any paper maker on any paper machine to continually perform its function of making good paper at all times or maintaining speed at all times. Today the care that is given to pulp mills is apparent in practically all the mills that I have visited. In many instances they are employing experts who teach the people how to make ground wood as it should be made. As an instance, the Laurentide, Dalton Paper Co. have employed the owners of the Hall Process Co. to teach them how to make ground wood. As ground wood is the basis of newspaper making it is perfectly reasonable to see that unless it is uniform and of a quality a good paper at high speed cannot be made.

RDQ197. Does that apply to all paper machines? A. That applies to all paper machines, whoever makes them.

RDQ198. I think you explained off the record what you criticised in the way of an adjustable Fourdrinier or what you were referring to by adjustable Fourdriniers in this letter to Rhinelander Paper Co. of Feby. 22nd, 1907. I wish you would explain for the record just what you meant? A. I can do it briefly as follows: We distinguish in our business, and I think all other manufacturers of paper making machines do, between a machine that has an adjustment vertically with its breast roll and its table rolls as compared or contrasted with what we call an adjustable Fourdrinier. The latter have a combination of various sundry pieces making the whole shaking part of the machine into a form of suspended truss and bringing the weight at the breast roll end upon two bearings only which, with the vibration of the machine necessary in the manufacture of paper, causes the so-called adjustable Fourdrinier to wrench itself out of line; and, in addition, this adjustable Fourdrinier can be raised while the machine is running or, in the same manner, lowered by various means of mechanism for attaining the purpose. In the letter of Feb. 22nd, 1907, it is that type of Fourdrinier, for the high speed that I deprecated, as I do today.

RDQ199. You called Mr. Lyman's attention to a blue print which I think you said showed a device that you had employed for adjusting one end of a Fourdrinier. What is that drawing, what does it show? A. That is the drawing of the celebrated Lansing Fourdrinier, which was used in two instances and abandoned.

RDQ200. Why was it abandoned? A. Because we ran into the patent of one H. L. Cutter, if I have his name exactly right, of Hamilton, Ohio. He claimed when we used a truss of that shape that it infringed. As I was not particularly enamored of

the thing we abandoned it.

RDQ201. How was this adjustable? A. This was an effort to do away with the flimsy supports under the breast roll where we could support the weight of the Fourdrinier and the truss and therefore, we used our standard method under the breast roll and adjusted the suction boxes and this end of the truss vertically. In this instance the lowest position of the suction boxes were three feet and one-half, according to the figures on the drawing, and the maximum of the breast roll was three feet six and one-half, so that this would give a maximum pitch of just three inches; and when we wished to run it level the whole arrangement was raised, the wire would run level and pitch down from the end of the truss to the couch roll running across the suction boxes.

RDQ202. When this was adjusted so that the end of the Fourdrinier was down at the suction boxes what was the position of the part of the wire between the suction boxes and the guide roll? A. The wire ran in a straight line across the top of the suction boxes; whatever the position would give us the suction boxes would pull the wire to them; that line would not be horizontal but it would be a straight line.

RDQ203. Was there any pitch to that part of the wire in the part towards where the suction boxes had the three inch pitch, that you speak of? A. Yes; it would have the proportionate pitch to complete the line, straight line from the first suction box towards the guide roll to the breast roll. This was given June 12th, 1902.

RDQ204. What machines were built like that? A. There were two built and sent to the Lockport Paper Co. and the one that Hammerschlag manufactured at Garfield, N. J.

Mr. Paul: Mark that drawing Exhibit T-14.

Drawing marked "Exhibit T-14-U."

A. That Hammerschlag machine was constructed a year or so later than the one for the Lockport Paper Co.

Signature waived.

Printing of notary's certificate waived.

DISTRICT COURT OF THE UNITED STATES,
DISTRICT OF MAINE.

EIBEL PROCESS COMPANY,
Plaintiff,
vs.
MINNESOTA & ONTARIO POWER COMPANY,
Defendant.
In Equity, No. 769.

Depositions taken on behalf of the defendant in the above entitled case, before Henry L. Beach, Notary Public, commencing on Friday, November 23rd, 1917, at 11 o'clock A. M., at the office of the Bayless Pulp and Paper Company, Phelps Building, Binghamton, New York, pursuant to stipulation and agreement of counsel.

Appearances: On behalf of plaintiff, Mr. Harrison F. Lyman. On behalf of defendant, Mr. A. C. Paul.

And thereupon the following proceedings were had:

GEORGE H. BROWN,

a witness called on behalf of the defendant, being first duly sworn, deposes and says, in answer to questions by Mr. Paul, as follows:

Q1. What is your full name? A. George H. Brown.

Q2. Where do you live, Mr. Brown? A. Austin, Potter county, Penna.

Q3. What is your age? A. My age is 33.

Q4. How long have you lived in Austin? A. Since March, 1902.

Q5. What is your occupation? A. Paper maker.

Q6. By whom are you employed? A. Bayless Manufacturing Corporation.

Q7. How long have you been employed by the Bayless Company? A. Since March, 1902, with the exception of about 14 to 16 months. That was during 1903 and 1904 I was absent.

Q8. What has been your work with the Bayless Company? A. I have worked in the machine room at various positions up to tour boss.

Q9. What is your work at the present stage? A. Tour boss.

Q10. What kind of machines are employed in the Bayless mill? A. They are Horne paper machines.

Q11. How many of the Horne machines are there? A. Two.

Q12. Is there any machine there besides the Horne machines? A. Yes, sir.

Q13. What is that machine? A. I really don't know what you would call it for it is parts of different machines put together, different makes.

Q14. That is a paper machine? A. That is a paper machine, Fourdrinier paper machine.

Q15. Were these Horne machines in the mill when you went to work there? A. Yes, sir.

Q16. That was in March, 1902? A. Yes, sir.

Q17. Were both of the machines in operation at that time? A. No, sir.

Q18. Which of the machines was in operation? A. Number 2 machine.

Q19. Is there any difference between the machine you call No. 1 machine and No. 2 machine? A. There is in the size of them and in the width, yes.

Q20. As originally installed was there any difference between the two machines except in the width and size? A. No.

Q21. I call your attention to a blue print, which I will have marked for identification Defendant's Exhibit V (marked for identification Defendant's Exhibit V), and ask you to state whether this substantially represents the Fourdrinier ends of the Horne machines in the Bayless mill as installed in 1902? A. Yes, I recognize this as one of the machines installed there.

Q22. I call your attention also to a model I have here in the room, which I will ask you to examine, and ask you to state whether that is a fairly illustrative model of the frame and means of supporting the paper making wire and adjusting the breast roll end of the same, considering that this belt of cloth is taken to represent the wire? A. There is some rolls left out in there.

Q23. What is left out? A. They have several table rolls. These come down to the suction boxes. On the present machine there are now five suction boxes, from the post here down to the couch roll is where the suction boxes are located. I see there are several carrying rolls missing.

Q24. So far as the arrangement of the frame and breast roll, guide and lower couch roll, and the means for adjusting the breast roll, state whether the model is fairly illustrative of the arrangement of these parts in the Austin machines? A. Yes, sir. The Austin machines has a hollow post up here, and a screw comes down through. This is fastened on to the Fourdrinier part, and anytime during the operation that can be lowered or raised, according to the size of the paper we are run-

ning, speed of the machine.

Defendant's counsel asks that the model be offered in evidence as Defendant's Exhibit V-1, illustrative model of the Bayless machine.

Mr. Beach: It may be considered Defendant's Exhibit V-1.

Q25. Now, Mr. Brown, will you please state what the practice was in this mill after you want in there in 1902 in reference to the adjustment of the breast roll end of these machines, and the speed at which the machine was run? A. Well, sir, when I first started out there, we were trying out various weights to find out which was most suitable for the machine and as we came on the lighter weight paper they found out they had to raise their pitch up so as to carry more water down over the wire to the suction boxes. A fellow by the name of Mr. Anderson, you might call him assistant superintendent, or practical paper maker, whichever you choose, he found out when he brought this end up here to a certain given height it came down here to this post. We had a bend there. You see this here was on a level here, and this being raised up, he found out that he would have to put a block under the middle post by the stretch roll to raise that up and give more slant down to the guide roll.

Q26. To get that a little clearer, I wish you would state again, and instead of saying "here" and "there," use some word that will describe the different parts. Can't you state that again and do that? A. Yes, sir. In raising the breast roll, to give it a pitch, a true pitch to the guide roll, they had to put a block under the middle post by the stretch roll.

Q27. And that is the part to which you refer on which the block was placed? A. Yes.

Q28. How soon after the machines were installed were these blocks put under these pieces that you refer to? A. Installed or in operation?

Q29. In operation? A. I could not state the exact time. It was within from 5 to 8 months.

Q30. What amount of pitch was used with these machines, obtained by the screw device, how high up were the breast rolls raised? A. To the highest point to my recollection was about 5 to 6 inches.

Q31. How high an adjustment was used in actually making the paper with these machines? A. It was adjusted at various heights at different times.

Q32. What was the highest to which it was adjusted and actually used from your recollection? A. As I said before, between 5 and 6 inches.

Q33. Now will you state to what extent this was used at the different heights, and how many changes were made during the early period of the use of the machines? A. I cannot state exactly and remember the different changes we made, for there was quite a lot of them, according to the weight of the paper, as I stated.

Q34. What about the speeds at which these machines were run during the early period? A. The speed varied from 110 feet to 340 feet or 350 feet per minute.

Q35. And when the higher speeds were used what was the adjustment? A. The more pitch we had to give to our wire.

Q36. When the lower speeds were used what did you do? A. We lowered our pitch.

Q37. When was it that you said you were away from the company, what years? A. Between 1903 and 1904, from 14 to 16 months.

Q38. Were these machines used with this pitch of 5 inches or more prior to the time when you were away for that period? A. Yes, sir.

Q39. And were those blocks put in before you went away? A. Yes, sir.

Q40. Was there ever any accident to this mill at Austin? A. Yes, sir.

Q41. What was that? A. The Austin dam above the mill broke in 1911, September 30th.

Q42. Did that injure either of these machines? A. It practically injured the whole No. 1 machine.

Q43. And what was done after the No. 1 machine was injured, was it rebuilt and put back in the mill? A. Yes, sir.

Q44. So that machine, the No. 1 machine, is not at the present time in exactly the condition in which it was originally installed? A. No, sir.

Q45. Was there any injury to the No. 2 machine? A. No.

Q46. Is the No. 2 machine in the same condition as when you first saw it in 1902? A. Yes, sir.

Q47. Has the number 2 machine any block under the center post over the suction boxes at the present time? A. Yes, sir.

Q48. Is that the original block that was put there by Mr. Anderson? A. Yes, sir.

Q49. And that was before you went away from the mill for the 16 months? A. Yes, sir.

Q50. Do you remember about how high that block is? A. I could not give the exact height of it. It is close to what I would say from between one inches to two inches to the best of

my recollection.

Q51. Which of these machines has ordinarily been run for the lighter weight paper, the No. 1 or No. 2? A. The No. 1 machine has been run longer on lighter weights than the No. 2. At a later period they were both on light weights.

Q52. Have there ever been wooden blocks put under the posts at the breast roll ends of these two machines? A. Yes, sir.

Q53. When was that done first? A. That was put under first in April of this year.

Q54. By whom was that done? A. By Scherrie.

Q55. Any blocks ever used under those posts prior to last April? A. Not to my knowledge.

Q56. Not when you have been employed there? A. No, sir.

Q57. What is the character of paper being made on these machines at the present time? A. Wrapping paper.

Q58. What is the particular character of paper that is being made on the No. 1 machine, what kind of finish? A. Water finish.

Q59. Will you explain briefly what is meant by water finish, how that is obtained, how that kind of finish is obtained? A. The finish is put on to calenders. At the calenders they have what is called a water box run on to the roll and the paper comes through and this water runs right up and it absorbs a certain amount of this water, and then it comes to what we call our finishing. We have hollow stack rolls in there with steam in. It acts the same purpose as ironing a piece of clothing, bringing the shiny surface out.

Q60. What is the effect of putting on this water finish on the speed of the machine? Can the machine run as fast when this kind of finish is being given to the paper? A. I do not understand what you mean.

Q61. As you are using this water finish on the paper, are you able to make the paper as fast as you would be if you were not putting on the water finish? A. Yes.

Q62. Does not make any difference with the speed? A. No, sir.

Q64. Do you know at what speed the No. 1 machine is being run at the present time? A. 380.

Q65. And that is the one that is making the water finish? A. Yes, sir.

Q66. What speed is the No. 2 machine running at at the present time? A. No. 2 machine is running at the present time 375 on water finish; on their dry finish they go a little faster.

Q67. That is the point I was asking you before. Do you run faster when making dry finish than when making water finish? A. Yes, sir.

Q68. That is the question that I intended to put to you before, whether when you make a dry finish, or whether when you make a water finish, you can run as fast as you can in making a dry finish? A. The water don't make any difference with the speed.

Q69. I understand you to say that on dry finish you run some faster? A. Yes.

Q70. About how much faster when making the dry finish than the water finish? A. Close to 25 feet.

Q71. 25 feet per minute? A. Yes, sir.

CROSS EXAMINATION.

By Mr. Lyman:

XQ72. Has the Bayless Company a mill at Binghamton as well as at Austin? A. Not that I know of.

XQ73. The one at Austin is the only mill of the Bayless Company as far as you know? A. To my knowledge.

XQ74. Three machines there? A. Yes.

XQ75. Two Horne machines and the third a patch-work of different kinds of machines? A. Yes, sir.

XQ76. When was that patch-work machine put in? A. It was installed during 1903.

XQ77. While you were there? A. Yes, sir.

XQ78. When did the Austin mill start running? A. Started running in March, 1902.

XQ79. And you were there at the very first, when the mill first began operation? A. No, sir.

XQ80. When did you go there? A. I went there in about two weeks after the first machine started.

XQ81. That was the No. 1 machine? A. No. 2 machine.

XQ82. The No. 1 was in place but had not been started up at that time? A. It was not quite completed. They were setting it up.

XQ83. Where did you go in 1903? A. I went down to Curtis Brothers, Newark, Delaware.

XQ84. In a paper mill there? A. Yes, sir.

XQ85. And when did you go with Curtis Brothers? A. I do not exactly recall the month now, along in the summer time.

XQ86. Summer of 1903? A. Yes.

XQ87. How long did you stay there? A. I stayed there about in the neighborhood of 8 to 9 months.

XQ88. When did you leave there? A. I left there in the spring of the year 1904.

XQ89. Spring of 1904? A. Yes, sir.

XQ90. And came directly back to the Bayless mill at Austin? A. No, sir.

XQ91. Where did you go from there? A. To Richwood, West Virginia.

XQ92. Paper mill there? A. No, not at that time.

XQ93. What were you doing at Richwood, West Virginia? A. Went there on a visit.

XQ94. How long did you stay there? A. If I remember it was the latter part of February, 1904.

XQ95. How long did you stay there? A. That is when I left there.

XQ96. When did you go there? A. I was there about three to four weeks. It must have been along in January.

XQ97. Then did you come directly back to Bayless' place from Richwood? A. Yes.

XQ98. So you got back to Bayless' place in February, 1904? A. Either February or March; would not answer as to the definite time.

XQ99. And have been continuously with the Bayless Company ever since. A. There was six or eight months at the time after the flood they were rebuilding that I did not work there for them.

XQ100. When was that? A. It was from September, 1911, until June, 1912.

XQ101. Where did you work at that time? A. I worked in Newark, Delaware, for awhile and I also went to the Cherry River Paper Company at Richwood, West Virginia.

XQ102. When you said a few minutes ago that you were away 16 months do you refer to the total time that you were away? A. Yes, sir.

XQ103. That is two periods? A. Yes, sir.

XQ104. Have you ever seen this model before? A. Never seen it before today.

XQ105. Now you say at sometime there was some blocking put in under that middle post. Was that done on both the No. 1 and No. 2 machines? A. Yes, sir.

XQ106. Same thickness of blocking in each machine? A. Nearest of my recollection, yes.

XQ107. What about that patch-work machine, when was that put in, that third machine? A. It was put in during 1903.

XQ108. Did that have an adjustment at the Fourdrinier end? A. No, sir.

XQ109. In that machine was the wire level? A. Practically, yes.

XQ110. And it has always been level? A. Yes.

XQ111. Did it run up-hill slightly, the wire in that machine? A. I never measured. If it does you can hardly take notice of it with the eye. It is practically on a level.

XQ112. Does that make the same grade of paper that the other machines do? A. No, sir. It makes the same grades but not the same weights.

XQ113. What grade of paper does that make? A. Wrapping paper.

XQ114. Is wrapping paper the only product of the Bayless mill? A. Yes, sir.

XQ115. And has been ever since you have been there? A. Yes.

XQ116. Never made anything but wrapping paper? A. No, sir.

XQ117. And what weight paper is made on the patch-work machine? You call that No. 3 machine A. Yes, sir.

XQ118. What weight paper is made on the No. 3 machine? A. Heavy weights.

XQ119. How heavy? A. About 24x36, 150 lb. That is on basis of water finish.

XQ120. What does that mean, 500 sheets of 24x36, weigh 150 lbs.? A. No, sir, 480 sheets.

XQ121. 480 sheets, 24x36, weigh 150 lbs.? A. Yes, sir.

XQ122. Does that always run on that weight? A. No.

XQ123. What weight has been made on that machine? A. There are 50 and 60.

XQ124. What do you call light weight? A. 38 and 40 lb.

XQ125. Do you call anything from 50 lb. up heavy weight? A. Yes.

XQ126. Take No. 1 and 2 machines, what weight paper are they running now? A. They run from 38 to 50.

XQ127. At the present time? A. Yes.

XQ128. Do you call those light weights? A. Yes.

XQ129. Have they ever run heavier weights than that? A. Yes.

XQ130. Both of them? A. Yes.

XQ131. What weights have they made in the past? A. They have made all weights up to 150, No. 2 machine has. No. 1 machine 90 lb. paper is the heaviest to my recollection.

XQ132. Is there any difference in the speed at which the machines were run according to the weight of paper? A. Yes.

XQ133. How does that vary, how does the speed vary? A. The lighter the paper the faster the machine runs.

XQ134. For the heaviest grade, say 150 lbs., how fast does

the machine run? A. In the neighborhood of 100 to 120 feet.

XQ135. And for the lightest weight sheets how fast does it run? A. We average about 380; sometimes we run slower and other times faster.

XQ136. That will be for the 38 lb.? A. Yes; on an average 380.

XQ137. Now, is there any difference, supposing you were running paper of the same weight on those three machines, would there be any difference in the speed at which the three machines would run; supposing you were running a weight of 50 lbs. on each of those three machines, would you run all at the same speed? A. We could not.

XQ138. Supposing you were running 50 lb. paper upon each of those machines, what speed would you give? A. No. 2 and 1 about 350; No. 3 machine 240, as fast as we can go.

XQ139. What is the width of No. 1 machine, width of the wire? A. 135 inches.

XQ140. And the trim is how much? A. 120 inch.

XQ141. What is the width of the wire on No. 2? A. 113 inches.

XQ142. What is the trim? A. 102 inches.

XQ143. What is the width of the wire on No. 3 machine? A. 66 inches.

XQ144. What does it trim? A. 59½ the widest.

XQ145. Speeds at which you run depend entirely upon the weights of the paper? A. Yes, sir.

XQ146. Now do you use different grades of stock for different weights of paper? A. All we have used is the hemlock sulphite and old newspapers in making all grades.

XQ147. Has there been any change in the stock used since 1902 there? A. Yes, sir.

XQ148. What stock was being used in 1902? A. In 1902 they used all hemlock sulphite.

XQ149. And then at sometime since then they began to use old newspapers? A. Old news and ground wood.

XQ150. When did they begin to use old news? A. I could not give the exact date, in the past three or four years.

XQ151. When you say "ground wood" do you mean hemlock sulphite? A. No, that is spruce wood.

XQ152. When did you begin to use that? A. They have used a little at various times in the last eight years, maybe longer, I do not exactly remember that.

XQ153. Do you know what I mean by a quick stock or slow stock? A. I know what you mean by a free stock or slow stock.

XQ154. Is the hemlock sulphite freer stock than the ground wood or not? A. Yes, it is freer.

XQ155. How about the stock in which the old newspapers is mixed, is that slower than hemlock sulphite? A. All old news stock is slower than all hemlock is.

XQ156. You say that in 1911 there was a flood and the No. 1 machine was damaged by the flood? A. Yes, sir.

XQ157. No. 2 machine was left just as it was before? A. Yes.

XQ158. What changes had to be made in the No. 1 machine? A. I could not tell what all changes was made in that, a good many of them.

XQ159. What ones do you remember being made? A. In what part of the machine?

XQ160. In any part of the machine? A. There were additions of driers on to it, they all had to be re-set, calender stacks had to be re-set and some parts on the Fourdrinier had to be fixed.

XQ161. What changes had to be made on the Fourdrinier? A. Well, the post, the middle post was damaged, and the couch was damaged, but the breast roll was the same as it was.

XQ162. What change was made on the middle post when you set it up again, or fixed it up after the flood? A. They got a new post. The other was damaged so they could not use it.

XQ163. When they rebuilt it after the flood did they put any blocking under that second post? A. No, sir.

XQ164. Was the post the same length as the previous one? A. I could not say as to that.

XQ165. Is it possible to raise the breast roll on that No. 1 machine to the same expanse as possible to raise the breast roll on the No. 2 machine? A. Yes, sir.

XQ166. How do you avoid that bend or break in the pitch at the joint between the vertical section and the suction box section on the No. 1 machine if there is no blocking on the middle post on the No. 1 machine? A. Set in there on a slant to make straight draw, and the rails from the post to the couch are on a slant.

XQ167. How much of a slant has the rails? A. I could not say. I never measured it.

XQ168. What is the nature of these blocks underneath the central post, were they made of iron or wood? A. Made of wood.

XQ169. Same blocks have stayed there all along, of wood? A. On the No. 2 machine, yes, sir.

XQ170. The same identical blocks that were put there first?

A. Yes, sir, and it is my recollection I never remember their being taken out.

XQ171. Now you say that some blocking was put under the standard of the machine at the breast roll end in April of this year? A. Yes.

XQ172. Was that done to both 1 and 2 machines? A. No

XQ173. Which machine was that done to? A. No. 1.

XQ174. None under the number 2? A. No

XQ175. What was the thickness of the block put under the No. 1 machine at the breast roll end in April of this year? A. Pretty close to four inches.

XQ176. What was the reason for that? A. We wanted to raise her pitch up.

XQ177. Why? A. Speeded up the machine for the formation of the sheet. Really the reason we put that under that was to make a quick job of it. We could do it quicker than we could raise the breast with the screw adjustment. We did that on a Sunday, and the reason we put the blocks under was to get a quicker job, to get home sooner, but we could have got the same kind of pitch by using our adjustment.

XQ178. When that blocking is under does that give the breast roll an elevation of four inches above the level, or more or less? A. Why, it gives it four inches more than what we had.

XQ179. What did you have at the time that was put under? A. I could not say the exact number of inches.

XQ180. To your best recollection how much was it? A. Most five inches, four or five.

XQ181. So that you have now a nine inch downward pitch on that machine? A. No, sir, I do not think so. I have never measured it. I would not say what the pitch is. This block has been re-cut down since April.

XQ182. To what was it cut down? A. Close to two inches.

XQ183. What pitch do you think you have there now? A. Where do you want your pitch to begin from?

XQ184. I mean how much is the breast roll, the top of the breast roll, above the top of the guide roll? A. I never measured it, but I would say it must be close to 6 or 7 inches. It may be a little more or may be a little less.

XQ185. When did you cut those blocks down from 4 inches to 2 inches? A. I do not remember the exact date, 6 to 8 weeks ago.

XQ186. Why did you cut them down? A. We did not want quite as much pitch. We slowed our machine back.

XQ187. When you put that blocking under in April, 1917,

was the breast roll at the highest point to which it could be elevated by the adjustment provided by the machine? A. No, sir.

XQ188. How much more could you have gotten by the adjustment? A. I could not say.

XQ189. How much do you think? A. We could have got four inches, probably more. I would not exactly say; 4 inches more or less.

XQ190. What was the total amount of the adjustment that you could get by that mechanism that was provided with the machine? A. I do not know the given amount.

XQ191. I think you said 5 or 6 inches? A. I did not say. I said that was what we had been running at.

XQ192. What was the extreme height that you could get by the adjustment that was given on the machine itself? A. I don't know.

XQ193. When you said you had been running it at 5 or 6 inches what did you mean? A. The height we had been running the machine at, the pitch.

XQ194. Recently? A. At that time, 1902, when we raised it up, and it has been run lower, and the same thing since at various times. The pitch has been changed.

XQ195. You mean you do not know whether you could get as much as 5 or 6 inches by that adjustment, or you do not know whether you could get more than that? A. We could get more, but I do not know how much more than we had. We had between 5 and 6 inches on it.

XQ196. Did you ever measure it? A. No.

XQ197. Can you explain to me how you know that you could have gotten an additional 4 inches over what you had when you put on this blocking in April, 1917? A. Because we was not clear up in the slot on our post.

XQ198. Can you show me that slot on the post on this model? A. Yes, sir.

XQ199. Let us see it, please? A. See your slot in there? (referring to model).

XQ200. How much more could you have gotten, how much more clearance was there in the slot on the post? A. I could not say. This part will raise up as high as your slot is, but you cannot go higher than the top of the slot.

XQ201. Did you ever raise it higher than the top of the slot? A. No, sir, not to my recollection.

XQ202. When you say you can go that high, you are just speculating, you do not know, do you? A. What is going to keep it from going? Working that long screw it is run right up

(referring to model).

XQ203. Did you ever see that screw in there (referring to model)? A. No, not in there.

XQ204. Do you know the length of the thread on that screw? A. No.

XQ205. You know nothing about the construction of the post inside this hollow standard? A. Not much.

XQ206. Never saw it? A. Never saw it on the inside.

XQ207. There is no blocking under the breast roll end of the No. 2 machine? A. No, sir.

XQ208. What is the elevation of the breast roll above the level of the guide roll on the No. 2 machine at the present time? A. Must be close to 5 inches, but I never measured these pitches, so it would be awful hard for me to give the exact pitch.

XQ209. How often has the pitch been changed? A. Since when?

XQ210. Well, during the whole period that you have been testifying about? A. I could not tell you how many times it has been changed.

XQ211. How many times in the course of a year, would it be changed once? A. Maybe some years not at all, and other years maybe changed two or three times.

XQ212. Now does that adjustment that is provided there provide for running the breast roll below the level as well as above the level? A. I think it does.

XQ213. And has it ever been run that way? A. Not very much; practically it was just about on a level.

XQ214. It has sometimes been run up-hill? A. I could not answer that whether it has or not. I know it has been down on the level.

XQ215. For what grade of paper was it run down on the level? A. Heavy weights.

XQ216, What speeds? A. Slow speeds.

XQ217. How slow? A. Whatever they needed for the weight of paper. Real heavy paper would be about 120 to 125 or may be 150.

XQ218. During most of the time since this machine has been in has your breast roll been elevated above the level? A. Above most of the time.

XQ219. And most of the time has it been extreme high pitch to which it could be raised or less? A. I never seen it to what I thought was extreme height.

XQ220. What is the height at which according to your estimate it has been run at most of the time? A. Take it on an average straight through along between 4 and 5 inches.

XQ221. Has it ever been run higher than that? A. Yes, sir.

XQ222. Now you are talking about both the No. 1 and No. 2 machines? A. Yes.

XQ223. What is the depth of the pond you have carried in these machines behind the slices? A. Various depths. On an average they are about 3 to 4 inches.

XQ224. What is the highest pond that you have ever used there? A. I could not state the highest for I never measured when we had the most water in.

XQ225. What is the height of the slices? A. About 6 inches.

XQ226. And you can carry a pond 6 inches deep, can you? A. You can carry it higher than that if you wanted to.

XQ227. How high? A. I could not state. These slices are adjustable. You can raise your slices and let more out from underneath, and then you still have the width of the slices you can back up.

XQ228. Have you carried a depth in your pond of 6 or 7 inches at times? A. I could not say.

XQ229. You may or may not? A. May or may not, I could not say.

XQ230. Did you ever get a depth of lower than 3 or 4 inches? A. Yes.

XQ231. What is the lowest? A. Probably 2 inches.

XQ232. What causes the depth of that pond to vary? A. You regulate the pond according to the grade of paper you run for the formation of the sheet.

XQ233. Do you use a deeper pond for heavier paper? A. No.

XQ234. Do you use a deeper pond for lighter paper? A. Yes.

XQ235. For what weight paper would you use a pond of 2 inches depth? A. Heaviest grade we make.

XQ236. 150 lb.? A. Yes.

XQ237. What depth pond would you use for the 38 lb. paper? A. That varies according to our stock, whether free or slow. Slow stock you do not use as much water as on free stock.

XQ238. Do you vary the height of the breast roll also according to the grade of the stock, whether it is free or slow? A. No, not all the times, no.

XQ239. Do you any of the times? A. Not for the free and slow stock, no.

XQ240. Does your stock vary from time to time as regards

freeness or slowness? A. Yes, sir.

XQ241. How does it vary, according to the season of the year? A. No, according to the adjustment of the jordens.

XQ242. You could get any depth of pond that you wanted on those machines, could you? A. Yes, sir.

XQ243. Up to what amount probably as a maximum? A. Well, that would be according to how much water we could get pumped up, would be the height. The highest I could not say.

XQ244. Get as much as 8 inches if you wanted? A. No, I do not believe you could.

XQ245. Get as much as 7 inches? A. In the neighborhood of 6 or 7 inches. There are various other things connected with that to get the depth of the pond.

XQ246. What? A. The amount of water you can get pumped up to your mixing box.

XQ247. Has there been any increase in speed of your machines in the last few years? A. Yes.

XQ248. When did those increases come? A. Why, they have been coming ever since the mill has been in operation; trying to get out the larger production would have to keep speeding the machine.

XQ249. When did the last increase in speed come? A. During this year sometime.

XQ250. First part of the year? A. No. March or April, along in there.

XQ251. What was the speed before that change came? A. 350.

XQ252. What is the speed since? A. About 380 average speed; sometimes faster and sometimes slower, that is on No. 1 machine I am speaking now.

XQ253. How about No. 2 machine? A. No. 2 machine the speed will average 375, she goes faster and slower.

XQ254. Was there an increase in speed on No. 2 machine? A. Yes, sir.

XQ255. Was there an increase in speed on No. 2 machine at the same time the speed on No. 1 was increased from 350 to 380? A. Along close to that time.

XQ256. That was a few months ago? A. Yes.

XQ257. Prior to that time the best speed either machine made was 350? A. Yes.

XQ258. Now think back, please, to the condition prevailing before these changes were made and tell me, if you can, about when the speed was increased to 350? A. It was increased along in 1916, I could not say exactly what month.

XQ259. What had it been before that increase? A. 325.

XQ260. For both machines, No. 1 and No. 2? A. Yes, sir.

XQ261. Prior to 1916 the best speed had been 325. Now think back once more to the period before 1916 and tell me, if you can, about when the speed was increased to 325? A. There was a time we speeded up there maybe for a month or two months before, then we would have to slow back, from the time the mill was first in operation.

XQ262. I am asking about the speed you could maintain as a steady thing, and I take it since 1916 you have been able to run at 325 as a steady thing? A. We are running 380 now on average speed.

XQ263. Since 1916 you have been able to run 325 or better? A. We never had it up faster than that before that to my recollection for any length of time.

XQ264. Prior to that increase in 1916, which brought the speed up to 325, what had the machines been running at? A. I could not say what the average was. Where a machine was running good we would give it more speed, when it got up what we called "in the air" we would slow back down to where she would run safe.

XQ265. You said there was a speed increase in 1916 that brought it up to 325, safe, regular speed, what I am asking now is what the speed was before that increase, what the best safe speed was before that that you had been able to maintain? A. 300, close to 390.

XQ266. And when do you think it was that you got up to 300 as a regular safe speed? A. Along in 1904 to 1905.

XQ267. You had been running practically with no changes in speed from the year 1904 or 1905 up to 1916? A. Not for a steady thing. The chances are we would go up a little and then we would go back down a little.

XQ268. Had there been a steady increase in speed from 1904 up to 1916? A. Yes. We would try it and if we could not make it go we would have to go back the other way to make it safe.

XQ269. Had the production that you had gotten off those machines been increasing from year to year from the year 1904 or 1905 up to 1916? A. The production had been increasing.

XQ270. That means the average speed had been increasing? A. Not necessarily; according to the weight of your paper.

XQ271. As a matter of fact had the average speed been increasing from 1904 or 1905 up to 1916? A. I would say yes, increasing a little.

XQ272. What was the amount of that increase that took place between 1904 or 1905 and 1916, a matter of 50 feet a min-

ute? A. No.

XQ273. A matter of 25 feet per minute? A. No, I could not say as that much. I could not exactly answer that question how many number of feet per minute.

XQ274. Do you keep any record of the machines speed? A. No.

XQ275. Have you ever kept any records? A. No.

XQ276. The mill has not kept any records? A. Not to my knowledge.

XQ277. Were you there when that blocking was put under the second post of the machine? A. Yes, sir.

XQ278. Now, when do you think that was put in? A. Along the latter part of 1902.

XQ279. What other men have been employed on those machines since 1902? A. In what positions?

XQ280. In any position? A. Quite a number on the machines.

XQ281. Name them, if you will, and tell about when these different men were there? A. There has been so many changes it would be hard to give them all now.

XQ281a. Give as many as you can? A. If I remember right, a fellow by the name of Jack Cunningham started the machine on one tour and Lewis T. Ritchie on the other.

XQ282. That was in 1902? A. Yes, sir.

XQ283. How long did they continue? A. I could not exactly give the length of time. They were not there so awful long. They were there for awhile, what they call "tramp" paper makers, there three or four weeks.

XQ284. You mean they both left in 1902? A. Cunningham did. I could not say as to the other fellow.

XQ285. Who took Cunningham's place? A. I don't recall.

XQ286. Tell us all the men who have been machine tenders on No. 1 machine that you can remember? A. Howard Anderson, Tommy Licetle, Frank McCloskey. Those first two fellows were on No. 2 machine, Ritchie and Cunningham was. Then you changed off and asked me about No. 1 machine. Frank Kendell, Joe Naughtriep, Charlie Cadden, Gordon Hill. It is hard to recall the names of those fellows. A fellow by the name of Whiteman, I don't know his given name. The fellow running it at present is named Hiram Hackett, and Andrew Wold. I run the machine awhile myself. That is all I can call to mind just now. May be a little later on I could think of more.

XQ287. Now what about the men that worked on the No. 2 machine, give us a list of them please? A. You have two of

them there, Cunningham and Ritchie, and there was Andy Oldfield and George Newcomb, Leo Smith, Henry Watters, Jim McCloskey, Theodore Adams and Chester Sipe. That is about all I can recall now.

XQ288. Are any of those men employed by the Bayless Company now? A. Some of them, yes.

XQ289. Which ones are employed by the Bayless Company? A. Hiram Hackett, Andrew Wold, George Newcomb and Leo Smith.

XQ290. That is all? A. Yes.

XQ291. Do you know where any of these other men are? A. No, sir. Well, I do too, I know where Lewis Ritchie is.

XQ292. Where is he? A. He is in Richwood, West Virginia.

XQ293. Any others? A. No.

XQ294. Referring to these machines, No. 1 and No. 2, what means was provided for adjusting the flow box or the apron to correspond with the different elevations of the breast roll? A. We would raise and lower the apron board.

XQ295. Can you show on that blue print how you did it? A. There is your head box. This line coming out here on to the breast roll is to represent your apron board as I take it there.

XQ296. Now how would you raise or lower the flow box? A. This apron board is set in here on blocks. You could move your blocks to raise your apron board up, adjust them, raise them up higher and fasten the blocks on again.

XQ297. Did you change those blocks every time you moved the breast roll? A. No.

XQ298. Did you ever change them? A. Yes.

XQ299. When did you have to change them? A. When we would bring our breast roll up to the apron board. If we had to go higher you would change your apron board.

XQ300. How much could you raise the breast roll without raising your apron board? A. That would be from the height where we left it the last time. What I mean by that, if we were up to our apron board now and wanted to get more pitch, we would have to bring our apron board up, but we would bring it up so it would be from two inches to three inches higher than we would go with the breast roll.

XQ301. When you have a heavier paper you have to have a thicker stream of stock going on the wire than when you have a light paper, do you? A. Be more stock, yes, sir.

XQ302. That is, you raise the slices when you have a thicker stock? A. No.

XQ303. You get a thicker stream of stock entering the wire when making heavy weight paper than when you do light paper? A. We have more stock going on to the wire, yes.

XQ304. How do you get that thicker stream when you are going to make a heavier paper? A. They have a regulating gate that opens it up wider.

XQ305. Open what wider? A. The regulating gate. All that comes through screens goes out on to the wire.

XQ306. What it amounts to then, when you want to get a heavier paper you force more stock into the flow box and raise the head in that flow box? A. No, sir.

XQ307. How do you get any bigger stream then? A. The heavier the paper the slower your machine has got to run. Your stock is flowing out here on to your wire. The faster the wire is running the thinner the sheet will be, the wire running slow it will be thicker.

XQ308. When were those blocks put under the apron board, is that what you said? A. I said there was blocks under it.

XQ309. When were the blocks put under the apron board? A. When the machine was installed.

XQ310. How high could that apron be raised by blocks without changing the position of the flow box? A. I could not say any given height. That is, either take it on the level or take it from the present position?

XQ311. Take it on a level. A. Could raise it to give you enough pitch for 11 or 12 inches if you wanted it.

XQ312. How high could you raise it without moving the flow box from the position in which it was originally set? A. You could come up 15 inches.

XQ313. Please look at this blue print. I show you a line which you said represented the apron. Now how can you raise that apron without raising the flow box? A. You said without putting blocks under the flow box?

XQ314. Yes. A. You can put pieces here up to the height of them screens.

XQ315. Did you? A. No, sir. You asked if we could do that.

XQ316. You say that the flow box has not been blocked up? A. The flow box was blocked up at the same time the breast roll was, in April, 1917.

XQ317. Now before April, 1917, the flow box was not raised at all? A. No.

XQ318. Was it built up at all at the top? A. Yes, strips put around the top.

XQ319. How many strips were put around the top? A. I

could not say.

XQ320. When were those put around the top of the flow box? A. I could not say what year the strips were put around. When we raised our breast roll we would have to raise our apron board.

XQ321. Now could you raise the apron board without putting those strips on top of the flow box? A. Yes.

XQ322. How much could you raise the apron board without putting the strips on top of the flow box? A. Six inches.

XQ323. Does it show on this drawing that you could raise the apron six inches, or any distance at all, without putting strips on top of your flow box, or blocking up your flow box? A. You could raise that up there. If you raise that apron here this is the top of your head box. If you raise that clear to the top it would come here.

XQ324. Take the flow box position, and the position of the apron, just as shown on this drawing, how much could you raise the apron and still have the machine work properly without either raising the flow box or putting the strips on top of the flow box? A. You could raise your apron board within 2 to 3 inches of the top of your flow box.

XQ325. Well, how far would that be? A. I don't know the given height they are now.

XQ326. Tell me in your best judgment how high you could raise that apron and have your machine operate without touching your flow box, I mean without changing the position of the flow box or building up the flow box by strips? A. You could go from, on a level to 6 or 7 inches anyway.

XQ327. Now, at some time there were strips put on top of the flow box? A. I have seen them, yes.

XQ328. Are they there now? A. No.

XQ329. When were they put on? A. On the old flow boxes.

XQ330. You have had new flow boxes put in? A. Yes.

XQ331. When? A. During 1912.

XQ332. When were those strips put on the old flow boxes, do you remember? A. I could not say what year.

XQ333. During 1916? A. I could not say. It has been longer than that. I could not say what year.

XQ334. Within two or three years? A. I could not answer that question for I do not know.

RE-DIRECT EXAMINATION.

By Mr. Paul:

RDQ334a. You notice on this model it shows a metal bar running across on top of the wooden board connecting the rear posts and another one connecting the middle post. Are

there such bars on the machine? A. No, sir, there is not.

RE-CROSS EXAMINATION.

By Mr. Lyman:

RXQ335. How high are the slices on these machines, 1 and 2? A. From 6 to 8 inches.

RXQ336. Are you sure of that? A. Yes.

RXQ337. Ever measured it? A. Never measured it.

RE-DIRECT EXAMINATION.

By Mr. Paul:

RDQ338. May they be more than 6 or 8 inches? A. That is pretty hard to answer, never having measured it. They may be more or may be less. In my opinion they are from 6 to 8 inches.

RE-CROSS EXAMINATION.

By Mr. Lyman:

RXQ339. The slices are these parts that I mark on Exhibit V, are they? A. Those are the slices.

RXQ340. Can't you regulate the depth of the pond behind the slices by regulating the slice opening? A. Why, you could, yes.

RXQ341. Don't you ever do that? A. I do not thoroughly understand. I will say if you were changing the deckle, making a narrow cutting, there would be a narrow space there and with the same amount of water and stock coming in it would naturally back up where if you did not shut out water or stock.

RXQ342. What is the average height of the slice opening? A. It has various heights at different times.

RXQ343. Between what limits does that vary? A. I see them run on machines from almost down up to 3 inches.

RXQ344. 3 inches? A. From 2 to 3 inches.

RXQ345. When do you use the slice opening with 2½ or 3 inches height? A. When you are carrying a lot of water in the machine.

RXQ346. When you are making heavy paper or light paper? A. Light paper.

RXQ347. When you want to make heavy paper you shut down the slices so that it leaves a narrow opening? A. Yes.

RXQ348. Does that increase the depth of the pond? A. Yes.

RXQ349. So that you can, by regulating that opening, carry any amount of head that you choose to carry? A. Yes, sir.

Deposition closed.

Signature waived.

Adjourned until 2 p. m., same date.

Nov. 23, 1917, 2 p. m.

JOHN ANDERSON,

a witness called on behalf of the defendant, being first duly sworn, deposes and says in answer to questions by Mr. Paul, as follows:

Q1. What is your full name? A. John N. Anderson.

Q2. Where do you reside? A. I am at present residing at Ticonderoga, New York. My family is in Glens Falls.

Q3. What is your occupation? A. Employed up there as assistant superintendent.

Q4. In what? A. The manufacture of paper by the International Paper Company.

Q5. Were you ever in the employ of the Bayless Manufacturing Company? A. I was in the employ of the Bayless Manufacturing Company after the reorganization after the flood, and prior to it I was employed for ten and one-half years by the Bayless Pulp and Paper Company, known as the Bayless Pulp and Paper Company.

Q6. Where were you employed? A. I was paper mill superintendent for Mr. Bayless.

Q7. Where? A. At Austin, Pennsylvania.

Q8. When did you begin work at Austin? A. February, I cannot tell the exact date, 1902.

Q9. How long had that mill been up at that time? (No answer.)

Q10. How long had that mill been up at that time? A. Why, it was just a new mill being built and was not in operation. In fact they had one machine installed and the other was installed at that time.

Q11. How many paper machines were there in that mill? A. Why, at that time there was one complete, ready to run, and the second one under erection. After that they had three. They brought an old one from Binghamton.

Q12. What make were those first two machines? A. J. H. Horne Sons.

Q13. All three were Fourdrinier machines? A. All three were. The third machine is not a Horne machine, an old mixture of Rice-Barton and Black and Clawson.

Q14. Referring now to the Horne machines, what were the sizes of those machines? A. One was 136 and the other 114.

Q15. Were those also known by numbers? A. Yes.

Q16. What were the numbers? A. 1, 2 and 3; big machine was No. 1, No. 2 was the second Horne machine, that was 114.

Q17. And the No. 3? A. Was the old machine that was

taken from Binghamton down.

Q18. Which of the Horne machines was installed first? A The No. 2 machine.

Q19. That you say was installed at the time you went there? A. It was installed but was not speeded up, quite a lot of little adjustments. You know a new mill it takes about a month after you are ready to get really ready.

Q20. How soon after you went there was the No. 1 ready for operation? A. That I could not tell you the exact date, but the man was there, the engineer, and near as I can figure we started six weeks after the No. 2.

Q21. Both started in 1902? A. Yes, either early part of May or latter part of April, I cannot say which. This No. 2 machine started, I think, to make paper in March. I know it did. Those dates, they have the records at the mill, but of course I do not remember them.

Q22. What, if any, means was provided on that machine for adjusting the breast roll? A. This screw here at the end of the breast roll.

Q23. You are referring to the model before you marked Exhibit V-1? A. Yes.

Q24. I ask you to refer to the blue print marked Defendant's Exhibit V, and to examine the same and state whether it does not show the arrangement of the parts of the Fourdrinier ends of these Horne machines? A. Yes.

Q25. Is that a correct drawing of those machines? A. That is a correct drawing.

Q26. So far as the side elevation is concerned, were the two machines substantially alike, No. 1 and 2? A. Yes, practically the same thing, only difference was in the width of the machine.

Q27. What kind of paper was made on those paper machines when you began there? A. We started them on hemlock fiber paper, wrapping paper, 100% sulphite stock.

Q28. What adjustment did you give to the wire in the operation of those machines, beginning from the time you went there and continuing for the number of years? A. In the start this machine here was run level.

Q29. Which machine do you refer to? A. The No. 1.

Q30. Is this a blue print of the No. 1 machine? A. It is similar, just the same, side views are practically the same.

Q31. No. 1 machine was run level at the start? A. Yes.

Q32. And the No. 2? A. No. 2 was always run level until we got on the lighter weights.

Q33. Go on and describe just what you did in the use of the adjustment, in reference to the adjustments on these machines,

and for what purpose you made any change? A. When we started this mill we had a basis of paper that run from 40-lb. on the light weight up to as high as 150 heavy, so we started the No. 2, and we found according to our orders that we did not turn out the light weight fast enough, and the bigger machine being better adapted we transferred all the light weight paper to the No. 1 machine. Then after we had gotten systemized down to business and begin to speed this machine up, we elevated this machine to about a 5-inch pitch and run it right around to 360 and 375 on 40 lb.

Q34. Please describe how you got the pitch on the machine? A. We got it with this screw here.

Q35. Screw shown on this drawing? A. Yes, sir.

Q36. Will you put a letter on the screw if you wish to mark it? A. This rail that extends through here comes up here and the breast roll is fastened in here by a nut on this screw, on either side, and we run it up by the shaft that extends across here as we needed it.

Q37. How much adjustment, what is the greatest elevation that you ever used with that machine? A. At that speed five inches was as high as I went with it. That was all that was necessary. If I had gone 50 feet faster I would have had to gone up two inches more.

Q38. You did go up five inches with this screw? A. Yes.

Q39. And did do that? A. Yes.

Q40. How soon after you began using the machine in 1902 did you use this 5-inch adjustment? A. I should say we had run a couple of months or longer, eight or ten weeks. We got straightened out and the men placed and adjusted.

Q41. Now, by giving this adjustment of five inches to the breast roll, how far did you pitch your wire down towards the other end of the machine? A. That would be from level here to five inches here.

Q42. From level where? A. Here at this break here, and what is known as the shake rail. That allows this to shake and your boxes remain stationary. Of course this part don't come up.

Q43. What part do you mean? A. There is a break in the shake rail on all machines. This is a break here. There is a knuckle there that allows the table rolls to shake and your boxes remain stationary.

Q45. Did you do anything in reference to this part of the machine by the suction boxes when you adjusted the breast roll? A. Yes.

Q46. What did you do? A. I blocked up here 1½ inches.

Q47. When you say "here," what do you mean? A. I mean by this pedestal here where the shake rail and suction rails is divided.

Q48. Where did you place this block? A. Under the pedestal here.

Q49. What was the effect of that? A. It was blocked according to figures to give this necessary incline to the guide roll so this wire would be in a straight line when you put it up, or otherwise a perfect graduation.

Q50. Now, will you explain under what conditions you elevated the breast roll so as to give the pitch to which you have referred? A. Well, now do you mean for what cause I elevated?

Q51. What the conditions were that caused you to raise the roll? A. The conditions required more speed on the machine in order to get the production, and the pitch was put on to allow the water to go down the machine farther so that the sheet would be closed better.

Q52. With what weight of paper would you use the elevated breast roll? A. 40 lb., the light weights.

Q53. To what extent was the breast roll used in the elevated position and with the blocking under the pedestal during the time that elapsed between the starting of the machine and the time of the flood which has been spoken of in the testimony here? A. It was used continuously with the pitch on after we concluded to make with the light weight machine, and make all our light weight papers on No. 1.

Q54. Any change in the pitch used on that machine during that time? A. No. We kept it up because it was not necessary. We did not run it any faster than 375, kept on that weight paper day in and day out and year in and year out.

Q55. The No. 2 machine, what was the practice with that? A. That machine was run level when I was there because that machine took the paper from the light weights and went down to the heavy. Her speed was right around 250, from 112 up to 250. She run slow, made the extreme heavy weights.

Q56. At that time was that run on an elevation while you were there? A. No, I never run that elevated while I was there because I had the heavy weight paper on it.

Q57. Were you there at the time of the flood? A. Yes.

Q58. Do you remember when that occurred? A. September 30, 1911, I think.

Q59. What happened to the No. 1 machine at that time? A. The No. 1 machine was completely ruined, knocked down and driers torn off.

Q60. Was the machine rebuilt after the flood? A. Yes, remodeled and more driers put on and improved considerably.

Q61. When was that completed so as to put it in operation? A. The mill started up on June 20th after the flood on September 30th the year before.

Q62. In the operation of the No. 1 machine, what amount of head did you carry on the back of the slices? A. We had about a 6-inch flow or 6-inch depth in the apron, as we call it. That is stock on the apron and on the breast roll also.

Q63. Was that varied from time to time? A. Depth of the flow was not varied, but it was necessary in putting that pitch up to build that box a little higher so as to raise the flow whatever you put this up, so that left this. There was about three inches more that you could go up further if you wanted to, but we always left it that way. This represents the head box. You see when you come up with this you necessarily would not want to drag your apron. You would build this upon the box and make this flow come out a little higher but would not disturb the depth of the flow in your apron. It would be the same.

CROSS EXAMINATION.

By Mr. Lyman:

XQ64. When did you build up that flow box? A. When I put that pitch up.

XQ65. That was in 1902? A. Yes.

XQ66. How much did you build up the sides of the flow box? A. I first built it up about six inches, but always did have about two inches clearance. We come up five and I raised that head six, just built that little box up in front of the breast roll. This rail is designated as an adjustable shake rail, that is in the business, that is it can be operated while the machine is in motion.

XQ67. Did I understand that the flow box was raised bodily at all? A. No, the flow box was not disturbed, that is bodily, that is just that section of it.

(No questions 68 and 69.)

XQ70. What you did to that was to put something on top of the slices to increase their height? A. Just the same as this in here. In order to elevate it it was necessary to build your head box up accordingly.

XQ71. What means did you use to build up the head box? A. We took 1½" pine, I think those boxes are built of, just cut two or three-inch pieces, and put across there and built up and put our apron board on to them. That built it up six inches higher and allowed your flow to come up.

XQ72. What was the height of the slices on the machines,

how high above the wire was the bottom of the slices? A. We used two slices there at that time. I would say the first slice was ¾" and the second slice about ⅜".

XQ73. And how high were the slices themselves, what is the depth of the slice? A. I never measured but I think a standard slice is about eight inches.

XQ74. You used two slices in those times? A. Yes.

XQ75. And later on you used one slice only? A. Yes, we used on the light paper some times, if it cut free we would use one slice and if extremely slow we would use two.

XQ76. Do you mean that the two slices were abandoned and one slice only used later on? A. We used them as necessity required it.

XQ77. At the present time, so far as you know, there are two slices? A. Yes, so far as I know. I do not know what they have. We have run it both ways, one and two slices, just as it was necessary.

XQ78. When that machine was rebuilt in 1911, what was done with it with regard to the matter of elevation of the breast roll? A. It was put back to start just the same as it originally had been. Those blocks and everything was left under there, under this pedestal.

XQ79. Is that blocking under that central pedestal today under that No. 1 machine? A. Of course I have not been there in six years, but I think it is.

XQ80. What is the thickness of that blocking? A. About 1½ inches.

XQ81. The No. 2 was always run level during your connection with the company? A. Yes.

XQ82. When you rebuilt the No. 1 machine in 1911, did you have to put in a new flow box? A. No, that part of the machine was all right.

XQ83. There was no change made at the breast roll end? A. No, we just cleaned that up. It knocked the couch roll off, from the couch roll clear on down, but the upper end screens and all remained in.

XQ84. But the central posts, supporting the end of the suction box section under your blocking, was not disturbed at all? A. No.

XQ85. The suction box section itself was not disturbed at all? A. No.

XQ86. Breast roll had same elevation as before? A. Same elevation.

XQ87. During your connection with the company, was ever any change made in the elevation of the breast roll on No. 1

machine or always run at the same height? A. Always run at the same height. Possibly we would make an order of 50 or 60 lb. and we would have to slow down and have to lower it a little. On the 40 lb. always remained the same.

XQ88. During that period of time between what limits did the speed which was maintained on the No. 1 machine vary? A. I should say some times we put on the wire and not force it until the paper got dried out we might slow down to 340. After we got straightened away put it back up to normal speed.

XQ89. What was normal speed? A. Around 360 to 375.

XQ90. And it did not vary? A. No, we run that paper year in and year out.

XQ91. Did you ever get a higher head than six inches in the flow box? A. Sometimes conditions in stock would change and the flow would build up possibly half an inch. The apron would not carry eight inches.

XQ92. What was done on the No. 3 machine during this period of your connection with the company? A. That machine was an old machine. We made all our heavy weights, that is heavier than 112, and that stuff; 90 lb. was the lowest we made on that. That machine run level or half an inch below. That is, the breast roll was half an inch below on that machine.

XQ93. Running up hill? A. Yes. That was to assist in letting the water out of the heavy paper.

XQ94. Now, on this adjustment that was provided in the No. 1 and No. 2 machines, was it possible to depress the breast roll below the level? A. Yes, you could go down one inch below as I remember. I think No. 2 machine run possibly half an inch below, or something like that.

XQ95. Run with the breast roll half an inch below? A. Yes.

XQ96. Do you remember whether No. 1 ever run with the breast roll below the level? A. No, you could do that with it but it was not necessary. It was what we called our fast machine.

XQ97. The idea of this adjustment which gives the up hill, which drove the wire up hill, so to speak, was to take care of slow stocks? A. Slow stocks and heavy weights.

XQ98. Give the stock a longer time on the wire? A. A longer time on the wire, that is, to let the water get out down close to the breast roll instead of forcing it down on the incline.

XQ99. And the idea of the downward inclination on the light weights was to carry the water farther down to the dandy and to allow you to run faster? A. You could not close a sheet of paper with 5-inch pitch under 350, because this wire has got

to travel fast enough to take that away. If you run slow this head that you got back here would wind your stock. In order to make that sheet smooth you have to go fast. That is the idea of the pitch on all machines.

XQ100. It was a matter of drainage of the stock? A. Yes.

XQ101. When did you leave the employ of the Bayless Company? A. I do not know when I did resign. I know I stayed there and started the mill up June 20th, and I think I was there two months after that, and I got a position in New Hampshire.

XQ102. You were there continuously from 1902 until 1912? A. From February, 1902, until July, 1912.

XQ103. Had you ever worked for the Bayless Company prior to that? A. Never had.

XQ104. Had they had a mill at Binghamton prior to that time? A. Yes, they had a mill in this city.

XQ105. And were you familiar with that mill? A. No, never was in it.

XQ106. Where did you go in New Hampshire? A. Odell Manufacturing Company.

XQ106. Where is that? A. Groveton.

XQ107. How long were you there? A. Three years.

XQ108. Until 1915? A. Yes.

XQ109. Then where did you go? A. With the Henry Paper Company about eight or nine months and I have been with the International since March 23, 1916; with them two years next March.

XQ110. Where is the Henry Manufacturing Company located? A. At Lincoln, New Hampshire.

XQ111. Were there ever any records kept of the speed of the machines at Austin? A. I do not think so. There was no system of keeping records, anyway.

XQ112. There were kept records of production, I suppose? A. Yes.

XQ113. Did the production of these machines increase from 1902 up until the time you left in 1912? A. Yes.

XQ114. Were the machines running at the same speed in 1912 that they were in 1902? A. Running faster.

XQ115. How much faster were they running in 1912? A. That No. 1 machine when we started up we started her right around 300 and worked her up to 375.

XQ116. It was running at 375 in 1912? A. Yes.

XQ117. How much did it run in 1902? A. It was a new machine, just starting up, and new help, and I think on that 40 lb. we first started to make it at 300 and then gradually worked it up and it run 360 or 375, if stock come a little soft

or something that would hold it back 15 feet.

XQ118. When did you get it up to a speed of 360? A. I should say about six months after she run.

XQ119. Then there was no substantial change in speed between 1902 and 1912? A. No, not any substantial.

XQ120. Yet the production did increase? A. It did because the machine run better and made less broke, and other conditions helped. It don't make no difference how fast you make paper if you don't keep it on the roll you don't get it weighed out.

XQ121. Did you have quite a lot of trouble in the early years of the machine? A. Yes, getting the sulphite straightened out to suit the grade of paper we were making, and the help you get in a new mill. When the machine began to run safer it made more paper.

XQ122. About how soon did you get it fixed of these difficulties so you sustained a run and made paper at 360? A. I think the first year we run around an average of 52 ton a day, and then for the next years we averaged to 57 all sulphite paper, I think is the mill record.

XQ123. 52 in 1902? A. Yes.

XQ124. 57 tons in 1903? A. Yes.

XQ125. And 1904? A. Well, it run around there normal, because that is all the stock a sulphite mill would produce.

XQ126. In 1905 and 1906? A. Just about the same.

XQ127. 57 tons right along? A. Just about, yes.

XQ128. That was all three machines? A. Yes.

XQ129. What was the production on No. 1 machine during 1902? A. I should say about 21 tons.

XQ130. How about it in 1903? A. She would average about 23 to 24.

XQ131. In 1904? A. It did not vary while I was there, as I told you, because that was all the stock the sulphite mill would produce, and that is about the way it run. We did not speed up. We just run right around normal speed all the while.

XQ132. So that 23 or 24 tons would be the production on No. 1 machine during all the years from 1903 to 1912? A. Yes.

XQ133. That would be 23 or 24 tons per day? A. Per day.

XQ134. Does the amount of production that you make on a machine vary according to the weight of the paper you are making? A. Sure.

XQ135. The heavier the paper the greater the tonnage you produce per day? A. Yes, unless you can run the light weight fast enough to make up for her?

XQ136. Well, can you? A. I have never been able to, not

on that class of paper. Of course in newspaper it runs around 600 feet. As the International makes 32-lb. paper, they turn out a pretty good production, but at the same time a 90-lb. sheet run slower would make more stuff.

XQ137. When you are running on heavy weight papers you have more stock forced on the wire in the course of a day? A. Yes, at slower rate of speed.

XQ138. But the total bulk of the stock that goes on the wire in the course of a day is greater in case of heavy weight paper than in light weight? A. Yes.

XQ139. And you have that much more water to get rid of? A. Yes, and that much thicker and heavier paper to dry and get the water out of.

XQ140. Have you seen these machines lately? A. I have never seen them since I left there; have not been back.

XQ141. Did you say that the maximum elevation you could get on that machine with the adjustment that was provided was five inches? A. You could go higher than that if you wanted to.

XQ142. Do you know how high you could go? A. I never tested it out, never measured that screw, but I knew that the screw was not entirely out and I could have gone higher.

XQ143. What screw do you mean, referring to this blue print? A. I mean the screw that holds this breast roll in here. I refer to the screw which I mark A on Exhibit V.

XQ144. Did you ever take that screw out or look inside the pedestal to see it? A. I never took it entirely out of the pedestal because that would be quite a job, but we used to oil it up and keep it clean. There was an opening back of it so that you could keep it clean. That is my recollection, I know that all right. I think you could go up three inches higher if you wanted to; could go eight inches as I remember.

XQ145. At any rate, you think you could have gone three inches higher than you did go? A. Yes, than I did. I have operated two machines with this on. There is one at Groveton, New Hampshire; the same thing, Horne machine.

XQ146. How many machines have they in Groveton? A. Three, two Puseys and one Horne

XQ147. You don't know when the Horne machine up there was put in? A. That Horne machine has been in five years; no, six years. It was in the year I went there, put in in September and I went there in October. It has this same arrangement on it.

XQ148. Referring again to the matter of that screw. You said, as I understood you, that when you had it adjusted as you did have it the screw was not wholly out? A. No, there was

more screw for the nut. It would have come up through that wheel on top. I am sure it would have gone up two or three inches further if necessary.

XQ149. That is, there was screw threads there inside the pedestal for that length of two or three inches below the cap of the pedestal? A. Yes, below the cap of the pedestal. As I remember there was all of that.

XQ150. Is stock that is made of 100% sulphite a free stock or slow stock? A. It depends on the beating.

XQ151. As it was made in those days, was it a free stock or slow? A. It was quite slow. On the light weight paper we beat quite a lot as compared with the heavy weight.

XQ152. As compared with stock partly ground wood and partly sulphite, is pure sulphite stock free or slow? A. Pure sulphite stock is free, that is, unless you beat it, that is, you can beat it and make it as fine and slow to get water out of as beated stock, but normally it is freer.

RE-DIRECT EXAMINATION.

By Mr. Paul:

RDQ153. Did you ever use any blocks under the posts at the breast roll for raising the breast roll? A. No, only to take up the incline to make the graduation when the machine went up.

RDQ154. The only place where you used any block was under the pedestal near the suction box? A. Yes, sir.

Deposition closed.

Signature waived.

GEORGE C. BAYLESS,

a witness called on behalf of defendant, first being duly sworn, deposes and says, in answer to questions by Mr. Paul, as follows:

Q1. What is your full name? A. George C. Bayless.

Q2. Where do you reside? A. Binghamton, New York.

Q3. What is your age? A. 55.

Q4. How long have you lived in Binghamton? A. I have lived here since I was seven years old.

Q5. What is your present occupation? A. Manufacturer.

Q6. Of what are you a manufacturer? A. Principally paper.

Q7. What is the name of the company with which you are connected, the paper company with which you are connected? A. The Bayless Pulp and Paper Company, a New York state corporation, and the Bayless Manufacturing Company, a Penn-

sylvania corporation.

Q8. Does your company operate a paper mill? A. We do.

Q9. Where is that mill located? A. At Austin, Pa.

Q10. When was that mill at Austin, Pa., erected and put in operation? A. Broke ground for the mill in July, 1900. The sulphite end of it was operating in the early spring of 1901. The paper machines—now, the sulphite mill was operating about May of 1901, and we sold our pulp then to different paper mills until the paper machines were in operation, and they were in operation in the early part of 1902.

Q11. What machines were used in the Austin mill? A. We had one machine which we took from our Binghamton mill, which was dismantled and property sold to the railroad company. We purchased two new machines from Horne & Company in addition.

Q12. That is J. H. Horne & Sons Company? A. J. H. Horne & Sons Company, I think it is.

Q13. Lawrence, Mass.? A. Lawrence, Mass.

Q14. What experience had you had personally in the operation of a paper mill prior to the time of the erection of the Austin mill? A. We started to build a pulp mill here in 1882 or 1883. That was in operation at the end of 1883 or early part of 1884. We made ground wood pulp. Later that mill was turned on to pulp boards, box boards, and then we began the manufacture of fibre papers, the box board machine being replaced by the Fourdrinier machine, the same machines we have here. We had a fire in 1893 at the very first of the year, but it did not materially injure the paper machine. That mill was rebuilt that year and started up again in the fall. We made fibre papers here until we started the Austin mill.

Q15. Did you have personally to do with the operation of this mill in Binghamton? A. I did.

Q16. In what way were you engaged in its practical operation? A. Well, of course, I was the manager of the mill, but practically I worked in that mill from every job excepting firing of the boiler.

Q17. You were then familiar with the operations that were carried on in that mill? A. Yes.

Q18. In the Binghamton mill you say that the machine, one of the machines which you now have at Austin, was used, that is the machine that is called the No. 3 machine, at Austin? A. No. 3 machine, excepting that we have added to it there.

Q19. What is the width of that machine? A. 66-inch line.

Q20. What was the make of it originally? A. I think it was a Rice-Barton machine, I am not sure for the reason that we

bought that machine from a writing paper mill that had been in use and we had it overhauled and different things put on after we purchased.

Q21. When the No. 3 machine, as you now call it, was used in Binghamton, what was the arrangement of the wire, as to whether it was run flat or otherwise? A. The wire was run flat until about 1894.

Q22. Then what was done? A. After the fire, when we rebuilt, we gave that wire a pitch and it run that way until the mill was dismantled. It was a fixed pitch.

Q23. How did you get the pitch for that wire? A. We had two hardwood pieces, one for either side, and they were about, I should think, 12 feet long running from the breast roll stand back under the permanent rail behind the suction boxes.

Q24. How much elevation was given by those pieces, what was the shape of the pieces? A. That wedge was perhaps about ⅜ inches thick on the thin end and about four inches thick at the top end.

Q25. That gave about how much elevation? A. I suppose about 3 or 3½ inches.

Q26. What was the length of the wire in that machine? A. That is a short wire, 33 feet. Is not that a 40 feet wire now? I am not sure myself whether we have lengthened that out. I think it is 40 feet wire now, but I think at that time it was 33 feet wire. That is my recollection.

Q27. It did not exceed 40 feet at that time? A. No, I think it is 40 feet now.

Q28. What was the purpose of having that incline to the wire in that machine you used in Binghamton? A. The story of that is this: A tramp paper maker came to us about the time we were starting up after rebuilding from the fire, and we were having a call for 40 lb. water finished paper. We had been making mostly heavy weight fibre papers, 40 by 48, 150; some 50 lb., 60 lb. and 250 lb. basis, and all those heavy weight, and we had difficulty in making the 40 lb. sheet, and this tramp paper maker, by the name of Long, said that he had seen a machine where they were running on light weight papers, which we considered those to be at that time, running with a pitched wire which got the stock down at the same speed that the wire was running at and you could carry plenty of water down with it and get a better formation, and he thought that we ought to try it. As we had to make 40-lb. paper, we tried it, and it worked so well we never disturbed it.

Q29. Run that up to the time that the machine was dismantled and moved to Austin? A. I remember that after the

machinery had been shipped, the machinery, junk, etc., that was left here, and I went over to the old plant and I saw those wedge rails lying along the Fourdrinier ends where they had taken them out, right in sight.

Q30. By whom was the purchase of these two machines which you got from Horne negotiated on the part of your company with the manufacturer? A. I negotiated for those machines, no one else.

Q31. What, if any, arrangement did you make in purchasing those machines as to a pitch of the wire? A. We agreed on practically all the details of the machine excepting the Fourdrinier part. I told them that I wanted and must have a machine in which the wire would shake the same top and bottom, and that we could raise and lower it in accordance with the kind of paper we were making. That was a subject of discussion between Horne and myself, and it is long, long ago, but I presume between his draftsman or his superintendent. We talked that over and I had been down to see an arrangement that Moore & White had for just shaking. It was not a lowering and raising device, and that did not exactly shake the top and bottom alike. That gave me an idea of hanging a brass cable suspended on a screw, so that when we shook this in the middle we would get uniform shake top and bottom and also enable us to raise and lower the breast roll in accordance with the kind of paper we were running and the speed of the machine, and Mr. Horne advised me after a bit that they had got that all right, that device, and then they sent me the print of it and I told them it was all right, they could go ahead, and probably one reason why the contract was not formally signed until up into January or first of February in 1901 for them was that we had been talking the matter over about the machine and contract, etc., and they knew they were going to have a bill for it at the end of 1900.

Q32. Where did you have these talks with Horne? A. In our office here which was over in the Savings Bank building.

Q33. Horne came over and had these talks with you at that time? A. He did.

Q34. How early did you begin negotiating with Horne for these machines? A. It was in 1900, towards the end of 1900.

Q35. Do you know when the contract for the machines was signed? A. I won't be sure. I think I might find that. My recollection is that it was about the first of February, 1901, not far from that, right after the first of the year, I am sure.

Q36. What was the purpose or object in asking Horne to provide the machine with this adjustment that you have spoken

about? A. We had found that the machine at Binghamton worked quite satisfactorily with a certain amount of pitch. We proposed to run these machines at a much higher speed than the Binghamton speed and consequently I wanted more pitch than I had on the Binghamton machine for light weight paper.

Q37. Why did you want the pitch on the light weight paper in the operation you wanted to get? A. Because we could get a much better formed sheet by reason of running the stock on the wire at practically the same speed of the wire, and get the water well down to the suction box, enabling us to make a better formation of the sheet.

Q38. Did Horne furnish you with a drawing and blue print of that construction? A. Yes.

Q39. I ask you to look at the blue print which I now hand you, which is marked Defendant's Exhibit V, and ask you to state whether that is a drawing like the one that Horne furnished you? A. That is one of them. I expect we had several.

Q40. Have you any other drawings here of that machine? A. Yes, there are others here. Here is the ground or flat plan of the machine.

Q41. Does that drawing you have in your hand show anything of this matter of adjustment or is that simply the plan? A. This is the ground plan. It shows the shake. Here is the breast roll. That is practically all that it does show.

Q42. What is the date of that drawing? A. March 22nd, 1901.

Q43. What is the drawing I now hand you? A. This is the drier end of the machine, showing just the driers. In negotiating with me he put my name only on this drawing.

Q44. This last drawing which you refer to does not show anything of the adjustment part? A. No, it is the dry end of the machine.

Q45. Please state when these machines were installed at Austin, the Horne machines? A. In 1902. No. 2 machine was started first about May, I should say that No. 1 machine was running about two months later, from my recollection. I am sure about this one starting up in May because at that time I brought my man over here down there.

Q46. When was the No. 3 machine installed, the one you had out here in Binghamton? A. Just as quickly as we could set it up after these machines.

Q47. That came after the two Horne machines? A. About the same time that No. 1 was started up practically.

Q48. Did you give the No. 3 machine moved from Binghamton any slant or pitch to the wire? A. I do not know just what

they did at that time, I do not remember.

Q49. Do you know how it is running at the present time? A. They have been running the heavy weights, I think, I am not sure.

Q50. What use was made of these Horne machines in making the different grades of paper, that is, which machine was used on which kind of paper? A. No. 1 machine was run on the light weights and No. 2 was run on the heavier weights originally, with No. 3 taking the heavy weights and odd sizes that did not fit either of the other machines.

Q51. After the Horne machines were installed, you sustained about the adjustment that was used to the kind of weight of paper that was used and the speeds at which the machines were run beginning about the time they were installed? A. At the time these machines were installed the majority of our orders were for paper 50 pounds and heavier, and we figured we would have 40 and 50 lb. sufficient to keep that one machine going on that weight.

Q52. Which one do you mean? A. No. 1 machine. Of course, conditions changed so that we practically kept both of them on light weights today, but those machines were able to run 400 feet or better. We expected to run, of course, much faster than we had been running the light machine in Binghamton, and we always have been running faster. The wire was longer, the drying surface was greater, the calenders more of them, and larger rolls, so that that machine could run much faster on 40 lb. paper than we could run it here in Binghamton.

Q53. I asked you about the speed and the pitches. What use was made of the adjusting device? A. This device was to enable us to run the machine with a 6-inch pitch, up to a 6-inch pitch, and also to depress it some below a level if we were obliged to run it that way, or if advisable to run it that way on account of extremely heavy weights of paper. I do not know exactly what pitch they started that machine. We did not start the machine off at its maximum speed, because at that time our sulphite was not absolutely uniform, and many reasons in starting up a new machine why we could not do it, but after about a year and a half perhaps we were running that machine up to a very fair speed, and our sulphite plant had straightened out and things were running about normal. We are running that machine at the present time on water finish paper to 380 feet. The machine that is running dry finish paper is running 425.

Q54. Can you say up to what speed you got the machine during the first one and one-half or two years after you began operating it, and after you got your other things adjusted? A.

The speed of that machine never is absolutely one thing. Conditions of the stock makes a difference of 10 or 15 feet in the speed of the machine, run it fast as you can and run safe. A water finish paper is a hard paper to run in many respects. We were running that machine in 1904, we must have been running that machine along from 300 to 350 or 360.

Q55. Why do you say that; do you say that from memory or recollection, of what the speed was? A. Partly, but the fact is that at that time we used nothing but hemlock sulphite to make these papers, and our output for that year was about 57½ tons a day for 300 days running, and that represented all of the sulphite we could make at that time in our sulphite mill. There has since been a digester added. A speed of 300 feet and better per minute would have given us a production on that machine of about 25 ton. We made on the No. 2 machine within two or three tons of the same production that we got on the wider machine, No. 1, and we averaged about 9 or 9½ tons on the small machine; therefore, it is evident that that machine had to run about 300 feet or better speed because if you run at 300 feet and it shows 25 tons production there is so much waste, so much broke that has to be worked over in our beaters in this water finish paper, that she had to be run at times considerable faster than that in order to have made average production, or about that average, for the 300 days a year.

Q56. What use were you making during these early years of the adjusting device, what pitch were you giving to the wire on the No. 1 machine? A. The light weight machine?

Q57. Yes, the light weight machine. A. It run all the way from 3 to 5 inches, so far as I know. There may have been times, you know, they used a 2-inch pitch on that, I cannot tell you, but ordinarily they were using as much pitch as was required to give them a properly formed sheet.

Q58. Do you know they did at times run as high as 5-inch? A. Yes, I know they did. I asked them how much pitch they had and they say they would have full 5-inch of pitch, and there was still another inch they could have got, and they may have run up to that.

Q59. Would you say from your own observation of the machine that it did have that much pitch? A. I should say so as near as I can recollect. It was about the same as we are running there today, that 6-inch pitch.

Q60. Do you know that pitch was used on the machine? A. I know that it was.

Q61. Do you know whether there was any blocking in connection with the center pedestal in those early days? A. Yes.

Q62. What was that? A. There was a wood block put under this post right here. (Indicating).

Q63. You mean the center pedestal? A. Yes, on the Fourdrinier part.

Q64. What was the purpose of that? A. The purpose of that was to bring the machine, the Fourdrinier part in a one line of incline clear down to the end of the permanent rail.

Q65. Practically down to the guide roll? A. Down to the guide roll, that is the spot. The original block is under the No. 2 machine.

Q66. Were both machines blocked under the center pedestal? A. They were.

Q67. Now, what was done about the adjustment of the No. 2 machine at the breast roll? A. Same adjustment as the other. We had a block under the middle pedestal just the same only that was not quite so thick because we were running on heavier papers and did not give that machine ordinarily quite as much pitch as the other.

Q68. Is that block still there? A. Yes.

Q69. There seems to have been a little conflict in the testimony of the two witnesses here as to the No. 2 machine, one witness stating that the machine was always run flat and the other that it was used with the adjustment. What is the fact as to that No. 2 machine? A. The No. 2 machine was run with the adjustment same as the other, but there was less adjustment considerable than was used on the No. 1 machine; otherwise there would have been no reason for putting the block under the middle post. The fact was we were running much heavier papers on that machine than on the others and we operated a good deal of the time on those heavy papers with a flat wire, but it transpired that our orders were calling for lighter weights and we had to put light weights on that machine, and we had to elevate the breast roll.

Q70. You did use that machine with the breast roll elevated? A. Yes.

Q71. Did you at some time have a flood there at Austin that partly destroyed the mill? A. We did, September 30th, 1911.

Q72. What did that do to this No. 1 machine? A. It partially wrecked that machine.

Q73. What about the No. 2 machine? A. The No. 2 machine was uninjured.

Q74. What was done with the No. 1 machine by the way of repairs? A. It required all new gears, driers, new stands and the machinery part we had to replace more or less of it. I think there was a bill of repairs to the Fourdrinier part in the neigh-

borhood of $1500. They had many parts remaining and those were utilized and whatever was spoiled was replaced.

Q75. Did Horne at the time when you first talked with him about this adjusting device have any kind of an adjusting device for the Fourdrinier that he explained to you? A. He did.

Q76. Was it like this, or what was it like? A. No. I remember when I brought that up, he said they had an adjusting device but would not recommend it. It was nothing but a little cam that worked up under the foot here in some way and was right down there in the water, and the contrivance would be rusty and inoperative shortly, and they had no adjustment to speak of, about 2 or 3 inches.

Q77. That was not satisfactory to you? A. No, I did not want anything of the kind.

Q78. I call your attention to a patent issued to C. E. Barrett and J. E. Horne, assignors of the J. H. Horne & Sons Company, No. 691,333, dated January 14, 1902, and application filed June 28th, 1901, and ask you to look over the drawings and to state whether that shows substantially the device that was provided by Horne for those two machines at Austin? A. Yes, sir, that is identically the same. Yes, sir, that is the plan.

Q79. Did you watch these machines after they were installed and see them in operation frequently? A. I was in Austin most of the time for two or three years.

Q80. What did you find as to whether the machine did or did not secure the results you desired when you asked Horne to get up a machine of this kind? A. It did. We were running that machine at more than 50% faster than we ran our little machine here; that was not entirely due to this, but the longer wire part, safer machine, but that was the idea.

Q81. What did you find as to the operation of the pitched wire, did that operate as you intended? A. We have used it ever since.

Q82. Did it operate as you had intended? A. Yes, sir.

CROSS EXAMINATION.

By Mr. Lyman:

XQ83. At what speed did you run the No. 3 machine here at Binghamton? A. Maximum speed was about 200 to 225. That was the most that we could get out of it.

XQ84. What was the average speed? A. We run at that speed on 40 lb. and 50 lb. paper. The other weights of paper were dependent on the thickness of them. We made here papers as high as 24 by 36, 135 pounds to a ream, and naturally that was run pretty slow.

XQ85. What would be the average speed of that machine?

A. On all weights?

XQ86. Yes. A. Probably 150 or 160 feet.

XQ87. And what was the lowest speed? A. About 70 feet, I think, or 75 feet, I guess 75 feet, 3 to 1, I think, that is the way she was arranged to run.

XQ88. What was the head that you carried in the pond back of the slices in that machine at Binghamton? A. I do not recollect.

(No XQ89.)

XQ90. Can you approximate it? A. No, I won't attempt to say about that because that is a matter that I have really forgotten.

XQ91. Do you know how much you carry on it now? A. I should say 6 or 8 inches.

XQ92. Probably the same in those days? A. I presume it was not far different. Maybe there is a little more than that. Perhaps there is a little more than that.

XQ93. Do I understand that you had this blocking under that machine so arranged that it pitched the whole wire from breast roll to couch? A. It did pitch the whole frame.

XQ94. And you did not vary that pitch according to the grade of paper you were making? A. No. It was there. It was blocked. It was there permanently.

XQ95. And your idea in using that blocking, did I understand you to say, was to give the stock on the wire the same speed that the wire had? A. This was especially for our light weight papers that we put that in. We were getting considerable demand for them and it bothered us to run with a level wire, and this suggestion was given to us and we applied it and it worked very well on the 40 lb. paper. It helped us out of the difficulty.

XQ96. Now, if I understand you correctly, the purpose for which you insisted on having that adjustment put in all the machines you bought from J. H. Horne & Sons Company was the same purpose that you had had in using that blocking under the No. 3 machine at Binghamton? A. With this exception, that we would then be able on the heavy weights to run a flat wire, and if necessary a wire below level and we would obtain better results.

XQ97. It was provided in order to give you a pitch which you would use for the same purpose that you would use in the No. 3 machine at Binghamton? A. Yes.

XQ98. Now, as to the speeds of the two Horne machines, you say that the No. 1 machine made about 25 tons a day in 1904? A. Approximately that.

XQ99. How much did it make in 1905? A. It has been doing that or a little better. We have kept up to about that average, a little bit better at present time.

XQ100. How much does it make now? A. That machine has made 51,000 lbs. on a 13-hour tour, but that happened to be an occasion when everything was exactly right during those 13 hours, and that is the most we ever did. Now, that is the machine run record, but after you have sorted that paper out and trimmed and one thing and another, we probably got about 8% less than that in the tied out paper that went out into the car.

XQ101. In tons per day, what is that machine making now? A. She is averaging 28 tons a day now, at least.

XQ102. Is she making more than that? A. At times.

XQ103. But the average would be about 28 tons? A. 28 or 29 tons, I should think.

XQ104. How long has she been making 28 or 29 tons? A. Well, she has been making that for the past six or eight months.

XQ105. Prior to that the average was about 25 tons, was it? A. It might have been a little more. It has been gradually coming up.

XQ106. But in the years, 1904, 1905, 1906 and 1907, and along there, it was something about 24 or 25 tons? A. That is about it, yes, sir.

XQ107. And to make that production per day means a speed of about 300 feet per minute? A. At least. Probably more than that. I will show you how we would figure that. If the machine was making 300 feet per minute on a sheet 24 by 36, she would turn off 100 sheets in length of five sheets wide, or 500 sheets every minute. Now, 500 sheets on the reel would give us in finished, tied out paper probably, sorted out, etc., a little less than a ream, that weighs 40 pounds; therefore, she was making 2,400 pounds an hour, and in those days we got about 21 hours average run out of those. That would show 50,400 pounds.

XQ108. That would be about 25 tons a day? A. Yes.

XQ109. The head carried on the No. 1 and No. 2 machines was about the same as on the No. 3? A. Yes.

XQ110. That would be 6 to 8 inches? A. I think so. Of course they have varied that head from time to time somewhat.

XQ111. That would be an average? A. I should think so.

XQ112. Do I understand you to say that the No. 1 and No. 2 machines had the same adjustment mechanism? A. Exactly.

XQ113. And those provided for an adjustment of the breast roll from an extreme of six inches above the level to how much below the level? A. Well, perhaps there was two inches, I can-

not be sure, slightly below the level, I think it was two inches.

XQ114. Six inches was the maximum possible above? A. Six inches above and a couple of inches below.

XQ115. Have you the contract for those machines? A. No, Mr. Paul asked me for those and I was unable to find them, and I forgot when I was in Austin to see if I could discover them there, but a great many of our papers were destroyed in the flood of 1911, and I think those went with them. I found some flood papers here that we had recovered but I could not find the Horne contracts.

XQ116. That includes the specifications for the machines? A. Yes. That was the detailed contract that we signed.

XQ117. You could get a copy of that from the Horne Company? A. I suppose they have.

XQ118. Would you be kind enough to get a copy from the company and send to me?

By Mr. Paul: I am going to apply to the Horne Company for this contract and if I succeed in getting it, I will submit the same to counsel for plaintiff.

A. I have no objection to getting them if Mr. Paul does not. I am perfectly willing to get them if Mr. Paul does not succeed in doing it. The contract may tell how far below it was. It might have been three inches below. I know it was six inches above because that was one point I was particular about.

XQ119. When was it that this adjustment was first used on that No. 1 machine to give the wire a downward pitch? A. In 1902.

XQ120. How much of a downward pitch was given at that time? A. Up to five inches, I expect.

XQ121. Did you measure it? A. I did not. I expect that I asked the machine tender or the superintendent how much pitch he was running on that wire, etc. That would vary according to the weights they were running. They would vary the pitch according to the weight of the paper.

XQ122. Why did you want more pitch for a light weight paper than you wanted for a heavy paper? A. With a light weight paper, if we had no pitch the water would immediately drop away from it before it ever reached the suction boxes, the water, most of it, and it would be so dry there we would not get any formation, spongy, a poorly made sheet of paper.

XQ123. Was it your practice when making extreme heavy weights of paper to run the wire up hill? A. We thought it might be a good scheme and it could be easily arranged, so if it was a good plan we would try it out for extremely heavy papers.

XQ124. Did you actually run them up hill, the heavy papers? A. I won't be positive, but I rather think that they have slightly, perhaps an inch or so.

XQ125. The idea being there that if you run them up hill it gave the stock more time to drain? A. With a thick sheet of pulp running up hill would give you more time to drain off the water, gives a better opportunity to drain off the water, the time I expect would be the same in passing off; otherwise it might run down clear to the suction boxes in a very sloppy state.

XQ126. Why didn't they put the blocking under the No. 3 machine when they reinstated it at Austin? A. Because the No. 3 was going to making only really heavy weight paper.

XQ127. Did they put in a longer wire on that machine when they transferred it to Austin? A. I think we increased that one to 40 or 42 feet.

XQ128. And was it not for that reason that they omitted to put under it the blocking they had had at Binghamton? A. I don't think so entirely, because it was to be run on heavy weight papers.

XQ129. Did you intend to run it at a faster speed at Austin than it ran at Binghamton? A. No, it is no faster speed, just practically the same.

XQ130. But at the same time that the wire was made longer the blocking was taken out on that No. 3 machine? A. Perhaps it was never put in under at Austin.

XQ131. I mean that when the machine was transferred from Binghamton to Austin the wire was lengthened and the blocking omitted? A. We have got 40 or 42 feet wire on it, and it was an increase.

XQ132. And that was done when? A. Before the machine was set up at Austin.

XQ133. What do you think was the pitch that was carried on the No. 2 machine? A. At what time?

XQ134. At any time? A. 1902 to 1904 and 1905, in there?

XQ135. Yes. A. I think that that machine was run more of the time level than anything else, with perhaps 3 or 4-inch pitch at times, because it did not run much light paper.

XQ136. Mr. Anderson, in testifying, said it was always run flat until he left there in 1912. A. He might be right about that. He was the mill foreman, had charge of those machines, but we always perhaps up to that time were endeavoring to keep that machine on heavy weights, that is 50 lb. and over.

XQ137. The No. 2 machine has a pitch now, I think you said? A. Yes.

XQ138. How much of a pitch has it now? A. The No. 2

machine is running a dry finished paper a good deal of the time. As I pass through the machine room I should judge that she had possibly in the neighborhood of 4-inch pitch.

XQ139. Is that given to it by blocking under the breast roll? A. I do not think so, not on that machine; certainly not all of the pitch that way.

XQ140. You don't know whether the machine has any blocking under the breast roll, in the No. 2 machine, or not? A. If there is it was a matter of quick adjustment. The screw must have got stuck along the adjusting arrangement and they shoved a block under to help them out. I am not positive whether there is a block or not under that.

XQ141. On the No. 1 machine, is there a block under the breast roll at the present time? A. There is.

XQ142. What is the size of that block? A. I should think it is about 1½ inches thick. I noticed the other day when in the machine room that there was a block there and I spoke to them about it and they gave me the reason I gave you for placing the block under there. They said they were running it a little bit higher pitch than they had been and when they came to screw it up it stuck a little bit and they put a block under there and that got the adjustment easier than with the screw.

XQ143. What is the total elevation of the breast roll on the No. 1 machine now? A. To be quite safe, I would say six inches.

XQ144. Of which two inches is due to the block? A. Yes, possibly that. It didn't look quite like a two-inch block, as I remember.

XQ145. Mr. Brown testified it was a two-inch block? A. If it was a piece of two-inch plank surfaced it would probably measure 1¾ or something like that.

XQ146. You never had the original drawing of which this is a blue print, this Exhibit V? A. I am not sure, but I think blue prints were what they furnished.

XQ147. Will you try to get the original drawing?

By Mr. Paul: I will try to get the original drawing, at least for examination by counsel. I do not know as I can get it as an exhibit.

XQ148. Was Mr. Horne that you talked with about these machines the patentee, under these patents, John E. Horne? A. I knew both of those brothers, but when you are talking initials, I am not positive which was J. H. and which was J. E.

XQ149. Presumably it was John E., the man whose patent covers this particular device? A. I think so. I am inclined to think that the father, J. H., died, and it was not the father that

I was talking with. I know him very well.

XQ150. I notice that you spoke of a pitch of two or three inches as not being of much consequence. Do you consider that there is a radical difference between a pitch of that sort and a pitch of six inches? A. I do.

XQ151. Do I understand you to say that on the No. 3 machine at Binghamton you operated in such a way as to get the speed of the stock on the wire equal to the speed of the wire? A. As near as we could.

XQ152. Do you think you did get that result? A. The result was the difference in making the broke at the end of the machine and obtaining a good merchantable sheet.

XQ153. Do you regard the pitched wire as important help in making paper? A. Many sorts.

XQ154. High speed papers? A. All high speed papers, light weight papers.

XQ155. Have you kept production records of these machines? A. I don't think so. We know exactly what the three machines produced. We have the total every year, every six months. We have a total production sheet. How long those are retained I am not sure, whether retained beyond inventory time or not. We get them every day.

XQ156. Are they destroyed? A. We get a duplicate here. We keep them a while. Perhaps they are in the file for a year.

XQ157. Any record by which you could tell what the production was 10 years ago? A. Excepting the total production that we got for the year.

XQ158. What was the thickness of the block underneath the center pedestal on the No. 1 machine? A. I think that it was about one inch to one and one-eighth or such a matter on the thick edge.

XQ159. When was that put in? A. That was put in about the time the machines were erected or shortly thereafter; practically from the time they were built, because it made a little hinge there, so they put that block under to give them a straight line.

XQ160. Could you run the machine with any elevation of the breast roll at all without putting some blocking underneath that center pedestal? A. Yes, we could.

XQ161. How much could you run without putting blocking under it? A. Nothing to hinder our tipping up the breast roll end of the Fourdrinier as far as it could be raised.

XQ162. If you didn't raise the suction box and you would have your wire leaving the suction boxes if you raised up the breast roll? A. It would not trail very well on the first suc-

tion box.

XQ163. So it was practically necessary, if you were going to raise the breast roll at all to raise the suction box also? A. We found it necessary to do that.

XQ164. What parts of the No. 1 Fourdrinier end had to be replaced after the flood? A. Those items are at Austin. I think it was about $1,500 worth of repairs. They repaired one rail. They put in rolls that were bent or dented, tube rolls. Whatever was broken was replaced.

XQ165. Did the standard at the breast roll end have to be replaced? A. I think it did. I think both posts had to be replaced.

XQ166. And the adjusting mechanism had to be replaced with the posts? A. I don't think anything but the posts and those gears and rods there. Nothing would happen to that flexible cord there.

XQ167. By the rod you mean that screw, threaded rod marked A here? A. Undoubtedly that was bent and very likely broken, and that hand-wheel and perhaps a gear or two, but this flexible cable would not have been likely to have been injured.

XQ168. How about that screw that we have marked A? A. Possibly, but you can tell exactly whether it was replaced by referring to that invoice.

XQ169. Have you that invoice here? A. No, it is at Austin.

XQ170. Could you get it for us? A. I could get it.

XQ171. I wish you would send a copy of it to me.

Mr. Paul: If I do not get this from Horne why we can get the one from Mr. Bayless.

XQ172. I think I asked you what the heads were they had been using on the No. 1 and 2 machines? A. You did, yes.

XQ173. You said six or eight inches? A. I think six or eight inches. It might have been varied.

XQ174. You said that the head in the pond behind the slices on the No. 1 and 2 machines at Austin was from six to eight inches? A. I think that is about correct.

XQ175. And that applies to those machines from the time they were started to the present time? A. Yes. There might have been some changes, but in general I think that is about right.

XQ176. When was this blocking put under the breast roll end of the No. 1 machine? A. The first time I noticed that block was quite recently, and I am sure it could not have been there a very long time.

XQ177. I show you a passage in one of these Barrett & Horne patents, viz., patent No. 634,228, page 1, lines 16 to 30,

and I would like to have you read that and say whether it correctly states the purpose of these adjustments? A. I think that is practically correct.

XQ178. One of the other witnesses has said that the flow box on the No. 1 machine has been built up, that is, the walls have been built up. As the machine now stands, can you tell me when that addition to the height of the flow box was made? A. I cannot tell you. It may have been since the flood.

XQ179. It is your best recollection it was some time since the flood, but just when you do not know? A. I do not know when it was.

XQ180. It was not put in there in the early days? A. It might have been built up due to change in the screens or something.

XQ181. It is your recollection that is of comparatively recent date? A. I do not know.

XQ182. Do you think that you were running the No. 3 machine when it was at Binghamton with the wire running up hill? A. No.

XQ183. I mean before the blocking was put in? A. No.

RE-DIRECT EXAMINATION.

By Mr. Paul:

RDQ184. I ask you to refer again to the statement in the Barrett & Horne patent No. 634,228, to which your attention was called by counesl for the plaintiff, and to say whether that states all the objects you had in view in having the Horne machine provided with the 6-inch adjustment to which you have referred? A. Our object, of course, was to get a better formed sheet than we get otherwise with a flat wire.

RDQ185. And did the question of the speed of the machine enter into it? A. Yes.

RDQ186. In what way? A. Because we could run faster by forcing our water down into the suction boxes, making a well-formed sheet, than the other way. We could get more speed.

RDQ187. Why was that? A. We had a better formed sheet, a closer formed sheet, less brokes, and could keep the edging up on the side. We are running about 15 feet faster now with a 6-inch pitch than we did with a 5-inch pitch, both our stock and wire working uniformly together.

RDQ188. Does that aid, you think, in getting a good sheet? A. I think it does.

RE-CROSS EXAMINATION.

By Mr. Lyman:

RXQ189. Have you examined this model that Mr. Paul has produced here? A. Not particularly. He only took it out here just as you came in. I saw immediately what it was when he took it out of the box.

RXQ190. It purports to illustrate the principle but does not purport to illustrate accurately the dimensions of the adjusting mechanism? A. I do not know as to that. It is the principle of the proposition that is shown. I notice that it has the same post that was originally under the machine and the same way for raising and lowering.

RXQ191. You do not pretend that that is an accurate model?

By Mr. Paul: I do not know at this time. I had this model made from the blue print like the Exhibit V. I have never had it accurately compared, and I would not claim that it was an accurate model unless the same had been compared by some competent person who could testify in reference to it. At the present time I use it merely as an illustrative model.

Deposition closed.

Signature waived.

Taking of depositions before Mr. Beach closed.

Printing of notary's certificate waived.

DISTRICT COURT OF THE UNITED STATES,
DISTRICT OF MAINE.

EIBEL PROCESS COMPANY, Plaintiff,

vs.

MINNESOTA & ONTARIO POWER COMPANY, Defendant.

Depositions taken on behalf of defendant, by stipulation and agreement of counsel, at the office of Pejepscot Paper Company, Topsham, Maine, before A. J. Hutchinson, Esq., notary public, beginning on Monday, November 26, 1917, at 11 a. m.

Appearances: Harrison F. Lyman, Esq., for plaintiff. A. C. Paul, Esq., for defendant.

And thereupon the following proceedings were had:

J. H. MACHETTE,

a witness produced on behalf of the defendant, being first duly sworn, deposes and says, in answer to questions by Mr. Paul, as follows:

Q1. Please state your name, age, place of residence and occupation. A. J. H. Machette, age thirty years; my post office address is Brunswick, Maine; I am assistant general manager of the Pejepscot Paper Company.

Q2. What is the business of the Pejepscot Paper Company? A. Manufacture paper and lumber.

Q3. How long have you been connected with this company? A. Seven and one-half years.

Q4. In a general way, what are your duties? A. Why, general executive work, general operation of the mills.

Q5. How many paper mills does this company operate? A. Three paper mills and three pulp mills.

Q6. What are the names of the mills? A. The Lisbon Mill, a sulphite and paper mill; Pejepscot Mill, a paper and pulp mill; the Bowdoin Mill, a paper mill; with the addition of one other pulp mill, the Topsham.

Q7. That doesn't make paper? A. It makes ground wood.

Q8. Where is the Lisbon Mill located? A. Lisbon Falls.

Q9. How far is that from Brunswick? A. About nine miles.

Q10. Where is the Pejepscot Mill located? A. Pejepscot.

Q11. How far is that from Brunswick? A. About four and one-half, five miles.

Q12. How many paper machines are employed in the Lisbon Mill? A. Two machines.

Q13. What make machines are those? A. Pusey & Jones.

Q14. Those are Fourdrinier machines? A. Yes.

Q15. How many machines in the Pejepscot mill? A. Two machines.

Q16. Are they the same make? A. Yes, same make.

Q17. Do you know whether these machines used pitched wires? A. Pitched wires?

Q18. Yes. A. Some pitch, yes.

Q19. Do you know about how much pitch is used on the machines? A. I can't say accurately, but I should say from three to five inches.

Q20. Who is the superintendent of the mills? A. The general superintendent is C. R. Dickinson.

Q21. Is he superintendent of all the mills? A. Yes.

Q22. Has he been with the company ever since you were employed? A. Yes.

Q23. What kind of paper is made by the different mills?

A. The Lisbon and Pejepscot Mills make news print, and the other mills specialties.

Q24. I do not think I asked you about the machines in the Bowdoin Mill. A. Four machines in the Bowdoin Mill, one Pusey & Jones. By the way, the Bowdoin Mill is in Topsham, and not Brunswick.

Q25. Do you use any pitch on the wires in the Bowdoin Mill? A. No; as far as I know, they are level.

Q26. Do you have any record of the production of the Lisbon and Pejepscot Mills? A. Yes, we have a daily record.

Q27. From that do you make up a monthly record? A. We make up a weekly record from those daily records.

Q28. Do you know the width of the wire used on the machines in the Lisbon Mill? A. The width at the Lisbon Mill is 104 and 84.

Q29. And the machines af Pejepscot? A. They are 144 and 126. Those are the widths of the wires.

Q30. Can you state what these machines trim? A. The Lisbon Falls trims 73 and 93½.

Q31. Pejepscot? A. Pejepscot, 134 and 112 to 114.

Q32. Will you refer to your reports of the last few months and state the production of these Lisbon Falls machines for the month of October? A. I can't give them to you by the month. I can read off a number of weeks from this book (indicating). In the month of October, here is one week, 610,000.

Q33. (By Mr. Lyman): That is for two machines? A. Two machines for the week.

Q34. October, 1917? A. That is for six days, that is the product for six days running, an average of 101,700 a day for that week, ending the 6th.

Q35. (By Mr. Paul): At what speed were the machines running? A. At that time 522 feet.

Q36. (By Mr. Lyman): Both machines? A. Yes.

Q37. (By Mr. Paul): Now, you might go on and state some of the other weeks. A. Of course, you understand the setting on these machines varies from day to day so that they are not covered to those widths I gave you continually. Instead of 93 inches on one machine, very often we have 88 inches; and instead of 73 inches on the other machine, very often we run 68 inches, according to our orders. Here is another week with 615,000. That is an average of 102,600 a day.

Q38. What was the speed for that week? A. The speed that week was 522.

Q39. (By Mr. Lyman): What week was that? A. That was the week ending October the 13th. Here is another week

ending the 20th; total, 603,000; 100,600 average for the day that week.

Q40. (By Mr. Paul): What was the speed that week? A. 522. Here is another week ending the 27th.

Q41. Of October? A. Yes. A total of 608,000, an average of 10,500 a day.

Q42. (By Mr. Lyman): Speed the same? A. Speed the same, yes, sir.

Q43. (By Mr. Paul): Now, do those figures show about the average production of those machines? A. You mean the possible theoretical production?

Q44. About what they actually produce from week to week? A. Yes. That is the present production.

Q45. What is the possible theoretical production during that period? A. Well, I would have to give that—we simply have that by tours; three tours in each day. We figure out what the machine ought to make on a given running time, what it would figure in the time if it ran eight hours.

Q46. Then pick out certain of the tours and state the actual and the theoretical productions. A. I can say here that the theoretical production, the highest I have of record here—a good high one—on a 23½ hour run, which is a full day's run—half hour shut down for wash up—is about 105,000. That is on full setting.

Q47. (By Mr. Lyman): What do you mean by "full setting"? A. The machine covered with paper; that is, as I explained, with 92 inches width. Here is October the 18th. No. 5 machine had 68⅝ inches of paper on it. No. 6 machine had 91¾. That was below the normal setting by about 4 inches. They ran 522. Possible production on the first tour 14,550; we made 15,424. That ran a little more. Possibly a little heavier weight paper and the wrapper on it. Of course we figure in our production the wrapper. That ran plus 874. The next tour, the same day, ran 7¾ hours. Possible theoretical production 15,035, made 15,299; that was over 264. The last tour ran for 8 hours. Theoretical production 15,520, made 15,106; that was short of the possible by 414 pounds. Here is No. 6 machine on the same day. The first tour, theoretical production 19,794, made 19,577; short 217. This tour ran 7¾ hours. The next tour ran 7¾ hours. Theoretical production 19,794; actual 20,321; 527 over. The last tour ran for 8 hours, with a possible production of 20,432; made 19,656; short 776. The total product was 105. In that month there were a lot of other 105's and 4's and 3's. When we get an average for the week it means—if we have an average of 103, there are a lot of 99's and 98's.

We are down putting on wires three or four hours.

Q48. (By Mr. Paul): Now, will you refer to the record for the Pejepscot Mill and give the same information respecting the production of that mill? A. There is the week at Pejepscot ending July the 14th. Made a total of 938,397; daily average of 156,300.

Q49. (By Mr. Lyman): Both mills? A. Yes, both mills. Here is the week of the 21st—149,300, and the first one is the 14th of July.

Q50. Is that a daily figure? A. 149,300.

Q51. (By Mr. Paul): What speeds were those machines running on those two days? A. Those were running, No. 7, 512; No. 8, 510. There is the week of August 11—918,000; average 153,000 for a day, at the same speed.

Q52. Now, will you refer to some dates in October. You gave October dates for the Lisbon Mill. A. In October the Pejepscot was in a mass of trouble, mechanical trouble,—breakdowns, etc., and it is not a typical month. Any one of the eight months up to October was a typical month of the year, and October is not a typical month.

Q53. Give some record for September. A. Here is the week of September 22nd—902,000; an average of 150,400.

Q54. And the speed? A. The speed was the same, 512 and 510.

Q55. What is the theoretical production for that week in September? A. I can't give you the whole week. I can take any day here,

Q56. Yes, do that. A. Here is September 20th, on the first tour—I can give you those three tours; just add them up and give you what that would be for the day.

Q57. You might give each tour first. A. The first tour should have made 22,562 pounds. That ran for 7¼ hours. It actually made 22,435. The next tour ran for 8 hours—this is No. 7 machine; should have made 24,680; it made 24,900. Here is the last tour. It ran for 8 hours; should have made 24,896; made 25,535. Here is the first tour on No. 8, the same day; should have made 27,330; ran for 7½ hours, made 26,626. The next tour should have made 29,152; made 27,950—8 hours. The next tour ran for 8 hours; should have made 29,152; made 28,400.

Q58. Are those fairly typical? A. Those are fairly typical results when we do not have mechanical troubles. That is what we expect of the machines, demand of them.

Q59. How do you figure the theoretical production? A. We take the speed of the machine, the width of setting paper on

that day, the weight basis of paper—32 pounds, all of our paper is 24 by 36, 32—and figure what the machine should have made at that speed, at that weight, at that width of paper. That speed is at the calender, and that is where the paper is trimmed off.

Q60. Have there been any changes in these machines since you have been with the company, the last four or five years? A. Yes, there have been various changes that were made from time to time in the way of improvements on the Fourdriniers, improvements on the other parts of the machine.

Q61. What has been the line of those changes? A. Mostly replacement of old, worn out material, replacement of the old, unbalanced and crooked table rolls and wire rolls, with new balanced rolls, new wire rolls, modern wire stretchers. Some of those changes have been completed within three or four weeks after some of these products I read to you. There was another change we made in the way of governors; we govern our machines more accurately.

Q62. What effect did these changes have on production? A. Those changes, in conjunction with other changes that were made in our method of grinding wood, have tended to greatly increase production.

Q63. So far as you know, has there been any change in the pitch of any of these machines since you have been in the company? A. I can't say that definitely; none that I know of, although there may have been from time to time. We leave that wholly to the superintendent and he would make a change without reporting it; but I have no recollection of any changes.

(Direct examination closed.)

CROSS EXAMINATION.

By Mr. Lyman:

XQ64. What prevents your running the machine at faster speed? A. At Pejepscot, we are up to the maximum on the engines. We are overloaded now some 20 or 30 per cent; can't get another inch out of them; tried it.

XQ65. And at Lisbon? A. At the Lisbon, our transmission. The main trouble we have always had has been with our transmission. The walls carrying the transmission were not constructed strong enough to stand the extra strain of additional speed; in fact, we have had them go faster. When the walls cracked we slowed them a little. In addition to that we had the old rolls that were not balanced, light rolls; and years ago when we had them running faster they danced around so much that we felt it wasn't policy to keep them running at any such speed, so we slowed them a little.

XQ66. Have you tried running at faster speeds than the speeds you are at present employing at Lisbon? A. We have. We have tried running faster and tried running slower. We had them slower a little while ago until we put in this new equipment, when we speeded them up again. We have had them a little faster, and ran successfully faster until we cracked our walls carrying the transmission. Then our engineer did not sanction running them up that fast.

XQ67. How fast did they run? A. This is before my day. I can remember them running 540 to 550. According to information that I can get, prior to the time that I was connected with the company we have had them up to 550 to 560.

XQ68. When did you become connected with the company? A. Seven and one-half years ago.

XQ69. That would be— A. 1910.

XQ70. Middle of 1910? A. Yes.

XQ71. You said there were four machines at the Bowdoin Mill? A. Yes.

XQ72. What kind of machines are they? A. They are of various makes. One of them is a Pusey-Jones; one is a Sandy Hill; and two of them are mongrels. One of them was made years ago by Rice and built over by Horne years ago. Another one we put together ourselves; the various parts we bought from time to time.

XQ73. What kind of paper do they make? A. Specialty papers.

XQ74. And run at comparatively low speeds? A. Various speeds, yes, depending upon the width of the paper and the kind of paper—anywhere from 25 feet to 320 feet. That is the various machines. Not all of them go that low, not all of them go that high.

XQ75. These productions that you have given you say are average for the present time? A. Why, present time, yes. We consider everything present within 6 or 8 months; that is, we have our ups and downs because of mechanical troubles. We may have a very bad week and would not make a high average, and we would expect to make it up in the next week and hold our average up.

XQ76. Prior to the last six or eight months, were the productions lower than these? A. Prior to 1917, the production was very slightly lower at the Pejepscot Mill, perhaps a ton a day on the average, or half a ton to a ton a day.

XQ77. And at Lisbon? A. At Lisbon, about 1916, for instance, the product was perhaps a little bit lower, not appreciably lower then than now.

XQ78. Can you remember what the productions were in 1910? A. I could not without referring—unless I used my memory, which is not certain. We have records in the office here somewhere; it will take some time to find them.

XQ79. It may not be material; I won't bother you about them now. A. I should say in 1910, as I recall, the productions were a little bit lower than they are now; but, owing to deterioration of machines after that, they went lower and lower until we reached a low mark, and then we went up again as we put improvements on the machines and put them back into shape.

XQ80. Is speed of production an important thing in paper manufacture? A. Is speed of production?

XQ81. Yes. A. Yes.

XQ82. That is what you are aiming at? A. What we are aiming at is the maximum product.

XQ83. Because the larger your products the less they cost per unit. A. Yes; very large unit production.

XQ84. And are you familiar enough with paper manufacture generally to say whether or not all mills are always making every effort they can to get as much speed as possible out of their machines consistent with good paper? A. I should say so, yes. I will qualify that. Consistent with good paper and the expense to which you want to go financially in changing your machines.

XQ85. What are the mechanical troubles that have been limiting the production at Pejepscot during October? A. Well, various mechanical troubles, such as calender belts. Here is one day I find an hour shut down. We usually have half an hour shut down a day. Belts come in bunches; felts come in bunches; more in one month than another. Sometimes we have more wires in a month than we have in another month. Here is a day I find instead of half an hour we had an hour and a half to put on new rolls and boxes and drier felts, screen belts, wire guides; and here is a day we lost two and a quarter hours on account of felts and a steam line burst at the boiler house. It is just a general gathering of calamity sometimes into one month. Usually it is distributed.

(Cross examination closed.)

Mr. Paul: You will waive signature of this witness?

Mr. Lyman: Yes.

Recess to 1:30 p. m.

CHARLES R. DICKINSON,

a witness produced on behalf of the defendant, being first duly sworn, deposes and says, in answer to questions by Mr. Paul,

as follows:

Q1. What is your full name? A. Charles R. Dickinson.

Q2. How old are you? A. Fifty-two.

Q3. Where do you reside? A. Pejepscot.

Q4. How far is Pejepscot from Brunswick? A. About three and one-half miles, four miles.

Q5. What is your present occupation? A. Superintendent of the manufacture at the Pejepscot Paper Company.

Q6. How many mills under your charge? A. Four.

Q7. What are those mills? A. Lisbon Falls, Pejepscot, Bowdoin and Topsham.

Q8. How many of these are paper mills? A. Three of them.

Q9. Which are the three paper mills? A. Lisbon Falls, Pejepscot and Bowdoin.

Q10. What is the Topsham mill? A. It is a ground wood mill.

Q11. Any pulp mill at Lisbon? A. Sulphite.

Q12. And at Pejepscot? A. Ground wood and paper.

Q13. How long have you been in the paper manufacturing business? A. Well, let's see—since I was about nineteen years of age.

Q14. How long have you been connected with any one of the mills of which you are now superintendent? A. Since, 1891.

Q15. What mill did you first become connected with? A. Lisbon Falls Mill.

Q16. How far are the Lisbon Falls Mills from here? A. About ten or eleven miles, I should say; I don't know exactly.

Q17. When you first went to Lisbon what was your work? A. Machine tender.

Q18. What kind of machine was used there? A. Pusey & Jones; one machine mill.

Q19. That was a Fourdrinier machine? A. Fourdrinier paper machine, yes, sir.

Q20. About what speed was that machine running at that time? A. That is running from 237 to 358 feet.

Q21. That was in 1891? A. 1891.

Q22. And what kind of paper was made at that time? A. We made manila papers, and the latter part of '98 we made news.

Q23. In 1898 you began making news? A. Yes. We made news in 1898.

Q24. On that same machine? A. Yes; but we added another machine before that to it.

Q25. When was the second machine added? A. Two years later.

Q26. Two years later than the first one? A. Yes, sir.

Q27. And the second one was put in about what year? A. About '94, I should say; I am not sure of that.

Q28. Both machines were there in 1898 when you began making news? A. Yes, sir.

Q29. And both machines were used for making news? A. Yes, sir.

Q30. Was there any means of adjusting the table bars or the breast-roll on those early machines? A. Yes, sir.

Q31. What was that? A. There was a slot in the carrying bar that carries the tube roll. It could be lowered up and down. That was an adjustment the machine builders put on.

Q32. How much could that be adjusted? A. About two inches, I should think.

Q33. Would that be above level or below level? A. Either above or below; either an inch above or an inch below the level.

Q34. Was that adjustment used on that machine, or those machines, prior to 1898? A. Yes; I used it.

Q35. In what way did you use it? A. By raising or lowering the table.

Q36. Did you use it both ways? A. Yes.

Q37. Well, now, please state when you used it below the level and when you used it above—that is, for what purpose? A. On heavy manila papers we used the table lowered down on the breast-roll end; on the high percentage stock, or sulphite, we raised it up.

Q38. What was the purpose of those two positions? A. On the high percentage, the sulphite, I wanted to carry the water down from the slices, help to make up the sheet.

Q39. What was the purpose of lowering it? A. I wanted to keep the water in the sheet.

Q40. When it was lowered at the breast-roll that gave you an up hill pitch? A. Yes.

Q41. And when it was raised above, it gave you a down hill pitch? A. Yes, sir.

Q42. You are now speaking in reference to the construction of the machines as they were in 1898 and prior thereto? A. Yes, sir.

Q43. Were these machines rebuilt at any time? A. They were rebuilt in 1900.

Q44. By whom? A. Pusey & Jones.

Q45. What changes were made in them at that time? A. We put on a 65-foot wire. We had a 40-foot wire on, I think, at that time. We put on a 65-foot wire; put on extra parts; put on 15 more new driers, new back lines, and reels and winders.

Q46. What about the suction boxes; did you make any change? A. We added three more suction boxes.

Q47. How many were on the old machines as they were originally? A. Three.

Q48. You put on three more? A. We got three more.

Q49. What about the adjustment? A. We started No. 2 machine first. We started that October 7, 1900, and we started the wire level. We started the No. 1 machine October 24, 1900. The No. 2 machine was level, and No. 1 machine had a 1½ inch pitch on the wire. When they changed over into Pejepscot Paper Company, we called those machines No. 5 and No. 6 machines.

Q50. Then the machines that you have just referred to as Nos. 1 and 2 are now called 5 and 6? A. Yes, sir, 5 and 6.

Q51. Have you some memorandum there that you refer to giving the time when No. 1 and No. 2 were started? A. I have it here (producing small book).

Q52. What is that? A. Started October 7.

Q53. Will you read the memorandum? A. "Started No. 2 machine October 7, wire level, 1900; started No. 1 machine October 24, 1900; speed 545 feet; 1½ inches pitch on the wire."

Q54. What is that book that you have there? A. This is a memorandum book I have kept here for years for my private accounts, around the mill.

Q55. Is this a memorandum made by you at that time? A. Yes, sir, wholly.

Q56. And made in your own handwriting? A. Yes, sir; dated 1900.

Q57. Now, Mr. Dickinson, was this after these machines had been built over by Pusey & Jones? A. Yes, sir.

Q58. And did you at the time when they rebuilt these machines, say anything to them about adjustment of the pitch? A. I did. The erector asked me how I wanted the wire on No. 1 machine and I said to him I wanted to get all the pitch I could, down hill, that is, towards the coucher.

Q59. How much pitch was there? A. He raised it up all he could on the machine—the breast-roll and table bars.

Q60. Then you started this No. 1 machine with a pitch of an inch and a half? A. Yes, sir.

Q61. How did you get the other half inch? A. I used a shim under the post.

Q62. A shim, you say? A. A small block under the post to raise the wire up. We have the previous ones, '92 or '3.

Q63. As I understand you, after Pusey & Jones built over these machines, you started them up in October, 1900, the No.

2 machine with the wire level and the No. 1 machine with an inch and a half down hill pitch, an inch obtained by adjustment on the machine and a half inch by a block? A. Yes, sir.

Q64. And you started off No. 1 at 545 feet? A. We worked it up within a few days. The record I have of it at that time was 545.

Q65. That is, either on that day or a few days after that? A. Yes, sir.

Q66. What were you making at that time? A. News.

Q67. And you made news entirely on these machines? A. Yes, sir.

Q68. Did you later make any change in the pitch of the No. 2 machine? You spoke of that as having been started level. Have you any record of a later time? A. I have a record of it later. I put a two-inch shim under the wire June, 1902.

Q69. You have a record of that? A. Yes, sir.

Q70. How does that record appear? A. "No. 2 machine, put in two-inch shim under wire, June, 1902."

Q71. Is that in this same book? A. Yes, sir.

Q72. That is a record made by yourself? A. Yes, sir.

Q73. Do you know whether you used the adjustment provided by the machine, on the No. 2? A. I used all we had and then I used the two-inch besides.

Q74. That gave you an adjustment of how much altogether? A. I should say about three inches, pretty close to it.

Q75. What did you do with the No. 1 machine; did you make any change there? A. Later on I raised the No. 1 machine.

Q76. Now, have these machines ever been blocked up any higher than what they were at that time? What is the blocking under them now? A. We have—the No. 1 machine has got a three-inch block under it.

Q77. And the No. 2? A. No. 2 has got a three-inch.

Q78. And those both have three-inch blocking under them now? A. Yes, sir.

Q79. And you also make use of the inch adjustment on the machine? A. I have got all I can get on the machine besides the blocking.

Q80. And you have about four inches at the present time? A. Four inches, I should say. I haven't put an instrument on it.

Q81. But you have practically four inches? A. Yes, sir.

Q82. How soon after 1902 do you think it was that you got up to this four inch elevation with the three-inch blocking that you have now? A. I haven't any record of it, but I think

it was right around 1904 or '05.

Q83. You think it was as early as 1904 or '05? A. I think it was, yes, sir.

Q84. And has there been any change in the amount of elevation of those machines since that time? A. Not to my knowledge.

Q85. Then they are running now as they were in 1904? A. Yes, sir. They have had new blocking put on. They wore out. We have raised them and lowered them. We haven't touched them since we put in the larger three-inch block.

Q86. And they haven't any more elevation now than they had in 1904 or '05? A. Not to my knowledge.

Q87. No. Now, Mr. Dickinson, what was your object in giving the pitch to the wire on these machines after they were rebuilt when you were running news? A. I was troubled with cross waves on the sheet.

Q88. In what way did those cross waves affect the paper? A. Made heavy and light streaks in the paper.

Q89. Thick and thin places? A. Yes, sir.

Q90. How did you remedy that—attempt to remedy it? A. I experimented and raised the machine up.

Q91. What did that do? A. That seemed to smooth the sheet off. It seemed—why, the water seemed to cut the speed of the stock, picked up with the wire better.

Q92. And then what did you find about these waves after you gave this machine this amount of pitch? A. They were smoother, more uniform.

Q93. And did that seem to get rid of the cross waves? A. Yes. It stopped the cross waves and the make-up of the paper was better, more even.

Q94. What amount of head did you use in the flow boxes or back of the slices between, say, 1904 and '05? A. We always kept up full power on our slices—

Q95. That would be how much? A. Seven or eight inches.

Q96. How far down did this pitch on the wire extend? A. It extended down to the stationary bar at the first suction box.

Q97. The stationary bar supporting the suction boxes remained level? A. Yes, sir.

Q98. You didn't elevate those at all? A. Didn't touch them.

Q99. And the entire pitch was between the breast-roll and the end of the stationary bar? A. Yes, sir.

Q100. Did you have any trouble in keeping the wire in place over the suction boxes? A. No; didn't lift off. If I went any higher, the wire would lift off the box; but I didn't do it; it wasn't necessary.

Q101. Do you know whether you could go any higher or not without lifting? A. I haven't tried it. I got the result I was after and I stopped.

Q102. Do you know the length or the distance from the center of the breast-roll down to this end of the stationary guide roll, on the Lisbon machine? A. 19 foot 6.

Q103. Have you measured those recently? A. Yes, sir, measured them yesterday.

Q104. And then what is the length of the stationary rail? A. 8 foot 10.

Q105. You had a record there of 545 feet soon after those machines started in 1900. I wish you would go on and tell us about the speed at which those machines there at Lisbon have been operated? A. We run as high as 569. That was the highest speed.

Q106. And when was that? A. That was in 1900.

Q107. Did you keep up that speed? A. No; we had to stop. We had to slow down on account of our head, main line shafting, brickwork, worked loose, and we slowed down.

Q108. To what speed? A. To about, I should say, 550, I should say.

Q109. How long was that 550 speed maintained? A. Oh, it must have been a year or more.

Q110. Then what happened? A. We slowed down to 540—30 or 40. We are running that now. We have been up and down on speed.

Q111. Between what speeds do you vary now; how low do you go a year? A. We keep around 530, as near as we can.

Q112. Why do you have to go down from that at times? A. Our stock sometimes varies and we have to slow down.

Q113. Do you go very much above 530? A. Not lately, we haven't.

Q114. These machines have been in since 1900? A. 1900; no repairs made on them since 1900.

Q115. Any repairs lately? A. Yes, we have. We built over our Fourdrinier; that is, put in balanced tube rolls in our Fourdrinier parts.

Q116. When was that done? A. This year.

Q117. Does the fact that these machines have been in a long time,—does that have anything to do with the speed at which they can be run? A. Yes. Our wire parts were light and our tube rolls would jump, and we didn't think it safe to speed them up.

Q118. How long did you remain in direct charge there of the Lisbon Mills; that is, how long was it before you—I under-

stand now you are superintendent of all the mills? A. I came to Pejepscot in 1906, took charge of the Pejepscot and the Lisbon.

Q119. Since then you have had charge of both mills? A. Yes, sir.

Q120. And prior to 1906 you were not directly— A. Connected with the Pejepscot Mill.

Q121. —connected with the Pejepscot Mill? A. No, sir.

Q122. And did you know about the machines there? A. No.

Q123. When you came there in 1906, to the Pejepscot Mill and took charge of that, how many Fourdrinier machines did they have in there? A. Had two.

Q124. What about the pitch on the wires; were those wires pitched? A. They were pitched; just how much I don't know; two or three inches, I think.

Q125. Was any change made in them after you went there? A. Yes, I brought them up to the Lisbon Mills.

Q126. What is the pitch of them now? A. I don't know whether it is four inches; three and one-quarter to four inches, I think it is.

Q127. They may be a little above the Lisbon Mill? A. I think one machine is a little above the Lisbon Mill.

Q128. You think they were not quite as high as the Lisbon Mill when you came down there? A. No, they were not; I have raised them higher.

Q129. What was your purpose in raising those? A. We were having about the same trouble we were having at Lisbon, —the cross waves on the paper.

Q130. What was the effect of the change you made? A. By raising the Fourdriniers higher, the sheets smoothed out.

Q131. What was the arrangement there as to the extent of the pitch; was that down to the permanent rails only? I mean in the Pejepscot Mills, you have the same arrangement as at the Lisbon? A. About the same adjustment on the wires as the Lisbon Mills were.

Q132. And did that adjustment extend down to the same point? A. Down to the stationary rail.

Q133. Then, in neither mill have you ever had the permanent rail carrying the suction boxes elevated? A. No, sir.

Q134. Those have always been flat? A. Always been flat— the stationary rails have been flat; and we never touched them.

Q135. In the Pejepscot Mill have you had any trouble in keeping the wire on the suction boxes? A. No, we haven't.

Q136. Even though that pitch may be a little higher than the

other, you still— A. No trouble keeping the wire down. When the sheet is off the wire it pulls off the suction boxes; but when we get the sheet on it and the suction on it, it holds it down.

Q137. What is the speed at which these Pejepscot machines are maintained? A. 506 and 512.

Q138. Why are those not run faster? A. They are running as fast as we can on account of our power; we haven't any more power in our engines.

Q139. Is there anything about the machines themselves that would prevent running faster if you had more power? A. No. We have put in balanced tube rolls in those machines this summer, on the wire part.

Q140. Could you run faster if you had more power? A. Yes, we could run faster.

Q141. Of course you never have run faster,—you don't know how much faster? A. We have run around 520, but we haven't of late.

Q142. Is there anything about the plant at Lisbon that would prevent you from running the machines there any faster than they do now? A. Our head lines, our main shafts, anchor bolts have been broken off the brickwork and we have never repaired it.

Q143. Which are the heavier machines, the Lisbon machines or the Pejepscot? A. The Lisbon machines are the later built machines. The Pejepscot machines are the heaviest because they are wider.

Q144. What are the widths of the Lisbon machines? A. They are 84 inches wide and 102 inches wide.

Q145. What is the width of the Pejepscot machines? A. I think 144 inches wide and 126.

Q146. Now, Mr. Dickinson, how much paper do you make on those Lisbon machines? A. Make 50 tons on the two of them a day.

Q147. Fifty tons per day? A. Yes, sir.

Q148. Average that right along? A. Yes.

Q149. What do you make on the Pejepscot machines? A. 75.

Q150. Average that? A. Average 75, yes; but higher than that—we have had an average higher than 75 tons, in a month; but we average around 75.

Q151. Was this idea of giving a pitch to those wires by elevating the breast roll ends so as to get rid of the wave, was that something you worked out yourself or did you get it from somebody else? A. We were working out ourselves on those conditions there. We were in trouble; we were trying to get out

of it.

Q152. Have you seen any of the machines, any paper machines with 10 or 12 inch pitch to the wire? A. Yes, sir.

Q153. When did you first hear of such a pitch as that? A. I don't recall when I first heard of it.

Q154. Was it since you have given the present pitches to these machines at Lisbon and Pejepscot? A. Yes, sir.

Q155. Then the present pitches that you have at Lisbon and Pejepscot Mills were given to those machines by you before you ever heard of this 10 or 12-inch pitch on the other machines? A. Yes, sir.

Q156. Are the Pejepscot machines the same length as the Lisbon? A. Same length wires.

Q157. What about the distance from the breast roll to the suction boxes; would that be substantially the same? A. Very near.

Q158. Have you that distance? A. I had it; I had the measurement somewhere, but I don't believe I have it.

Q159. Well, it is about the same? A. About the same; all four machines are; those four machines are.

Q160. Same make? A. Same make. The Pejepscot were built in 1898 and we remodeled ours in 1900.

Q161. The Lisbon Falls were earlier machines? A. Yes, sir.

Q162. 1891? A. Yes, sir.

Q163. Rebuilt in 1900? A. 1900.

Q164. And the Pejepscot machines were put in in 1898? A. '98.

Q165. And have never been rebuilt? A. Never been rebuilt.

Q166. The Pejepscot Mills in 1898 and have not been remodeled? A. We have had new balanced tube rolls this year.

Q167. Has there been any change in recent years in the means or method of producing your ground wood? A. Yes, there is.

Q168. What change has taken place there? A. Why, I don't know what you mean by that. We try to make our ground wood as good as we can to make our paper run.

Q169. Has there been any change in the means by which you do that, in the last eight or ten years, and if so, when did it occur—any radical change, I mean? A. We are using the Hall Process Company's method now at our mills, the last couple of years.

Q170. Does that seem to give you better ground wood? A. We seem to have more uniform ground wood.

Direct examination closed.

CROSS EXAMINATION.

By Mr. Lyman:

XQ171. Have you recently measured the amount of pitch that there is on the Lisbon machines? A. Yesterday.

XQ172. What did you find it was? A. Three inches on the block and I should say about an inch on the machine, the adjustment there. I couldn't tell you because it is pretty hard to get at it.

XQ173. Somewhere between three and four inches? A. Yes, sir.

XQ174. The same on each of the two Lisbon machines? A. Yes sir.

XQ175. And at the Pejepscot you measured them also recently? A. Yes, sir.

XQ176. When? A. Yesterday.

XQ177. What did you find there? A. I think it was three and four-inch block there—three-inch block and four-inch block.

XQ178. One three-inch block and one four-inch block? A. I think that is what I found.

XQ179. Have you a memorandum of that? A. I had a memorandum yesterday. I don't know whether I mislaid it.

XQ180 (By Mr. Paul) That may have been four inches on one and five on the other? A. I measured them. About four inches, I think on the Pejepscot.

XQ181 (By Mr. Lyman) There is an adjustment of how much on that machine? A. I should say about an inch each way.

XQ182. Did you measure that? A. I didn't measure it, no.

XQ183. Do you know whether that is at the top now? A. It is up as high as we can get it.

XQ184. What time in 1906 did you come to the Pejepscot mill? A. Late in the fall.

XQ185. I understood you to say that the blocking on these Lisbon machines had been changed from time to time, new blocking being substituted as the old blocking wore out? A. After they wore down we changed them—the check on the wire where the foot rests on the old blocking; we had to renew the blocking.

XQ186. You have no means other than your recollection to say that the blocking that has been substituted was the same thickness as the blocking that was put in there when you first put blocking in? A. No.

XQ187. You have no record as to the extent of any blocking that you ever put in there except the one memorandum that you read showing the shim of two inches in 1902? A. I have an

old blocking we used away back in 1893 that our machinist made when we started to adjust the wire. I have that now. It was a small shim; went up to half an inch.

XQ188. I asked if you had any record in any of your memorandum books or anywhere else, or any books of the company, referring to the putting in of any other shim than that two-inch or the one-half inch. A. We kept those records ourselves. The company didn't keep any records of them.

XQ189. It would be simply by your personal record? A. Yes, sir; and the machine tenders knew of it at the time, that were running there.

XQ190. You looked through your books to see if you could find any such record? A. I have found one here—1900.

XQ191. That is the one you just read; no other than that? A. No, sir.

XQ192. You looked up for the year 1900 and found no such record? A. I have, no, sir.

XQ193. After you put that blocking in in 1902, did you ever use the adjustment on the machines; I mean did you ever change the adjustment on the machines? A. No, they were put as high as we could get them and we left them there.

XQ194. Now, you said that when you were using that adjustment, prior to the time you put in the shims, you ran the wire up hill with heavy manila paper and down hill when you were using a high per cent of sulphite stock? A. Yes sir.

XQ195. Why was that; what was the reason? A. The water would leave the sheet with high percentage stock near the slice and I wanted to carry it down.

XQ196. Through the suction boxes? A. Towards the suction boxes.

XQ197. You mean that the stock with a high per cent of sulphite was free? A. Was free, very free.

XQ198 (By Mr. Paul) Would absorb it, whereas the heavy manila stock was slow? A. Slow.

XQ199 (By Mr. Lyman) And the purpose for which you used the blocking was the same that led you to use the down hill adjustment on the two machines before you put in the blocking? A. I used the blocking when we built over to stop the cross waves we were having on the sheet.

XQ200. That was because in making news you were using freer stock? A. Ground wood.

XQ201. That is freer stock? A. Slower stock. The sulphite is the freer stock and the ground wood is slower stock.

XQ202. Well, I want to know whether the purpose that you had in mind in putting those shims under was the same purpose

that you had in mind when you ran the wire one inch down hill without a shim, or whether it was a different purpose? A. It was a different purpose.

XQ203. What is the head you carried on the machines at Pejepscot in the pond behind the slices? A. About six or seven inches.

XQ204. The same as in the machines at Lisbon? A. We vary some times one or two inches in the pond, according to how our stock is coming. If it is slow, we lower the pond, and if it is free we work it up, put a little more water in.

XQ205. But it varies between six and seven inches? A. Yes, sir.

XQ206. Never gets below that? A. Not to my knowledge, it doesn't.

XQ207. Does it ever get above seven inches? A. No. It will vary an inch or two in the pond. If you have your—some times you are troubled with slow stock and when we do we lower our pond. We have trouble getting the water out of the sheet. They have it in all mills.

XQ208. This matter of getting the water out of the sheet at the right time is a matter that is liable to give a good deal of trouble, isn't it? A. Yes, sir.

XQ209. Unless you know how to deal with it? A. Yes, sir. You have to get after your stock as quick as you find you are in that trouble.

XQ210. You spoke of having seen machines with ten or twelve inches pitch. Where did you see those machines? A. I just came back from vacation; I have been around among the mills. I saw them at Kenogami, and Jonquieres, Donnacona, St. Regis and Thorold. Over at Lyons Falls I think I saw it five or six years ago, on that new machine, electrical driven. I don't know how much they had—eight or nine inches.

XQ211. What company? A. Gould.

XQ212. Gould Paper Company? A. Yes.

XQ213. Have you seen high pitches anywhere else than those that you have named? A. Over to Palmers Falls.

XQ214. International Paper Company? A. Yes,. Walker, Hudson Falls, I think it was. I was over there with Mr. Coles, our president, Niagara Falls, when I was there.

XQ215. International Paper Company? A. Yes.

XQ216. You were there when? A. I was there three or four years ago.

XQ217. How much of a pitch did they have? A. I don't recall what they had.

XQ218. Do you remember when it was that you first saw

one of these high pitches? A. No; late years.

XQ219. Within five years? A. Yes, within five years.

XQ220. Had you heard that other mills were using high pitches before that at any time? A. I heard of Rhinelander in the west.

XQ221. When did you hear of that? A. At the time they were put in in the Berlin mills.

XQ222. And that was when? A. I don't remember, I can't recall; five or six years ago; I think they sent some men down there to put it on. I am not sure.

XQ223. Do you think that this three-inch blocking was in place before you heard of that pitch at Rhinelander? A. Yes, sir.

XQ224. Now, on the matter of speeds of these machines, you said that your record book showed a speed of 545 feet on No. 1 machine at Lisbon Falls in the year 1900; was that speed maintained? A. We went higher than that; we went to 569 in 1900.

XQ225. Was that speed maintained 569? A. No.

XQ226. What was the trouble? A. On account of our head line, brickwork loosened up. We slowed down.

XQ227. Did you get below 540? A. Yes. We went down to—not in that year. In later years we went down to 500.

XQ228. Was 500 the lowest speed maintained for any length of time at the Lisbon Mills since 1900? A. Why, in changing to some heavy orders we might have slowed down to 490. I am not sure.

XQ229. About 490 or 500 was about as low as you have run those machines since 1900? A. Yes, sir.

XQ230. How has the production of those machines varied? A. Why, the production on those machines for years hasn't varied, I should say. One time when we were running 550 feet we didn't make as much paper as we did when we were down to 500; our stock wasn't right.

XQ231. How has the production run? A. Very uniform now.

XQ232. I mean taking all the period between 1900 and the present time? A. It has been up and down.

XQ233. Between what limits has it varied? A. Why, from 47 tons to 50 tons, I should say; 52, not over that.

XQ234. Are there in the office here records of the speed of the machines during all that time and of the production on the machines? A. That they were going to look up. I haven't found it yet here.

XQ235. Such records were made? A. Yes, those records

were made.

XQ236. And sent to the office here? A. Yes.

XQ237. I understand that you told the Pusey & Jones people at the time the machines were rebuilt in 1900 that you wanted all the pitch you could possibly get and they gave you one inch above level? A. All they could get on the machines, whether that was one inch or seven-eighths. It was all they could get on the adjustment at that time.

XQ238. Have you any other memorandum on any of your books relating to these matters? A. I have some. I don't know whether it would be of interest to you or not.

XQ239. May I see them, please. A. There isn't any date on them, anyway. That one there (indicating on book)—those are pitches, seven-eighths down hill.

XQ240. What year is this? A. That is in 1900.

XQ241. What you show me is a memorandum "No. 2 machine seven-eighths inch down hill and No. 1 machine seven-eighths pitch down hill." A. Yes. I don't know whether that is all the pitch we could get in that machine. I have no date on it.

XQ242. You don't know what year that was made in? A No, I don't; but we started in that year.

XQ243. Those entries may have been made after 1902? A. I don't think so, no.

XQ244. They are in the same book as the 1900 entries are in? A. Yes.

XQ245. (By Mr. Paul): Those that you have spoken of are all that you can find? A. Yes.

XQ246. (By Mr. Lyman): What were you going to show me? A. I had this information (producing paper)—this was in the book too. There was the date of the book, if it is any use to you.

XQ247. Where was that entry about one and a half inch shim? A. In this book somewhere. (Witness examines book)—this one right here. Not a shim—pitch.

XQ248. That is the entry you quoted? A. Yes.

XQ249. Is there anything in that other book (indicating)? A. This is a later book; no.

XQ250. Does that follow on after this one? A. No. That is the one I had this measurement in; but I have some more of these books, but I couldn't find any more information about the pitch.

XQ251. (By Mr. Paul): You went through everything you had? A. Yes, I have some older books—1891.

XQ252. But nothing since 1900? A. No.

XQ253. (By Mr. Lyman): Is the blocking under No. 1 and No. 2 machines at Lisbon just the same at the present time? A. Yes, sir. There may be half an inch variation or something of that kind. They are intended to be about the same.

XQ254. Did that one and a half inch blocking stop those cross waves? A. It did for me. You see, our wires are narrow wires.

XQ255. Does that make a difference? A. Yes, it makes a difference. If you had 190-inch wire and an 84-inch wire, make some difference.

XQ256. Why does that make a difference on the matter of cross waves? A. Why, you have more body of water shooting on to your wire. The narrower it is you have it closed up more.

XQ257. Do I understand that the suction box suctions are level now on both machines? A. Yes, sir.

XQ258. That is true at Lisbon and at Pejepscot? A. Yes, sir.

XQ259. Of course you would like to get more speed if you could? A. Yes, sir.

XQ260. That is the prime thing you are always looking for consistent with getting— A. More product.

XQ261. —getting more product consistent with keeping a sheet that will get by? A. Yes, sir.

XQ262. How do you measure your pitch? A. I measure my pitch from the bed plate to the top of the table roll.

XQ263. Measure it at the breast roll end? A. High end and the low end.

XQ264. And subtract? A. Yes, sir.

XQ265. Do you know that the bed of your machine is level? A. It is level as any machine is, I think.

XQ266. Have you ever tried to find out whether it is level or not? A. Why, no. We level our wires carrying rolls on our wire—keep those level. They are under brick masonry and supposed to be set in cement or sulphur. I think they were laid in sulphur when they were put in; supposed to be level.

XQ267. What has been the effect of the improvement in your process of getting ground wood as far as the speed of the machines is concerned? A. We have had the Hall process.

XQ268. How has it affected the machine? A. Seems to give more uniform stock. We do not have a slow—a free stock.

XQ269. How does that affect the speed of the machines? A. Why, the formation is better on your wire.

XQ270. Does it enable you to run faster? A. No, we haven't run any faster with this process; in fact, we ran faster with the old process.

XQ271. Do you know whether at any time since 1900 you have run the No. 1 Lisbon machine with the wire level? A. No, we haven't.

XQ272. Do you know whether it ran up hill since 1900 at any time? No, all been down hill.

XQ273. How fast were you running with those machines before they were rebuilt? A. My record here shows it 358 feet. We got probably a little higher than that before we rebuilt them; thirty or forty-foot wires; they were short wires. We ran our news just as fast as we could at that time. We ran by water wheel then.

XQ274. The Pejepscot machines were put in in 1898? A. '98; they were put in by steam.

XQ275. They had 65 feet wires from the beginning? A. Yes.

XQ276. What speed do they make? A. They have been running right around 500 and 512 ten years or more. I have been down there ten years or more and they have been running about 500 and 512.

XQ277. No change in speed since you took hold of them? A. No, sir.

XQ278. Can you name us some of the employees who have been working on those Lisbon machines between 1900 and 1910? A. Machine tenders, you mean?

XQ279. Yes, machine tenders or superintendents. A. Mumford was superintendent; he is dead. Mr. Hall has taken his place. My brother is night superintendent there now—Thomas H. Dickinson. Mr. Glenfield is machine tender.

XQ280. What, was he there between 1900 and— A. He helped start the machine. The other men are young men that we set up. Mr. Casper helped start the No. 2 machine.

XQ281. Any other men that have been there, whether they are now employed by the Pejepscot Company or not, who were there between 1900 and 1910? A. 1900 and 1910? I don't know whether Killaway has been there as long as that or not. He is a machine tender. I have another brother, Samuel Dickinson, who is at Millinocket, who was there. Winn the back tender, has been there, an old hand. Curley, a machine tender; Whittier, a machine tender; he was a back tender; he has been there sixteen or eighteen years. I don't recall any others.

XQ282. The men you have named are men now employed by the Pejepscot Company? A. Yes.

XQ283. Are there any you can think of who left? A. Hollis,

XQ284. What is his name? A. William H.

XQ285. Where is he? A. He is with the Cleveland Wire

Works.

XQ286. Anybody else? What was his job? A. He was a machine tender.

XQ287. Anybody else? A. There was a man, I can't think of his name; he worked at Niagara Falls. He is over at Thorold. We haven't had very many new machine tenders come into our mills. The men are going out bettering themselves.

XQ288. Can you find out that man's name you were speaking of? A. I will find it. You are speaking of the Lisbon Falls?

XQ289. Yes. I was going to ask about the other mill? A. Well, the other mill I don't know; we have had so many people. It was a regular hobo mill, people going and coming; but at Lisbon Falls the men have been pretty steady. There have been a great many changes in the Pejepscot mills, until the last few years they have quieted down. We had a man come from Livermore Falls down there; I can't think of his name.

XQ290. Can you find out the names of these men from the payroll or otherwise? A. Yes.

XQ291. In order to save time, I will ask you if you will make a list of men who are employed on either the Lisbon Falls machine or the Pejepscot machines between 1900 and 1910. A. Machine tenders?

XQ292. Machine tenders or superintendents or assistant superintendents or foremen; or in cases where they are not with the company now, tell where they are.

Mr. Paul: If you know.

A. That would be a pretty hard thing for me to tell. Mr. Ball has gone up to Price Brothers. He used to be with us. Mr. Fielding is at Donnacona. He used to be with us. Mr. Chopin I think is at Abitibi. I am not sure about that. They have had quite an experience with the Pejepscot Paper Company about their help at the Pejepscot mill. When they first started they changed, just like all mills starting.

XQ293. Well, will you please get up such a list or have some one do it? A. I will see if I can do it for you. You want from—

XQ294. 1900 to 1910. A. Machine tenders?

XQ295. Machine tenders or foremen or superintendents. Cross examination closed.

RE-DIRECT EXAMINATION.

By Mr. Paul:

RDQ296. Mr. Dickinson, on the machines at Lisbon is the top of the breast roll, the highest point of the wire, at the breast roll end? A. No. The tube roll is a little higher than the

breast roll.

RDQ297. How much higher? A. We carry it a little higher, perhaps a quarter of an inch, three-eighths of an inch. It runs up hill so as to get your deckle edge, lap on the tube roll. I don't know exactly how much it would be; probably a good quarter of an inch higher than the breast roll. I think our wires run up hill.

Re-direct examination closed.

Mr. Paul: You will waive signature of this witness?

Mr. Lyman: Yes.

FRED PHILANDER HALL,

a witness produced on behalf of the defendant, being first duly sworn, deposes and says, in answer to questions by Mr. Paul, as follows:

Q1. What is your full name? A. Fred Philander Hall.

Q2. Where do you live? A. Lisbon Falls.

Q3. What is your work at the present time? A. Paper maker.

Q4. By whom are you employed? Pejepscot Paper Company.

Q5. And in which mill? A. Lisbon mill.

Q6. How long have you been employed in the Lisbon mill? A. Since 1892.

Q7. What has been your work during this time? A. Well, I went to work for the company as a back tender, and I went from back tender to machine tender, machine tender to night superintendent, from night superintendent to day superintendent.

Q8. You are familiar with the two Fourdrinier machines that are employed there at that mill? A. Yes sir.

Q9. And have worked on those machines? A. Yes, sir.

Q10. You are familiar with the fact that the wire has some incline or pitch to it at the present time? A. Yes, sir.

Q11. How long has the present pitch been used? A. Well, to my best recollection, we put the present pitch on those machines right around 1902 or '03, in that vicinity; I have no record of it.

Q12. You have nothing but your memory to rely upon? A. That is all.

Q13. It has been there a long time? A. A long time.

Q14. Has there been any change up or down from the present amount of pitch? A. No, sir.

Q15. What about the blocks; has there been any change in

the blocks; have the blocks been removed at any time? A. Not as a general thing, no.

Q16. Have there been any new blocks put in in place of others? A. No, unless in renewing some of the machinery the pieces would be a little longer than the others; instead of cutting the piece off we would plane off the blocks, something of that sort; not to change the pitch at all.

Q17. The same pitch has been maintained? A. The same pitch has been maintained.

Q18. Since about 1902 or '03? A. I should say so.

Q19. What about the pitch before that; was there any pitch on the machines before that? A. Before we went to making news paper we used to have the pitch that came on the machine you know on the Fourdrinier, that we used to adjust; that is practically all.

Direct examination closed.

CROSS EXAMINATION.

By Mr. Lyman:

XQ20. What was the extent of possible change that you could get out of that adjustment that came on the machine? A. Why, as near as I can recollect, it would be perhaps an inch or an inch and a half; just a small slot in the framework that you could raise up or down.

XQ21. Would that allow you to raise the breast roll above the level or put it below the level? A. It didn't have anything to do with the breast roll; it just had to do with the table rolls. It allowed us to drop the upper end of the table rolls to the lower level.

XQ22. It didn't allow you to raise the table rolls above level? A. No.

XQ23. Didn't you have anything to do with the breast roll? A. No.

XQ24. Are these blocks that are in at the present time the first ones that were ever put in that machine? A. So far as I can recollect they are the first ones.

XQ25. What is the thickness of these blocks that are under there now? A. Three inches, I should say.

XQ26. Now, what was the reason that you ever wanted to run that wire up hill? A. Run it up hill?

XQ27. Yes. Did you know of its ever being run uphill, that is with a little slope from the breast roll? A. Yes; that was in early years when we used to be making heavy manilas.

XQ28. What was the idea? A. We thought we would get more water out of a sheet.

XQ29. By keeping the stock a longer time on the wire? A. Yes.

XQ30. What is the idea of running it with a little pitch down hill? A. Carrying the water nearer to the suction boxes.

XQ31. So that the water wouldn't drain out so fast? A. Yes.

XQ32. Do you know whether the blocks underneath have been changed, new ones substituted for old ones from time to time? A. I am pretty positive they have not been.

XQ33. Are you sure about that? A. Pretty sure.

XQ34. Mr. Dickinson said that they had been changed from time to time as old ones wore out. A. Well, other than what I have just stated, in renewing some of the machinery that comes different lengths some times. For instance, a post that sets upon the foundation up to the bar some times will come half an inch and some times three-quarters of an inch longer than the old one we are taking out, and instead of cutting off the post we plane off the block or make a new block and put it in place.

XQ35. Well, the blocks have been changed from time to time? A. Only in that instance, that I have any recollection of.

XQ36. Well, in that instance that you have a recollection of, was there a new block substituted for the old one? A. Some times, and some times the old one planed off to meet the requirement.

XQ37. You wouldn't have anything except general recollection to lead you to think that the present blocking was the same thickness that it was in early days? A. No, I have no records of any of that.

XQ38. Never have seen a higher blocking under that? A. No.

XQ39. You are familiar with the Pejepscot mill? A. No, nothing; only go down there once in a while and look around; I never worked there.

XQ40. You have been at Lisbon Falls since 1892 all the time? A. Yes.

XQ41. What has been the speed at which those machines are run since 1892? A. Since 1892?

XQ42. Yes; when were they put in? A. The machine that we call No. 6 was being erected in 1892. I went to work on it as a back tender; helped started it up. The other one was running at the time and I don't know when that was put in operation.

XQ43. They are known now as Nos. 5 and 6? A. Yes.

XQ44. When you first went there they were known as Nos. 1 and 2? A. Yes.

XQ45. No. 1 is now No. 5? A. Yes.

XQ46. And No. 2 is now No. 6? A. Yes.

XQ47. Did you go there in 1892 or 1902? A. 1892.

XQ48. What was the speed of these machines in 1892? A. Well, they varied, all kinds of speeds—the different heft of orders we were running. We were making them at that time almost everything and heavier sheets. Heavier orders we would run the machines slower, and our speed as I recall it, ranged from anywheres from 150 to 200, to 300.

XQ49. When did you begin to make news on those machines? A. In 1900, I think, when we built them over.

XQ50. And at what speed did you start them off then? A. I don't recollect.

XQ51. What speed are they running now? A. At the present day?

XQ52. Yes. A. About 530.

XQ53. How long have they been running at 530? A. With the exceptions of instances when we would be short of stock, or something like that kind, or high water, been running 525 to 530 for the last three or four years, I know about.

XQ54. And prior to that how much did they run? A. I don't recall just what they were running, the speeds at that time.

XQ55. Was it as much as 500? A. I should say so, sure.

XQ56. Should you say it has always been as much as 500 since 1900? A. No, I wouldn't say; I can't recollect that.

XQ57. You don't know whether it was as much as that? A. No.

XQ58. Did you put in those blocks originally when they were put in there? A. Did I?

XQ59. Yes. A. No.

XQ60. Who did, do you know? A. No.

XQ61. Are the blocks made of wood? A. Yes.

XQ62. Were you a machine tender on the machine at the time when the blocks were put in? A. I don't recollect just exactly as to that. I took Mr. Mumford's place as night superintendent and I don't just recollect what year that was.

XQ63. When these blocks were put in, were you night superintendent? A. I don't know.

XQ64. You don't know what your job was? A. No.

XQ65. You don't know whether you were night superintendent or day superintendent? A. I wasn't day superintendent; I have been day superintendent but a short time.

XQ66. But you can't tell whether you were night superintendent or machine tender or back tender? A. I think they

were put in prior to my being night superintendent.

XQ67. When did you become night superintendent? A. I haven't a recollection of that.

XQ68. About when was it you became night superintendent? A. I couldn't say.

XQ69. Can't give it within five years. A. Yes, I guess I could get within five years of it. I should say it was about seven, eight years ago.

XQ70. But you don't feel sure that these blocks were put in before you became night superintendent? A. I have an idea they were.

XQ71. Well are you sure? A. No.

XQ72. Do you know whether these blocks were put in under No. 1 and No. 2 machines at the same time? A. I don't know.

XQ73. Do you know who the machine tenders were at the time the blocks were put in? A. No, I don't.

XQ74. Haven't much of an idea when the blocks were put in? A. No.

Cross examination closed.

Mr. Paul: You will waive signature of this witness?

Mr. Lyman: Yes.

Printing of notary's certificate waived.

UNITED STATES DISTRICT COURT,
DISTRICT OF MAINE.

EIBEL PROCESS COMPANY,
Plaintiff,
vs.
MINNESOTA & ONTARIO POWER COMPANY,
Defendant.

Depositions taken on behalf of the defendant in the above entitled cause before Miss A. G. Nixon, special commissioner, commencing on Friday, December 28, 1917, at 1 o'clock P. M., at the office of Heard, Smith & Tennant, 607 Old South Building, Boston, Mass., pursuant to stipulation and agreement of counsel.

Appearances: On behalf of the plaintiff, Mr. Harrison F.

Lyman. On behalf of the defendant, Mr. A. C. Paul and Mr. M. M. Moore.

And thereupon the following proceedings were had:

BYRON F. HORNE,

a witness called on behalf of the defendant being first duly sworn, deposes and says, in answer to questions by Mr. Paul, as follows:

Q1. Please state your full name? A. Byron F. Horne.

Q2. What is your age? A. Sixty-six.

Q3. Where do you reside? A. Lawrence—well, where I reside, Andover, Mass.

Q4. And where is your place of business? A. Lawrence, Mass.

Q5. With what business concern are you connected? A. J. H. Horne & Sons Company.

Q6. Is that a corporation? A. It is.

Q7. Where is its place of business? A. 109 Blanchard St., Lawrence, Mass.

Q8. What is its business? A. Manufacturers of paper mill machinery.

Q8. How long has this concern, either the corporation or its predecessor in business, been engaged in this line of manufacturing? A. Paper mill machinery? About 50 years; that is, no, not—it is 50 years from the start. My father started it.

Q10. Mr. J. H. Horne is your father? A. J. H. Horne was my father.

Q11. Is he living? A. He is not; he is dead.

Q12. Have you a brother connected with the business? A. I have a brother J. E. Horne.

Q13. And is he actively connected with the business? A. Yes, he is treasurer of the company.

Q14. What is your office? A. I am president of the company.

Q15. How long have you been connected with this business? A. Ever since it was formed.

Q16. And how long has your brother been connected with it? A. Why, he has been connected with the company ever since the company was formed.

Q17. And how long ago was the company formed—about how long? A. About thirty years ago; a little strong thirty years ago, the company was formed.

Q18. You were connected with the business prior to the forming of the company? A. Yes, it was my father, originally, and I went with him, and he was J. H. Horne, and J. H. Horne

& Son, you know, and then we formed the corporation and took my brother in, or two brothers, rather.

Q19. Mention, in a general way, some of the different kinds of paper mill machinery that you manufacture? A. Why, we manufacture everything in a paper mill.

Q20. And that includes Fourdrinier machines? A. Machines, beating and washing engines, refiners, paper cutters and pumps, shafting.

Q21. Did you manufacture any Fourdrinier machines for the Bayless Company of Binghamton, New York? A. We did.

Q22. Where were those machines installed? A. Austin, Pennsylvania.

Q23. What was the first thing that came up in connection with this order; how did the matter come to your attention? A. If my recollection serves me right, Mr. Bayless wrote to us saying that he was going to build a paper mill, and asked us for quotations on two machines, something of that kind. I don't remember just exactly the words he used.

Q24. Have you the original letters from Bayless here? A. I think they are here, yes, sir. They were brought in here.

Q25. Will you look at the papers I now hand you and state whether those are the original letters from Bayless, relating to this matter? A. Yes, that is George Bayless' signature. That is the original letter, I should say. (Reading letter.)

Q26. Is that the first letter? A. That is the first letter from Mr. Bayless.

Q27. What is the date? A. December the 14th, 1900.

Q28. Now, generally, do these letters which you have there represent—are those the original letters from the Bayless Company relating to this matter? A. These are the original letters from Mr. Bayless in regard to these machines, these two machines.

Q29. And are you willing that those should be submitted to counsel for inspection? A. Certainly.

Q30. I don't think it is necessary to put them in. Now, what was your practice during this period covered by the correspondence with the Bayless Company as to retaining duplicates of the letters that you sent out? What do you use, letter books? A. We use letter books.

Q31. Letter press books? A. Yes.

Q32. And was it your practice to make copies of all your letters in those books? A. Yes, sir.

Q33. Now, have you here the letter press books containing your correspondence relating to this matter? A. I think they are here. I sent for them and I haven't seen them, but I think

they are here.

Q34. I call your attention to a series of letter books and ask you to refer to them, and to state whether these are the letter press books of your company— A. Yes, these are.

Q35. —covering the period referred to? A. Yes, these are ours. You see our initials on there, and this book—this is July, 1900.

Q36. Well, that begins prior to the first letter from Bayless? A. Yes, probably the first letter is in here somewhere; what was that, December?

Q37. December. A. Here it is, way over here December. I happened to open right to it.

Q38. Now, you have produced— A. I think that is the answer to it.

Q39. Well, the letter book that you refer to is No. 31? A. 31, yes.

Q40. And you have here, in addition— A. There is the reply to the—

Q41. —the books numbered 32, 33 and 34; is that right? A. Yes.

Q42. And 34 covers correspondence down to and including February 19, 1902, does it not? A. That is right, February the 19th, 1902. That isn't to Bayless.

Q43. Yes, but I mean, it covers the correspondence down to that point? A. Yes, that covers the correspondence down to February 19, 1902.

Q44. So that all of your correspondence with the Bayless Company would be represented, would be shown by the original letters produced from the Bayless Company, and the letter press copies of your letters that are in these four books? A. Yes, sir.

Q45. Now, have you had made for convenience copies of these letters from your letter press book, covering this period from December of 1900 to July, 1902? A. The original letters have been copied.

Q46. And they are in this bunch that I now hand you? A. This is the copy of the letters from the original books.

Q47. Yes. These are copies of letters to Bayless Pulp & Paper Company from J. H. Horne & Sons Company, December, 1900, to January 4, 1902, and these are copies of the letters that are in the letter press book? A. Yes, sir.

Mr. Paul: I will ask that the series of letters from the Bayless Pulp & Paper Company to J. H. Horne & Sons Company, produced by the witness, be marked for identification, "Defendant's Exhibit V-2," and that the series of letters in reply, from J. H. Horne & Sons Company to Bayless Pulp & Paper Com-

pany be marked for identification, "Defendant's Exhibit V-3."

I desire to state to counsel that I submit this correspondence to him and that at the close of the testimony I will offer in evidence any of the letters that may seem advisable to counsel for either party to have produced at the trial, and I should prefer to use the copies of the letters produced by the witness instead of the letter press books, with the understanding that the copies may be compared with the letter press copies.

Q48. Now, Mr. Horne, following the receipt of this letter from the Bayless Company, or Mr. Bayless, to which you have referred, what, if anything, did you do? A. I went immediately to see him. I think at first we wrote a letter to him. I think my brother wrote a letter to him.

Q49. That letter would be in this— A. That letter would be the first letter, in answer to his letter.

Q50. Where did you go to see him? A. Binghamton, New York.

Q51. And what transpired there at Binghamton between Mr. Bayless and yourself? A. Why, we talked over the machine. He told us what he wanted. In the first place, he wanted 42-inch diameter driers, and those we didn't make, and I told him that we made 48-inch. And finally he said very well that he would accept the 48-inch diameter. Well, he did accept it. So we went ahead; and then he wanted to know what we had for an arrangement on a machine on the shake, and I told him what we had; we had just got out a new patent a short time before, and he said that he had been to see the Moore & White patent, and he had also seen what was known as the Kutter, Trowbridge patent; that is, a Black & Crawson, and he didn't like either of them. And then he went on to explain that he had got a tramp paper maker that came along there a while ago and come into the mill, and made an arrangement whereby that he would raise his wire at the breast roll and give it a pitch so that the water would come out more freely than as if it run level. Heretofore, all Fourdriniers had been on a level, and he wanted to speed up his machine and get more paper, and so he wanted to know what I thought of it. And so we talked the matter over there a while. His father was there and his brother was there. And I said I would go home and talk it over with my people, and get him up something; that I wanted to build his machines; that was my business, was building machines, and I would go home and look it up. So I went home, and I put it before my brother or rather, Mr. Barrett, which is our foreman-superintendent, in the machine shop, and told him what Bayless wanted. And upon that, they went to work and con-

ceived this idea of raising and lowering the wet end right near the breast roll of the machine. And then we—I think I showed that to Mr. Bayless, and he said that was just what he wanted, and so we went ahead and made his machines. Those were the two first machines that we made, with that raising and lowering device.

Q52. Now, at the time of that first conversation, did Bayless say anything to you about the amount of adjustments he wanted for the breast roll end of the machine? A. Yes, he did. He said that he thought he would like to have it six inches up and two inches down.

Q53. Six inches up. Just what does that mean? A. Above the level; six inches above the level.

Q54. That is, capable of adjustment six inches above the level? A. Capable of adjustment six inches above the level; six inches above the level and two inches below the level.

Q55. Following these conversations with Mr. Bayless, was any contract made for these machines? A. Yes, the contract was written out—the contract was written out. I don't know but the contract—I don't know but I carried the contract with me. I don't know but what I did. I don't remember the date of that.

Q56. And there was a written contract? A. Oh, yes.

Q57. Will you look at the paper which I now hand you and state what that is? A. I should say that that was the original contract. That is the original contract.

Q58. What is the date of that contract? A. January 18, 1901.

Q59. Where was it signed? A. I don't know as it is signed (examining paper). It doesn't seem to be signed.

Q60. And it is a specification? A. This is a specification, yes.

Q61. And not the contract? A. Well there would be another one of these somewhere. They are always in duplicate.

Q62. This is headed, "Specifications for one 136 and one 114-inch Fourdrinier paper machine." Now, are these the specifications— A. Those are the original specifications for the building of the machine.

Q63. And do you know whether there was any signed agreement for the building of a machine, or was that by correspondence? A. I think there was something about a letter. I think that was done by mail. I think you will find it in the letters, if you have got it there.

Q64. What is the date of the specification? A. Now, it says here, "For price and terms see our letter of January 19, 1901."

These specifications were submitted to him, you know, and he made some changes with a pencil, and then he accepted them. I think there is a letter there that I had.

Q65. I call your attention to the letter of January 19, 1901, from the J. H. Horne & Sons Company to the Bayless Pulp & Paper Company, and ask you if that is the letter referred to? A. That is the letter referred to.

Q66. These specifications seem to have a number of changes and interlineations, some of them in pencil. By whom were those made? A. Well, they were probably made by Mr. Bayless. We made out the specifications and I carried them out to him and then he changed them as he wanted to.

Q67. And did you take these specifications to him or were they sent with this letter or do you remember? A. I have an idea—I think those specifications—I think I took those specifications with me when I went out there, although I may be mistaken; not the first time. I think it was the second time. I won't be sure whether I took them or whether they were sent. I couldn't say.

Q68. Well, now, when were these notations made on the original specifications? Was that before the machines were built? A. Oh, sure, yes, sir.

Q69. And these were in the specifications at the time the machine was built; is that right? A. The machine was built as the changes are on there.

Q70. Yes, according to these changes in the specifications? A. According to the changes made, Bayless wanted, the machines was built.

Q71. And there have been no changes in these since those machines were built? A. No, sir, not to my knowledge.

Q72. Was any reference, do you recall, made to this new device that you got up to meet Bayless' requirements of an adjustment to the breast roll end of the Fourdrinier machine? A. Nothing any more than that was put down there that after we had submitted and told Mr. Bayless what we were going to do, he said he accepted it, and that was put on these specifications "new up and down motion."

Q73. That was written on? A. That was written on.

Q74. And that was done before the machines were built? A. Oh, it was done—oh, yes, long before the machines were built. When we took the order, you might say, at the time.

Q75. Before you completed the arrangement to build the machines, this was put on? A. Before we started any part.

Q76. You had, however, submitted the idea to Mr. Bayless, before that time? A. Yes.

Q77. What did you do in reference to getting up drawings, if anything, for this new up and down device, up and down motion device? A. Why, our draftsman drew out sketches.

Q78. By whom was this device gotten up, by what members of your company? A. Why Mr. Barrett, I suppose, would be the man. I turned it over to him. He is our foreman of the machine shop, and I turned it over to him, and told him what I wanted, that is, what Mr. Bayless wanted, and I turned it over to him, and he and my brother got to work and got up that device for raising and lowering the shake.

Q79. Was any drawing made showing that adjusting device? A. There was.

Q80. Have you the original tracing here? A. I think there is the original tracing there.

Q81. Is this the drawing that you refer to? A. That is the original tracing for the Bayless machine.

(Counsel for the defendant requests that the specifications produced by the witness be marked "Defendant's Exhibit V-4" and the drawing be marked "Defendant's Exhibit V-5.")

Q82. I ask you to examine the blue print which has been marked "Defendant's Exhibit V," and state whether that is a blue print from this same tracing that you produced? A. That is a blue print from this tracing.

Q83. That is, the blue print marked "V" is a blue print from the drawing marked "V-5"? Is that right? A. Yes, sir.

Q84. Do you care to let this tracing go out of your possession? A. We hate awfully to lose tracings, and the blue print is an exact duplicate of it, taken from it.

Q85. May the tracing be subject to inspection by counsel for either side at any time? A. Certainly, it may be; but the blue print is just exactly as good. If we should lose that tracing, why we are gone. Suppose Mr. Bayless wanted anything done to his machine now, we have got to go right back to this original tracing.

Q86. I understand. A. A tracing is something we keep in a safe or vault.

Q87. Have you any other original drawing here, representing any of the parts of this adjusting device for the Bayless machine? A. That paper there is the original drawing.

Q88. Of what part? A. Of the shake of the arrangement on the end of the up and down motion.

(Counsel for the defense asks that the drawing on manila paper, referred to by the witness, be marked "Defendant's Exhibit V-6.")

Q89. Now, just what parts of this device are shown in this

drawing "V-6," Mr. Horne? A. Why, it merely shows the posts. Here is the post which is shown, here.

Q90. That is, the posts at the adjustable end of the Fourdrinier? A. At the adjustable end, yes.

Q91. And are these the working drawings of that part? A. Yes, this was got out to make the pattern by, to draw it out for the pattern maker to make a pattern.

Q92. Did you ever have a tracing of this drawing? A. Well now, I don't know whether we had or not, but you asked for the original drawing, and there is it. I presume there is a tracing of it. I presume there is.

Q93. Were these machines constructed in accordance with these drawings that you have produced, Exhibits "V-5" and V-6"? A. Yes, sir.

Q94. How soon were these machines delivered—about how soon? A. Why I should say it was about six months from the time that they were—if my recollection is right, it was somewhere about six months, along in July, as near as I can recollect.

Q95. Of 1901? A. Yes, sir. No, no—yes, six months from the time the order was taken, about that.

Q96. And which machine was delivered first? A. I think the largest machine was delivered first. I think it was.

Q97. These machines were alike, except in width? A. In width, yes. One was 114-inch wide, and one was 136, and I think that the 136 was delivered first, although I am not quite sure.

Q98. I suppose this correspondence will show? A. Sure, the correspondence will show.

Q99. Were you ever out there at Austin? A. Yes, sir.

Q100. When were you there? A. I was there—I think my man was setting up these machines. It was before they started.

Q101. Did you ever see these Bayless machines in the mill in Austin after they were in operation? A. No, sir.

Q102. Have you ever been there since the time you refer to when they were being set up? A. No, sir, I don't remember that I have ever seen those machines since they were started.

Q103. These conversations that you have referred to that you had with Mr. Bayless, those were all at Binghamton? A. All at Binghamton, yes.

Q104. And which Bayless were these conversations with? A. George. George C., I think it is, in the office at the time. His father and brother was there, but George was the man that was doing the business. I don't know whether they were connected with him or not, I couldn't say that, but George is the

man that I was doing business with, and the conversation was all with George Bayless.

Q105. Did Mr. Bayless say anything as to why he wanted this amount of adjustment on these machines? A. If my memory serves me right, he claimed, as I said in the first place, that he had got a paper maker, or a tramp come along there that had seen a machine somewhere, I don't know where, that had raised it up, where formerly it had run level, and that it worked better, or worked freer. The water went down on to the stock that he was using, and it made a better shake and at the same time, of course, he could run faster.

Q106. And was that the purpose why he wanted this adjustment on the new machine? A. Practically, yes.

Q107. Did he say anything about the kind of paper that he expected to make, whether there was more than one grade, or anything of that sort? A. Why, he wanted to make a better grade of paper than that he had been making. He had an old machine there that Noah brought over in the ark, I guess. It was all gone, so he told me, and he wanted to get up a good machine, and he wanted to make—well, you might say, a bogus manila out of spruce wood, all wood paper.

Q108. Did you know of any accident to the Bayless mill, that occurred after these machines were installed? A. Yes, they had a serious accident when that dam give way.

Q109. Did your company do anything in respect to building over or repairing these machines, at that time? A. Yes, sir.

Q110. What did you do? A. Why, when the dam went out Mr. Bayless wrote to us, and I sent our Mr. Davis, who was our salesman, that is, took my place after I give it up—I used to do all the selling of the machines—and I gave it up to him. He went out there and saw the condition, and had the stuff come to Lawrence, and we took and fixed it all up, and practically we made a new machine out of it. It was very much wrecked.

Q111. Was there any contract made at that time? A. I think so. I think Mr. Davis got up a contract with Mr. Bayless.

Q112. Was that in writing? Was that contract in writing? A. Well, it was typewritten, I think.

Q113. Please look at the paper that I now hand you and state what it is. A. Yes, that is the contract that Mr. Davis made with Mr. Bayless, to rebuild the machine after it went through the flood.

Q114. By whom is this contract signed? A. Why, it is signed by—I signed it as president for our company, and George Bayless signed it president—or signed it just George Bayless.

This was done for George Bayless. At that time, on account of some controversy that was out there, he signed it straight George Bayless.

Q115. But that is the contract under which this machine was repaired? A. That is the contract, yes.

Q116. Were these repairs for that machine made substantially in accordance with this contract? A. Yes, sir, just according to that contract.

Q117. Had anyone from your company been there to Austin, before this specification for the contract for the repairs was made? A. Mr. Davis went out there, yes, sir.

Q118. What was done with the parts of the original machine? A. Why, those that were broken were sent to Lawrence and we fixed them up and sent them back. The ones that was all right we left there, of course; didn't ship the whole machine back to Lawrence.

Q119. You made some new parts? A. What was broken we made new.

Q120. As these machines were originally constructed, Mr. Horne, how much would the breast roll be elevated above the level of the guide roll? A. How much elevated above the level?

Q121. Yes. A. Six inches.

Q122. And how much could it be depressed below? A. Two inches.

Q123. Then the total movement was eight inches? A. Yes, six above and two below. That was Mr. Bayless' idea of what he wanted, and we made it according to his idea.

Q124. When the breast roll was adjusted six inches above the level, how far down would the wire be inclined? A. Why, it would go down to the end of the stationary rail, right here.

Q125. To the end of the stationary rail? A. Yes.

Q126. The suction boxes were on the stationary rail? A. The suction boxes were on the stationary rail; couldn't raise it up.

Q127. It did not raise the portion of the stationary rails carrying the suction boxes? A. No, sir.

Q128. But the incline would be of the shake rails? A. Yes.

Q129. Down to the pedestal near the center of the machine? A. Well, beyond the center; beyond the center.

Q130 The shake rail— A. Down to the suction boxes, nearly to the suction boxes. There is two rails there.

Q131. The shake rail is longer than the permanent rail? A. Yes; that is what we call the permanent rail.

Q132. You call the rail from the center pedestal which carries the suction boxes a permanent rail? A. Yes.

Q133. What do you call the rail from that pedestal up to the breast roll? A. We call it the shake rail. That is the one that shakes, and that one stands still.

Q134. Mr. Bayless has testified in this case that he had some blocks put under this center pedestal, where the shake rail and the permanent rail come together. Do you know anything about that? A. I do not.

Q135. You had nothing to do with it? A. I had nothing to do with that; know nothing about it.

Q136. I notice that there is attached to this contract that you produced, which I designated "V-7," that is, the repair contract, two yellow paper sheets with some pencil notations thereon. In whose handwriting are those, do you know? A. Those are Mr. Davis.'

Q137. And do you know what this memoranda represents? A. Why, I don't know personally. Probably this is the changes in Bayless' machine.

Q138. Mr. Davis will know about that? A. Mr. Davis will know all about that. He is the man that made those. He went out and looked after that job, and he knows all about it. Personally, I know nothing about it.

Q139. This contract refers to "Build new end posts, new style, for supporting one end of shake and stationary rails, with shake rail section working on pin, for raising and lowering breast roll end; use without the cross brace." What is referred to by this post being new style? A. Why, this is the new style post, here.

Q140. Well, this refers to the post at the end of the shake and stationary rail? A. I don't know. I don't know about that. I couldn't say. I don't know anything about that.

Q141. Was there any change in the style of post at the breast roll end of the machine? A. No, sir, there was not.

Q142. This contract refers to "new Fourdrinier supporting posts at breast roll end, with horizontal compensating springs." Do you recall whether there were two posts furnished at that end of the machine? A. My best recollection is that there was only one; that one of them was all right, and we only furnished one. I think—my best recollection is that this post was all right, but the other, when those logs come down there, it took the front of that machine right down, and it broke the back. Now, that is the best of my recollections, that there was only one post furnished.

Q143. Has your company continued to build machines like this Bayless machine, represented by the blue print "Exhibit V"? A. In what respect?

Q144. Have you continued to build this machine? A. You mean in regard to the—

Q145. In regard to this adjusting device on the Fourdrinier end. A. Never have built anything different since we built that.

Q146. What is the length of the slot in the Fourdrinier posts through which the hook extends that holds the roll and connects with the cable, as shown by the drawing, "Exhibit V-6"? A. It is 18 inches.

Q147. Is it so marked on this? A. It is shown right there, 18 inches, I think.

Q148. Now, that 18 inches refers to what slot? A. The slot up and down here, that this roll goes up and down.

Q149. That is, where the end of the roll is connected with the cable? A. Yes, sir.

Q150. Then, as far as this portion of the device is concerned, the slot is capable of permitting an 18-inch movement to the roll? A. Yes, sir.

Q151. A total movement of 18 inches? A. Yes, sir; can make it anything, as far as that is concerned.

Q152. Now, with this device, such device as shown in the drawing for Bayless machine, "Exhibit V," what amount of adjustment, or what change, if any, would be required to change the amount of adjustment which you say that Bayless required for his machine, that is, six above and two below, what change would you have to make to alter that? A. Why, you would have to make this cable shorter and the screw longer.

Q153. That will do that? A. By making that cable shorter and the screw longer, you can get any distance you mind to. There is a cable that runs from here to there, and we have those cables different length, you know, and by making it shorter and by making that screw longer you can make it any distance you want.

Direct examination closed.

CROSS EXAMINATION.

By Mr. Lyman:

XQ154. There is an item here on this contract for the repairs of the No. 1 machine at the Bayless plant which appears on page 4, as follows: "Five new yokes for old post brackets." What does that refer to? A. I don't know. I don't know. You will have to ask Mr. Davis about that. He knows all about it. I don't know anything about it.

XQ155. This contract— A. No, I don't know anything about that.

XQ156. This same contract, under the heading, "Fourdrinier plant," on page 1, includes this item: "New Fourdrinier supporting posts at breast roll end, with horizontal compensating springs." What does the "horizontal compensating springs" refer to? A. I don't know that. I don't know anything about that. You will have to refer all that to Mr. Davis. He took that contract, and Mr. Davis is the man that came from Pusey & Jones to us. What was the date of that?

XQ157. October 27th, 1911. A. 1911. Well, that is about the time that Mr. Davis came to us from Pusey & Jones, and he came up there with some of Pusey & Jones' ideas, and he put them in there, something that I know nothing about. He is following out some of Pusey & Jones' ideas, so you better have him in here tomorrow, Mr. Paul, and then he can answer all those questions; but I can't answer that because I don't know anything about it; but I know he changed over a great many things on our machines, from Pusey & Jones' plans. He was with them for twenty years.

XQ158. This same contract, under the heading, "Fourdrinier part" on page 1, contains this item: "New end posts, new style, for supporting one end of shake and stationary rails, with shake roll section working on pin for raising and lowering breast roll end; use old cross brace." Do you know what— A. Well, that looks as if that calls for two posts; but I am confident that one of those posts, after they got to Lawrence, was all right, and we didn't make but one new one. The cable of the cross brace and the worm and gear, and the screw, was all right. The flood didn't hurt them a bit, you know; but it had broke one of the posts, and I think one of them was all right, and we used it, but we put in one new post.

XQ159. Does that item refer to the— A. That refers to that, there.

XQ160. Please look at that item again and see if it is that post that it refers to, at the breast roll end of the Fourdrinier plant? A. Yes, that is it. That is it, right there. It says here, make "new end posts," but I am positive that we only made one. I think that one of them was all right when we come to make it. In looking that stuff over up there at the mills, Mr. Davis drew this off, and some of it we could use, and Mr. Bayless wanted us to use all that we could, and so we did use all that we could.

XQ161. Was this the large machine or the small machine that was wrecked by the flood? A. The large machine, the 136-inch.

XQ162. This tracing that you produced represents accu-

rately the machines as they were installed, does it? A. Yes, sir.

XQ163. And they differ only in the exact width? A. Just in width. Otherwise they were exactly the same.

XQ164. Were there any other drawings of the machine made than this assembled drawing, showing details? A. Not for the Fourdrinier part. There were drawings made of the whole machine—tracings.

XQ165. Weren't the drawings made of the construction at the top of this supporting post? A. Nothing—I don't think there was, except the paper drawing there that he drew out for the pattern makers to make the pattern by.

XQ166. This drawing, "V-6," doesn't show the details of the top of that post, does it? A. Not exactly. Mr. Barrett spoke to you about that. He can answer that better than I can, Mr. Barrett, our foreman. You see, I am a salesman. I sell machinery, and I don't go into the details. I come home and then let the others work it out. That is where I—I was the salesman to sell the goods, bring it home and let them work it out.

XQ167. Do you know anything about the construction of that column, from your personal observation? A. No, sir.

XQ168. And you know nothing, from personal observation, about the extent of the adjustment that was provided in the machine? A. Yes, I know about that, because that was brought up, as I say, by Mr. Bayless. I was, I might say, the originator of that.

XQ169. Did you ever measure the possible adjustment of that machine? A. Why, sure, the screw tells you what you could do and what we have done.

XQ170. What was the length of the screw? A. Well, that I can't tell you exactly, but that screw must have been somewhere in the neighborhood of 18 inches long.

XQ171. What makes you say that? A. Because I have seen hundreds of them made there, and they laid around the shop.

XQ172. All since that time? A. Certainly.

XQ173. Did you ever measure the screw upon the original machine? A. No, sir; no, sir.

XQ174. Did you ever see that screw? A. Why, I saw it at the time, on the machine.

XQ175. Did you see it after it was in the machine, or— A. After it was in the machine.

XQ176. You never saw it before it was put in the machine? A. Well, I wouldn't say that. I may have seen it on the—

XQ177. Well, you have no means of telling us, then, what the length of that screw as used in that Bayless machine was? A. I couldn't swear to a quarter of an inch what was the length,

but my best recollection is it would be about 18 inches long.

XQ178. Now, just tell us on what you base that recollection. A. By seeing them made every day, you might say, there at the shop.

XQ179. You are talking now on the basis of other screws that you have seen made there? A. No, for that particular purpose; that screw is made for that particular purpose.

XQ180. You mean the screw threaded part of that— A. No, I mean the full, extreme length. Doesn't it measure about an inch and a quarter over all?

XQ181. No. A. I never measured it myself.

XQ182. It measures here, the full, extreme length of it, just a trifle over an inch? A. Well, then that would only be 12 inches. That is an inch to the foot, I think. But that drawing was made—it wouldn't be necessary that it would be exactly like that—that drawing was made before the machine was started, of course. In the first place, the machine was laid out on paper, and that was its starting, and if they found that screw was too short, they would make it longer. That was a drawing of the posts, as I understand it.

XQ183. Who made this drawing, this tracing? A. I think a man by the name of Bonney. I think Mr. Bonney made it.

XQ184. Where is Mr. Bonney? A. He is our draftsman now. We have had, of course, different draftsmen; but I am pretty confident that Mr. Bonney made that. Mr. Barrett could tell you when he comes in.

XQ185. Do I understand you to say that every machine that you have made since this Bayless machine, in 1901, has had an adjustment allowing it to be raised six inches above the level or dropped two inches below the level? A. Every one as much as that.

XQ186. Some more than that? A. Some more than that.

XQ187. How high? A. 15 inches.

XQ188. 15 inches above the level? A. Yes.

XQ189. When did you make the first one having the possible adjustment 15 inches above the level? A. Why, my best recollections, about three years ago.

XQ190. For whom was that made? A. Brompton Pulp & Paper Company, East Angus.

XQ191. Before that had you made one with a greater possible adjustment above the level than six inches? A. No, sir.

XQ192. Now, are you familiar with the practical operation of paper machines? A. Why, I have seen them running, that is all. I am no paper maker, and don't profess to be.

XQ193. In this machine at the Bayless place there is no

method of raising the suction boxes, was there? A. No, those were stationary.

XQ194. Now, how high can you raise the breast roll end of the wire and yet leave the suction boxes stationary, without having the wire leave the suction boxes? A. It wouldn't leave the suction boxes at all.

XQ195. Why is that? A. Why, for the simple reason that —well, that would depend upon the length of the wire.

XQ196. What was the length of these wires? A. I think they were 60 feet, to the best of my recollection.

XQ197. How high can you raise the breast roll end of the Fourdrinier wire and leave the suction boxes stationary and yet not have the wire leave the suction boxes, when you are using a 60-foot wire? A. I don't think it would leave it at all. You see, one-half of 60 is 30, and that would be about 12 feet, the difference—I don't think it would leave it at all; because the extent—if the machine was not running, of course, it would be a slight—it would be up there slightly; but the minute the machine was running, you put on your pump, and it pulls it right down. It wouldn't be up at all.

XQ198. My question was, how high you could raise the Fourdrinier end, the breast roll end of the Fourdrinier wire, when the wire is 60 feet long, leave your suction boxes stationary and yet have your machine above the level, your suction boxes level? A. I can't answer that question, sir. I never saw it done. I can't answer it.

XQ199. Was there any correspondence about the making of this contract for repairs, in 1911? A. All the letters are here. I couldn't tell you, sir. The letters will tell whether there was any—there must have been some letters about it. Surely there must have.

XQ200. Did you have anything to do with the actual construction of this machine, Mr. Horne? A. No, sir, not the actual work of it.

XQ201. You never saw the machine as actually constructed? A. Why, I go through the shop and see it as it is putting up, you know.

XQ202. But you never saw it assembled? A. Yes, I saw it assembled out to Austin, Pennsylvania. I went out there and saw it.

XQ203. When did you see it assembled in Austin, Pennsylvania? A. Just before it started, when my man was out there setting it up. We sent the machine out and then sent a man out to set it up, and I saw it before the machine was started.

XQ204. But after it was assembled? A. I won't say every

piece; practically every piece. But it hadn't started up.

XQ205. And did you notice whether the adjustment was in use at that time? A. No, it wasn't. It hadn't been worked; it hadn't been used, you know, hadn't started the machine up. I won't say that it was all set up, you know, but I like to go up and look a job over, before it is finished, and see that it is all right, and that the man is perfectly satisfied with it, before we—

Mr. Paul: Before you what?

The Witness: Well, before we settle up.

XQ206. Is this correspondence you have produced all the correspondence? A. I think everything is here.

XQ207. Did you have any personal knowledge about the repair parts that were made in 1911? A. No, sir, I did not, with the exception of—I didn't go into that. Mr. Davis knows all about that. He took the order and looked after it, and I didn't bother about it.

XQ208. In whose handwriting is that interlineation, "New up and down motion," in the contract of January 18, 1901? A. My brother John's, John E.'s.

XQ209. When did he put that in? A. I couldn't tell you. At the time that there was a contract, I suppose.

XQ210. What did he have to do with the drawing up of that contract? A. Well, he and I were in company together, you might say, and while my business always has been to sell the goods, he looks after the office part. The second contract, Mr. Davis drawed up, and it is done more in a systematic manner.

XQ211. You said, I notice, that Mr. Bayless wanted to make what you call bogus manila paper out of a spruce stock? A. Yes.

XQ212. All wood paper? A. Yes.

XQ213. Was that any reason for his wanting this adjustment for the breast roll end? A. I think it is. I think it is. You take paper out of rags, and it is always running level, and the water works different, you will notice, than where it is with wood.

XQ214. In what way different? A. Well, you might say it was freer stock. The water runs out of it quicker. Rags hold it more like a sponge—rag stock.

XQ215. And that was the reason he wanted to run it down below level, so that he would get down to the suction boxes? A. I don't think he wanted to run it below level on bogus manila or wood stock. That would do all right on slow stock, where it is on rags, but on anything where it is free, you want to raise it up so as to let the water run. That is the idea. That is the idea of making print paper running fast, the faster you make

it the more pitch you have got to give it to get that water down to the width you wish it. You see it was unheard of in those days, running a machine at any such speed as they run them now.

XQ216. What was the speed at which these machines were intended to be run? A. That machine, I think was from 60 to 600. I think so. I don't mean 600—360; 6 to 1; 60 to 360. Now we are running print machines—we have made them to run 700 feet a minute.

XQ217. When did the high speed begin to come in? A. Well, I should say—I don't know exactly, but the high speeds began within ten years, I should think. I can't give you the exact date.

XQ218. What do you mean by high speeds? A. Well, they kept gradually going up and up and up, and when we got on 500, we thought it was a big speed. And now they have gone up to seven, and even Garrett Schenk, of the Great Northern Paper Company, is trying to get 1,000 feet a minute out of a machine, and had one built; but whether he ran it successfully or not, I couldn't say.

XQ219. How long ago did you consider 500 a high speed—500 feet a minute? A. Why, I think five years ago. Five years ago I don't think there was a machine in the country ran over 500 feet a minute. I don't think so.

XQ220. What did Mr. Bayless want this machine constructed with a possibility of running the wire up hill, for? A. I couldn't say, sir, unless—I couldn't say. I couldn't answer that question.

XQ221. Presumably because he might want to run with a slow stock? A. Possibly.

XQ222. And that when he had a free stock he would run with the wire above level? A. Sure.

XQ223. You spoke about having made one of these machines, made some of your machines with adjustment as high as 15 inches above level? A. 15 inches, I have, yes.

XQ224. What did you do about the suction boxes in those machines? A. I think Mr. Barrett raised—put a piece under this post, or lengthened it out.

XQ225. That is the post at the— A. Where it joins, there is a post where it joins the permanent rail and the shake rail. There is this post here. So that he gave the suction boxes a permanent inclination. In other words, the suction boxes would have been a little mite on the slant. A fast running machine, running say six to seven hundred feet a minute, it is never lowered; it is really never lowered, because they are going

to run it at that speed. They are trying to get the production out of it, and they keep it up there.

XQ226. As I understand your testimony, this machine was built so that the breast roll could be raised to a maximum height of six inches above the level, and could be lowered to a minimum of two inches below the level? A. Yes, or in other words, we made that screw so that we gave Mr. Bayless what he wanted. If he said eight inches above and four inches below, all we could do was to make a longer screw; but we gave him what he was after. That is what we always try to do, give a man what he is after.

XQ227. What you gave him was a screw that allowed— A. I gave six above and two below. I am very positive that is what he asked for, and that is what we gave him.

XQ228 Take the year 1905 and 1906, which is about 10 or 11 years ago, what was the usual speed for paper-making machines, in those days? A. Well, that is according to the paper that they make on it.

XQ229. News paper? A. Oh, news paper. I am pretty positive that they hadn't got up to more than 350 or 400 feet.

XQ230. When did you first hear of a high pitch put upon paper-making wires? A. I couldn't say just now just when it was.

XQ231. You approximate it? A. No, but Mr. Davis could tell you better about that. We haven't made—our business never runs into news machines. Our business has been principally book machines. We have made more book machines than any other machines, and we don't go into these high speed machines, news machines.

XQ232. How would Mr. Davis know about it? A. Simply because he worked for Pusey & Jones for twenty years, and they made the first fast running machines that ever was built, I think. They were more news machine builders.

XQ233. What was the date when this contract was entered into, Mr. Horne? A. I think it was finally signed somewhere in January, 1901. I don't know as it was signed at all, as far as that is concerned; but I mean the order—something—the order given—I think it was somewhere about January, 1901. The letter will show.

XQ234. You look in the letter and see. You made your proposition January 19, for a price, but I don't think it was accepted until a little bit later than that. A. As I say, it must be later than that. I don't know the exact time.

XQ235. I don't see it in the correspondence. A. It should be, when he accepted it.

XQ236. I don't find any reference in your correspondence to him of— A. It should be in there. We mailed a letter to them setting this price. Now he has accepted it somewheres. I haven't looked over these letters personally, so I don't know.

XQ237. Here is a letter February 19, 1901, from the Bayless people to you. A. Yes.

XQ238. Which says that they are sending you the specifications for machine, with all the changes agreed on when you were there, and that on return of the contracts they will sign them and return them to you with check as stated; and another letter of February 25, from them—of February 28, 1901, which says that they returned therewith, one of the contracts properly signed, enclosing check for $5,000. Does that fix the date when the contract was signed? A. Sure it does; if it says so there.

XQ239. Well, it does say so, doesn't it? A. Well, that is the letter. That is exactly what it says. Then the contract was signed on or before February 28, 1901.

XQ240. Where is the signed copy of the contract? A. I couldn't say, sir. I supposed you had it here, but that is not a signed contract. Haven't you got Bayless' signed contract?

Mr. Paul: No.

XQ241. What is the height of the slices, as provided for in that contract, in those Bayless machines? A. I am pretty positive they were eight inches. I might be mistaken. They may not be over six, but they are surely six. Two sets of slice bars eight inches deep, with rib on top.

XQ242. Now, what means was provided for raising the apron board when the breast roll was to be elevated, in this Bayless machine? A. My impression was that—I don't know. I won't say.

XQ243. Some means would have to be provided, wouldn't there? A. I couldn't say to that.

XQ244. Some means would have to be provided? A. Mr. Barrett understands that construction. He is more of a mechanic than I am. He can tell you. I left that all to him.

XQ245. Some means would have to be provided, wouldn't it? A. Yes, some means would have to be provided, of course.

XQ246. And are there any means shown on this drawing? A. I don't think so, no, sir. I don't think so, not on the drawing.

Cross examination closed.

RE-DIRECT EXAMINATION.

By Mr. Paul:

RDQ247. I want to ask you one question. Referring to that repair contract, I call your attention to the fact that two sets of posts are referred to. One says, "New end posts, new style, for supporting one end of shake and stationary rails," and so forth. Now, down below it says, "New Fourdrinier supporting posts at breast roll end, with horizontal compensating springs." A. I don't know anything about that.

RDQ248. No, but which set of posts or which post is referred to by the first specification, and which by the second? What does that refer to? A. I should naturally suppose that that one referred to this.

RDQ249. You would think the first one referred to the— A. This is the shaker at the raising and lowering, the breast roll end. Here is the breast roll.

RDQ250. Where do you read raising and lowering the breast roll? A. Raising and lowering the breast roll, right there, so that that would be those posts, but I don't think there was only one made. I think, to the best of my recollection, they came back, and one of them was good enough, and we used it. That is just what I think.

RDQ251. Doesn't that refer to the end of the shake rail, the lower end of the shake rail; that is on a pin, raising the lower one, the one that refers to the posts of the breast roll? A. Possibly it may be. Possibly it may be.

Mr. Paul: All right.

A. (Continued). But this spring business, I don't know anything about.

Examination closed.

CHARLES E. BARRETT,

a witness called on behalf of the defendant, being first duly sworn, deposes and says, in answer to questions by Mr. Paul, as follows:

Q1. What is your full name? A. Charles E. Barrett.

Q2. Where do you live, Mr. Barrett? A. In Lawrence, Mass.

Q3. How long have you lived at Lawrence? A. Twenty-seven years.

Q4. With what company are you employed? A. J. H. Horne & Sons Company.

Q5. How long have you been employed by J. H. Horne & Sons Company? A. Twenty-seven years.

Q6. What was your position when you first went there? A. Draftsman.

Q7. How long did you work as draftsman? A. One year.

Q8. Then what did you do? A. Went to the shop, foreman in the shop.

Q9. What position in the shop? A. As foreman, at that time.

Q10. How long did you hold the position of foreman? A. Oh, fifteen years.

Q11. Then what position did you have? A. Superintendent.

Q12. And you are still superintendent? A. Yes, sir.

Q13. Then you have had the three positions of draftsman, foreman and superintendent? A. Yes, sir.

Q14. In the twenty-seven years? A. Yes, sir.

Q15. And you have been superintendent for about ten years? A. Yes.

Q16. Did you know of the building of the two Fourdrinier paper machines for the Bayless Company that were erected at Austin, Pennsylvania? A. Yes, sir.

Q17. Do you recall when those machines were put through the shop? A. Yes, sir.

Q18. When was it? A. In—I have forgotten just the date.

Q19. Well, about how long ago? A. It was in 1892, the machine was—

Q20. You mean 1892 or 1902? A. 1902; 1902, I mean.

Q21. When was your attention first called to this matter of building machines for the Bayless Company? A. These were the first machines that were built for them.

Q22. And how long ago before the machines were started were you told about this? A. When the contract was made, when the machines were contracted for.

Q23. Who told you about—that those machines were to be built; how did the matter come to your attention? A. Mr. Horne and myself went there to see Mr. Bayless.

Q24. Where did you go? A. To Binghamton, New York.

Q25. Whom did you see at Binghamton? A. Mr. Bayless.

Q26. Was there any discussion there as to the kind of machine? A. Yes, sir.

Q27. Do you recall what Mr. Bayless' requirements were with respect to this machine? A. He wanted, as I understand it, he wanted the Fourdrinier part built so that he could raise it six inches above the level and two below the level.

Q28. Raise it six inches above and lower it two inches below? A. Yes.

Q29. Did you hear Mr. Bayless say that? A. Yes, sir.

Q30. Did he say why he wanted the machine capable of being raised six inches above the level? A. Why, as I understand it, he wanted it so that he could run the machine faster, as I understood him to say.

Q31. Did he say for what kind of paper he wanted it to run faster? A. No, he didn't say.

Q32. What, if anything, did you do in reference to a machine meeting those requirements of Bayless? A. Why, we made the breast roll end so that he could raise it or lower it by means of the worm and gear, and do it while the machine was running.

Q33. And did you build the machines that way? A. Yes, sir.

Q34. How many machines did you build for Bayless? A. Two.

Q35. How much could those breast rolls in those machines be raised above the level? A. Six inches.

Q36. And how much could they be lowered below the level? A. Two inches.

Q37. Did you have anything to do with getting up that device? A. Yes, sir.

Q38. Anybody with you? A. Yes, sir.

Q39. Who? A. Mr. J. E. Horne.

Q40. Mr. J. E. Horne? What was Mr. J. E. Horne's position in the company? A. He is treasurer.

Q41. And what part of the business—what has he had to do with the getting up of machines; did he work with you on those machines? A. He worked with me on it, helped to design it.

Q42. Were drawings made, showing that device? A. Yes, sir.

Q43. And have you seen any of those drawings here today? A. Yes, sir.

Q44. What is this drawing to which I call your attention, this tracing that is marked "Defendant's Exhibit V-5"? A. That is the original drawing.

Q45. That is the original tracing of that machine? A. Yes, sir.

Q46. Were these machines alike? A. Both machines were alike; that is, not the same width. They were different widths.

Q47. What were the widths? Do you recall how much difference there was in the width? A. I couldn't say just now.

Q48. They were alike, except for the width? A. Yes, sir

Q49. One was wider than the other? A. Yes, sir.

Q50. Now, does this drawing which you have before you,

tracing, "Exhibit V-5," does that show the arrangement of the Fourdrinier end, the adjusting device that you refer to? A. Yes, sir.

Q51. Do you recall whether there was any paper drawing from which tracing was made? A. Yes, sir.

Q52. Do you know what become of that original—the tracing,—paper drawing? A. It is here.

Q53. No, I mean the drawing from which that was traced, the drawing that was like that? A. Oh, the drawing from which this was traced? Well that— (Witness refers to the manila drawing, "V-6.")

Q54. Now, the question is, where is the original drawing for which this tracing was made? A. It must be—it is so long ago it might have been destroyed, but—

Q55. You may have it? A. We may have it. I couldn't tell.

Q56. Now, where would it be, if you have it? A. In the office there.

Q57. Where would it be kept? A. Upstairs in the loft.

Q58. Now, if that drawing is there, can you find it? A. Yes, sir.

Q59. And will you do that when you go back tonight? A. Yes, sir.

Q60. Now, what is this drawing that you refer to, this on the manila paper, marked "V-6"? A. That is the drawing that the shaker post is made from.

Q61. Those are the posts at the breast-roll end of the machine? A. Yes.

Q62. What is shown on this drawing; will you please state? A. That shows the opening of the—how much the hook that the cable is attached to can raise up before it gets to the end of this slot, to the end of the opening.

Q63. This drawing then is a drawing of a portion of the posts at the Fourdrinier end, in which this cable is located? A. Yes.

Q64. And what is represented by this block that is marked 18 inches? A. That is the extent, how high the hook can go up before it strikes the top.

Q65. That is, where the slot through which the hook projects is connected with the roll? A. Yes.

Q66. The upper part of the drawing, as I understand you, shows the elevation of the post? A. Yes.

Q67. One of them, the one on the right, showing the front view of the slot; is that right? A. That is right.

Q68. And the two views at the lower part, the one at the

left shows what? A. That is the edge view.

Q69. That is the edge view of the post? A. The edge view of the post.

Q70. And the slot is represented by the cross dotted lines? A. Cross dotted lines, yes.

Q71. Now, what is shown at the— A. This is the lower.

Q72. Left hand, lower corner? A. That is the lower section, showing the bottom of the post.

Q73. That shows the lower part of the post? A. Yes, sir.

Q74. Is there any line on which that section is taken, any line shown on the elevation above? Is that on Section AB, line AB? A. That is on section—this shows the—that shows the opening at the bottom, and then that shows the width of the slot.

Q75. Now, is that section taken on the line AB, right at the top of the base? A. Yes, that is the section, yes, sir.

Q76. Is it on that line, or is it above that line? A. Right on that line.

Q77. Then the section in the lower left-hand corner of this drawing is taken just above the base of the drawing, at the left of the upper part of the sheet; is that right? A. Yes, sir.

Q78. Now, tell us about this drawing at the lower right-hand corner; what does that represent? A. That represents the top of the post.

Q79. And what is the little part in the section at the left? A. That shows the top of the post, the flange we call it, a flange on top of the post which they put the cap on.

Q80. That is a detail of the flange at the top of the post? A. At the top of the post.

Q81. On which you place the cap? A. The cap.

Q82. To which the gear is secured? A. To which the ring gear is fastened.

Q83. That supports the ring gear or supports the gear? A. Yes.

Q84. Now, on the back side of this manila drawing there are some lines. What do those have to do with this drawing, if anything? A. They have nothing to do with the post whatever. That is a separate—it is merely a gear.

Q85. Hasn't anything to do with this machine? A. Nothing whatever to do with the machine, no.

Q86. Just happened to be on the back side of this sheet? A. Happened to be on there when this drawing was made.

Q87. And did you have anything to do with the making of this contract? A. No, sir.

Q88. Where were these two machines built, in the Lawrence

factory? A. In the Lawrence factory.

Q89. Were they set up there in the factory? A. Yes.

Q90. Tried out? A. Yes, sir.

Q91. Of course they weren't used in making paper there? A. Oh, no.

Q92. Run idle, run empty? A. We didn't run them, no.

Q93. Didn't run them at all? A. No.

Q94. Just set them up there? A. Yes.

Q95. Assembled them? A. Yes.

Q96. Then you took them apart and shipped them out to Austin? A. Yes.

Q97. Who went out there to set them up, do you remember? A. Mr. Lomax.

Q98. Is he working for you now? A. Yes, sir. He is in Kalamazoo now, setting up a machine.

Q99. Did you ever see these machines after they were shipped from the factory? A. No, sir.

Q100. Do you recall when any repairs were made on one of those machines later? A. Yes, after the flood.

Q101. After the flood what parts were furnished new, do you recall? A. Well, there are some of the posts on the Fourdrinier part, and some of the brass posts, and one shaker post, and some other small details that went with it.

Q102. But those were the principal parts? A. Those were the principal parts.

Q103. Did you superintend the making of those parts? A. Yes, sir.

Q104. Was there any change in the posts that come between the joint of the shake rail and the permanent rail, from the construction shown on this drawing? A. They were made just the same as they were in the first place.

Q105. The same as they were in the old machine? A. Yes, sir, from the original pattern.

Q106. Were they any higher? A. No.

Q107. What about the posts at the breast-roll end? A. That was made from the original pattern.

Q108. That was made from the original pattern? A. Yes.

Q109. This contract for the repairs speaks of this post near the suction boxes as a new style. What does that mean? Did you make a new style post there, at any time? A. Oh, yes, I remember now, this rail—

Q110. You mean, you refer to the shake rail? A. The shake rail rests on a movable block.

Q111. And what about the permanent rail? A. The permanent rail is the same.

Q112. Now is that still horizontal, or was that inclined? A. The same.

Q113. Now, then, there was a change in that post, you remember now? A. Yes.

Q114. You remember now there was a change? A. Yes.

Q115. And that was the change that you speak of? A. Yes.

Q116. The end of the shake rail that comes on this post, was on a sort of a hinge? A. On a sort of a swivel block.

Q117. What was the purpose of that? A. The purpose of that was so that where the shake rail fastens on to the permanent post, the shake rail had to move on a bolt, and in consequence, the rail didn't rest even on the top of the post at all times.

Q118. That is, on the old construction? A. On the old construction.

Q119. On this new construction? A. On the new one, the shake rail rests on this block, and it swivels on the block, and also swivels up and down on the block.

Q120. That left it with the permanent bearings? A. Left it with the permanent bearings.

Q121. Now, in these machines that were constructed for the Bayless Company, as I understand it, you could raise the breast-roll end, and that would give the wire a pitch from that point down to the suction boxes? A. Yes, sir.

Q122. And then it would be flat from the suction boxes to the guide roll; is that right? A. Yes, sir.

Q123. Now, was there any means on those machines, of tilting the suction boxes, or did those remain flat? A. Well, no, there wasn't no means built for it.

Q124. Those were attached to the permanent rails? A. Attached to the permanent rails, yes, sir.

Q125. Well, were they constructed so they could be tilted, if anybody wanted to do it? A. Oh, yes, they could put a wedge in there, because the screws that hold the suction boxes up to the permanent rail can be adjusted, so that you could tilt the box in different positions.

Q126. You don't know whether that was ever done? A. I don't.

Q127. When the machines were in operation? A. I do not.

Q128. Did you ever see it done on any machines? A. No.

Q129. Never saw that done, and you don't know that it was done on these machines A. No, sir.

Q130. Now, supposing that those suction boxes remained level and you adjusted the breast roll vertically, the full amount of 6 inches, would that lift the wire off from the first suction

boxes? A. Not if the wire is— When the suction is on the boxes, it will hold the wire down.

Q131. The suction will hold the wire down? A. The suction will hold the wire down.

Q132. Suppose you stop the machine and let the suction off, would the wire then rise up? A. It would rise off from it, that is, a certain portion of it.

Q133. And then suppose you wanted to start up the machine, what could you do? A. Then they would put the suction on to the suction boxes, pull the wire down, and then start up.

Q134. Put the suction on before you started the machine? A. Yes.

Q135. How would you do that? A. By the suction pump; that runs independent of the machine.

Q136. The suction pump can be run before the machine is started? A. Yes, sir.

Q137. Now, did you ever see that done? A. I never saw it done, but I know it—I have seen so much suction put on to the wire it will start the wire.

Q138. You think it could be pulled down in that way? A. Yes.

Q139. Do you think that when the machine was in operation, with the 6-inch elevation of the breast-roll, the wire would be hugged to the suction boxes, by the suction? A. Yes, sir.

Q140. But you haven't had any personal experience with that? A. No, sir.

Q141. Are you a paper maker? A. No paper maker, no, sir.

Q142. Was a patent taken out on this construction shown in this drawing of the Bayless machine? A. Yes, sir.

Q143. By whom was that patent taken out? A. Do you mean the company that got the patent?

Q144. I mean who applied for the patent; were you one of the applicants? A. Yes, sir.

Q145. And who else? A. And J. E. Horne.

Q146. J. E. Horne? A. Yes.

Q147. Now, was there a patent before that, in which you were one of the applicants? A. Yes, sir.

Q148. On an adjustment device? A. Yes, sir.

Q149. The patent that I showed you, and that you said was taken out by yourself and J. E. Horne, on this Bayless device, is numbered 691,333? A. Yes, sir.

(Paper marked for identification, "Defendant's Exhibit V-8.")

Q150. Now, I call your attention to the patent 634,228. Were you one of the patentees of that machine? A. Yes, sir.

Q151. Who was the other patentee? A. J. H. Horne.

Q152. That is the father of J. E. Horne and Byron F. Horne? A. Yes, sir.

Q153. He is not living at this time? A. No, sir.

Q154. Did you ever build a machine with the adjusting device shown in this patent, No. 634,288? A. No, sir.

Q155. None of those was ever built? A. No, sir.

Q156. Was this machine built for the Bayless Company, shown in the drawing Exhibit V-5, provided with any means for adjusting the apron leading from the flow box to the wire? A. The apron board was made so they could raise it or lower it.

Q157. How much could it be raised? A. They could raise it, —if I remember right, they could raise it 6 inches.

Q158. How was it held? A. On a hinge.

Q159. Well, then, if it was— A. Tilt up.

Q160. It would tilt up? A. Yes.

Q161. It wouldn't lie horizontal then, when it was pulled up? A. No.

Q162. Was there any means for adjusting the board bodily upward, do you recall? A. Not this part. They done that with what they call an apron.

Q163. The apron? A. The apron. The flow of the stock on to the breast-roll was protected by what they call an apron.

(Direct examination closed.)

CROSS EXAMINATION.

By Mr. Lyman:

XQ164. Were the machines for the Bayless Company built literally in accordance with this sketch? A. Yes, sir.

XQ165. This drawing? A. Yes, sir.

XQ166. "V-5," this one here? A. Yes.

XQ167. What did you have to do with the building of those machines personally? A. Personally, being foreman of the shop, I had the looking after the building of the whole thing.

XQ168. Were there any other working drawings of the machine made, other than that tracing and this manila sheet drawing, except "V-6"? A. No, sir.

XQ169. Just those two drawings? A. Just those two drawings; that is for this part, you know.

XQ170. For the Fourdrinier part? A. For the Fourdrinier part; we had the drawings for the other part.

XQ171. What was the length of that cable by which the Fourdrinier part was suspended, in that machine? A. Four feet.

XQ172. Four feet? A. I think so.

XQ173. Does figure 4 of this patent 691,333, show the con-

struction at the top of the post as it was built on those Bayless machines? A. Yes, sir.

XQ174. And shows the screw as it was built on the Bayless machine, too? A. Yes.

XQ175. What was the length of the screw that was put in on these Bayless machines? A. 11 inches long the screw part.

XQ176. Is that from the top of the screw down to the bottom of the yoke, or to the top of the yoke? A. From the top of the screw to the top of the yoke.

XQ177. Have you any memoranda of that, or do you carry it in your memory, that length? (Witness produces blue print.) What is this blue print that you produce? A. That is one that they used on the Bayless machine.

XQ178. Where did it come from? A. It come from the office.

XQ179. You brought it down with you? A. Yes, sir.

XQ180. And this is an accurate representation of the screw that was used on those Bayless machines? A. Yes, sir, only the thread comes clear way down to the top of the yoke on the Bayless machine.

XQ181. How did it happen to be shown differently in this drawing? A. The draughtsman didn't show it clear down, but it was always made that way, clear down to the top of the yoke; always threaded clear down to the top of the yoke.

XQ182. Have you any other detailed drawings like this, of the parts, of the top of the posts and the gears or the cap? A. I couldn't say that we have now. We may have.

XQ183. Did the draughtsman make this from an actual drawing? A. Yes, sir.

XQ184. From an actual screw? A. Yes, sir.

XQ185. Why didn't he carry the thread down all the way? A. It wasn't thought necessary at that time.

XQ186. Who was the draughtsman? A. Mr. Bonney.

XQ187. Did he make this drawing from the actual screw used on the Bayless machine? A. He made the drawing; but the screw was made in the shop, and it was threaded down, clear way down. It wasn't followed directly from that blue print.

XQ188. What screw did he have before him in making this drawing? A. He didn't have any.

XQ189. How did he happen to make this drawing, do you know? A. Well, he made it—I don't know what you mean, how he happened to make it, but—unless he made it from the—

XQ190. He made it from the Bayless screw? A. For use in the Bayless machine.

XQ191. For use in building the Bayless machine? A. For

use in building the Bayless machine, yes, sir.

XQ192. Have you any other means of stating what the length of the screw that was used on the Bayless machine was, than this drawing? A. No, sir, excepting by the blue print.

XQ193. Only by the blue print which you produced? A. I ask that this blue print produced by the witness be marked for identification.

(Blue print produced by witness marked "Defendant's Exhibit V-10.")

XQ194. After the No. 1 machine had been wrecked by the flood, there were certain repair parts made? A. Yes, sir.

XQ195. Were they made under your supervision? A. Yes, sir.

XQ196. Do you know whether the gear that had been used originally on this supporting post, was used after the wreck? A. Yes, sir

XQ197. Was the same cable used? A. The same cable used.

XQ198. Was the same screw used? A. The same screw.

XQ199. Was the construction of the post changed? A. No, sir.

XQ200. Was the construction of the back part of the post changed? A. No, sir.

XQ201. Is it your recollection that both or only one of the supporting posts at the breast-roll end of the Fourdrinier were replaced after the flood? A. My recollection is there was only one.

XQ202. How do you happen to remember that the length of that cable was four feet? A. Because we have that drawing, that cable, as it was made in the first place.

XQ203. Where is that drawing? A. In the office.

XQ204. I would like to see that drawing. Can you produce it? A. Yes, sir.

XQ205. And have it here? A. Yes, sir.

XQ206. Can I see it? A. It isn't here. I can send it to you.

XQ207. Will you also see if you have any drawing showing the gear itself and the construction of the cap at the top of that post? A. We can make one if we haven't got it.

XQ208. No, I want the original.

XQ209. (By Mr. Paul): If you have any original drawing, Mr. Barrett— A. Original drawing, yes.

XQ210. And any of these parts that were on that Bayless machine, that is what we are after. A. Yes.

XQ211. I understood that we had everything. If there is anything more— A. If there is anything more, Mr. Paul, I

will bring it.

XQ212. And you say there is a drawing of the cable? A. Yes, sir.

XQ213. You are not sure whether there is any drawing of the cap? A. I am not sure of that.

XQ214. Or the gears? A. I am not sure of that.

XQ215. If there are any you will produce them? A. Yes, sir.

XQ216. (By Mr. Lyman): Did you ever see a Fourdrinier machine operating, in which the wire was elevated at the breast roll end, but the suction boxes remained level? A. No, sir, I never saw it when it was running, no, sir.

XQ217. So that when you talk about the possibility of running such a machine with the wire elevated six inches above the level, and yet the suction boxes stationary, you are speculating, really; you are not testifying from what you have actually done, but from theory? A. I never have seen it run.

XQ218. Was there any means provided for adjusting the height of that flow box or the height of the walls of the flow box, in the Bayless machine? A. The breast-roll board was made on a hinge, so they could raise it or lower it as they raised the breast-roll.

XQ219. But that left the flow box stationary? A. The flow box stationary.

XQ220. And made the water run up hill? A. Yes, sir.

XQ221. When it came out of the machine? A. Yes, sir.

XQ222. That is, in case they ever had to elevate the wire, what was the reason for providing in that adjustment of the breast roll end, means for lowering the breast roll two inches below the level? A. That, as I understand it, the paper makers, when they are making different grades of paper, when they run a certain kind of paper, they want to have the breast roll below the level; when they are making other kinds of paper they want the breast roll above.

XQ223. In connection with making what kind of paper do they want the breast roll below the level? A. Very heavy paper, as I understand. I am not a paper maker.

XQ224. In making what kind of paper do they want the breast roll above the level? A. Very light paper.

XQ225. What is the reason for that? A. They run the machine so much faster.

XQ226. With which kind of paper? A. With the thin kind of paper they run the machine much faster.

XQ227. With the thin kind of paper? A. Yes.

XQ228. And what has that to do with it? A. They make

more production.

XQ229. Yes, but what has that to do with the question of whether the breast roll shall be above the level or below the level? A. When it is above the level it carries the water down to the suction boxes at greater speed.

XQ230. You mean it gives less time for the stock to drain? A. Yes, sir.

XQ231. And the purpose is to get the stock to the suction boxes with more moisture in it than it would have? A. That is right. That is what I understand.

XQ232. If it were level? A. Yes, sir.

XQ233. On the other hand, if you put the breast roll below the level and run the wire below, the stock longer on the wire, therefore it would get down into the suction boxes drier than if you ran on a level? A. Yes.

XQ234. So that with free stock or light paper you would put your adjustment such as the breast roll above the level, or with close stock or heavy paper you would put the breast roll below that? A. Yes, sir.

XQ235. That was the reason for this adjustment in the Bayless machine? A. That is the way I understand it.

XQ236. How do you figure that with a screw 11 inches long there was a possible adjustment of six inches above the level or two inches below the level? A. There would be eight inches movement and the hub of the gear, the worm gear, is less than three inches. Therefore it will give eight inches of adjustment.

XQ237. How do you know that the hub of the worm gear is less than three inches? A. They are not quite three inches long, if I remember right.

XQ238. What is that? A. They are not quite three inches long, the hub of the gear.

XQ239. You mean thick? A. Yes, sir.

XQ240. Well, have you any means, except your recollection, for saying that? A. Well, we used the regular gear that we use on engines, that we gear.

XQ241. How thick was the cap on top of the post? A. It is three-quarters of an inch.

XQ242. How do you know that the machines were set up in such a way that of that eight inches of movement six inches was above the level and two inches below the level? A. We had them set up in the shop, and they were tried out there in the shop, at the time they were built.

XQ243. Were these patent drawings made from the actual construction of the Bayless machine? I refer to the patent 691,333, this one we have been looking at? A. Yes.

XQ244. Since making the Bayless machines, you have made others with greater adjustments? A. Yes, sir.

XQ245. Have you? What is the highest adjustment that you have made? A. Fifteen inches.

XQ246. And when was that made first? A. That was made three years ago.

XQ247. And previous to that had you made any with an adjustment greater than six inches? A. No, sir.

XQ248. Had you made a considerable number of machines with six-inch adjustment? A. Yes, sir.

XQ249. Have you made others with an adjustment equal to 15 inches, within the last three years? A. No, sir.

XQ250. Just that one machine? A. That one machine, yes, sir.

XQ251. And in that machine what did you do in relation to the suction boxes? A. The permanent posts were raised higher.

XQ252. How were they raised? A. By being made longer, with a new pattern.

XQ253. In any of these other machines that you have put in, with the six-inch adjustment, have the suction boxes been given any permanent alteration? A. They have been made longer, yes, sir.

XQ254. I notice in an affidavit that you filed in this case, I mean that you made, which was filed in this case in connection with the motion for a preliminary injunction, that you said: "That the Bayless machine differs from the showing of the patent in that the rod thereof corresponding to the rod 41 of this second patent was threaded down to its forked portion" and that "this increased threaded portion of the rod was at least one and one-half inches and thus would result in an elevation at least of four and one-half inches and probably more." How does it happen that you now say that that elevation was six inches, whereas then you said it was four and a half inches? A. We found that we could raise it six inches.

XQ255. How had you found it? A. By demonstrating there in the shop.

XQ256. On what machine? A. Why, by the length of the screw and the worm gear and the cap, we have demonstrated that we can raise it six inches, and two below.

XQ257. What worm gear and what screw and what cap? A. The same as we used on the Bayless.

XQ258. How do you know whether they are the same as those you used on the Bayless, or not? A. They are made from regular stock.

XQ259. How long was the screw on which you demonstrated

that? A. 11 inches.

XQ260. How do you know that the screw on the Bayless machine was threaded down through a slot, clear down through a slot? A. At that time it was tried out, so that it would raise up as high as it could go.

XQ261. At what time did you ever try that? A. Oh, at the time the machine was built.

XQ262. Six inches is the maximum possible adjustment above the level in that Bayless machine, is it? A. Yes.

XQ263. Please tell us how much above the position of the hook to which the supporting cable was attached, as it is shown in this tracing, the slot is supposed to extend (referring to "Exhibit V-5")? A. You mean from the bottom?

XQ264. Yes. A. I couldn't say positive just how much that is, but I think it is not over 10 inches, because the hook is made shorter than what it is shown on that tracing.

XQ265. Please scale it on this drawing, Mr. Barrett, and tell us how far above the position in which the hook is shown on this drawing, it could be raised, with the slot 18 inches long, as is shown on the cable drawing here, "Exhibit V-6"? A. As I say, this hook wasn't made as long as what it is shown on here. If the slot in the post is long enough so that that will go up six inches—

XQ266. Please answer my question. I am talking about this drawing here. Just scale it on the drawing. A. That shows 14 inches.

XQ267. My question is, how high, how much higher than the position in which it is now shown, could that hook have been raised, with the slot 18 inches long? A. The back of the hook is so much shorter than the front, it will allow it to go up six inches, with 18-inch opening.

XQ268. Isn't it a fact that measuring on this tracing, "Exhibit V-5," the hook by which the frame is supported on the cable, would strike against the top of the slot, if the slot was 18 inches long, when the hook was raised something less than four inches above its present position? A. I am asking now about this drawing? A. I make it 5 inches on that.

XQ269. I will have to get you to measure that again, Mr. Barrett. You measure it accurately, yourself. First measure the point where that 18 inches comes, and then measure the rest, and you will find it is less than 4 inches. Now I want you to measure that again. A. (Witness measures). I call it close to 5 inches.

XQ270. Well, less than five inches or more? A. I call it close to five inches.

XQ271. I will have to get you to go through with your reasoning in detail. Please mark with A the line from which you—the base line from which you start. A. (Witness marks).

XQ272. Now mark with a B the top of the slot. (Witness marks). Now you have marked A and B; the distance between those two lines, between those two points, is 18 inches, on the scale on which this blue print is made, is it? A. Yes.

XQ273. And, by the way, there is no difference between the length of lines and parts on these blue prints, from what there is on the original tracing, is there? If there is, I want to see the original tracing? A. No, sir, it is the same as the original tracing.

XQ274. Now indicate by a letter C the inside of the wall of the post, at the point where the hook will strike it in its upward movement. (Witness writes). No, that isn't right. Your 18 is right at this end here, is it, now; right there, is it? A. Yes.

XQ275. Now, I ask you to indicate the inner wall of this post against which that hook is going to hit first, when it rises up there. It is this wall here, as I understand it; is that right? A. Yes.

XQ276. I am going to call that C. Now this next question, please indicate by the letter B the point on the hook which will first come into contact with the top of the slot, when the hook is raised from its present position. Now I say it is that point there; is that right? A. It looks all right to me.

XQ277. I am going to mark that with a D. Now tell me, please, the distance between the point D and the point B, the vertical distance between the points D and B? A. Four and one-half inches.

XQ278. You measure that again. Mr. Aldrich tells me that each one of those sections is one inch. What do you take it to be? A. It seems to me four and one-half inches.

XQ279. Will you measure that again, that distance, and tell me what you find? A. Four inches.

XQ280. My measurement of that distance is less than four inches.

Mr. Paul: The statement is objected to. Mr. Lyman is not a witness.

XQ281. Was there any blue print of this hook ever made, in which the supporting cable engages? A. Yes, sir.

XQ282. Can you produce that blue print? A. Yes, sir.

XQ283. Have you it here? A. Not here. It is in the office in Lawrence.

XQ284. How did it happen that the thread on that screw

was extended down to the base of the yoke, when the drawing showing that screw showed it had not extended to the base of the yoke? A. The workman that made the screw didn't make it like the drawing.

XQ285. How do you know that? A. As I know it was threaded down to the yoke.

XQ286. How do you know it was threaded down to the yoke? A. That is the way we have always made them, that way. All the screws have been made clear down to the yoke.

XQ287. Since then? A. Then.

XQ288. How do you know that screw was the first one that you made for the Bayless Company? A. Well, we don't know that that one was. We have always made them that way. We didn't follow the blue print to make the screw by, at that time.

XQ289. Is your answer now that you do not know that the screw on the first Bayless machines have the threads going down to the base of the yoke? A. I couldn't say for sure that it went clear down.

XQ290. Well, can you say for sure that it was possible to raise that in that machine up to 6 inches above the level? A. No.

XQ291. I am asking you now about those particular machines that were built for the Bayless Machine Company, in 1901 and 1902. A. No.

XQ292. Do you know it? A. We know that it could be done.

XQ293. How do you know that it could be done on those machines? I want to know the basis for your testimony. I want to know the whole basis of your testimony to that effect. A. We know by the length of the screw and the length of the cable and the length of the hook, that it would go up that much.

XQ294. How do you know the length of the screw? A. Because we never made any shorter than 11 inches long.

XQ295. That is the only basis for your knowledge? A. Yes.

XQ296. Now, you know that the screw was 11 inches long and the cable 4 feet long, do you? A. Yes.

XQ297. How do you know that the cable was 4 feet long? A. We had a blue print of the cable, a drawing of the cable.

XQ298. You are going to produce that tomorrow? A. Yes.

XQ299. That is the only method by which you know that the cable was 4 feet long? A. Yes.

XQ300. And how long was the hook? A. Not over 6 inches long. But we have a drawing of the hook at the office.

XQ301. And you are going to produce that tomorrow? A

Yes.

XQ302. Now, when you know those three factors, how does that prove to you that it could be elevated 6 inches above the level, in the Bayless machine? A. Because the slot in the post and the length of the hook and the screw will allow us to go up 6 inches.

XQ303. How do you know they will allow you to go up 6 inches? A. We have tried it, demonstrated it on—

XQ304. When have you tried it and demonstrated it? A. A little while ago, a short time ago.

XQ305. How long ago? A. Why, no more than two or three months ago.

XQ306. Two or three months ago, when this case came up? A. Yes.

XQ307. On what machine did you demonstrate it? A. Well, we demonstrated it there, in the shop.

XQ308. On what machine? A. Why, not any machine in particular; by the laying out the posts and the lengths of cable, and the hook.

XQ309. On the paper? A. Yes.

XQ310. You demonstrated it on paper? A. Yes.

XQ311. But you haven't tried it on any machine, as a matter of actual fact? A. Not on the machine, no, sir, not on that machine.

XQ312. Now on this machine here, on the blue print, kindly measure the distance from the top of the yoke on the screw, which I see is marked A, to the bottom of the cap against which it would abut when it rose. A. I make it 3½ inches.

XQ313. That drawing shows the machine with the wire horizontal, doesn't it? A. Yes.

XQ314. Now, as a matter of fact, in making your measurement just now, you measured up to that line there, didn't you? A. Yes.

XQ315. You measured from the point which I mark X—you measured on the blue print between points corresponding to the points which I marked Fig. 4 of this copy of the patent 691,333, in evidence, and X and Y, respectively, did you not? A. Yes, sir.

XQ316. Now, if the cap was made in the machine in accordance with this Fig. 4 of the patent drawing made in the Bayless machine, in accordance with this Fig. 4 of the patent drawing, then the distance which that screw could rise would be in fact less than what you have given, would it not, by the thickness of the cap? A. Yes.

XQ317. When did you first learn that the Bayless machine

could be raised 6 inches above the level? A. What is that question?

XQ318. When did you first learn that the breast roll in the Bayless machine could be raised 6 inches above the level? A. I think, if I remember rightly, it was when we had it in the shop.

XQ319. When was that? A. When the machine was made.

XQ320. Have you a clear recollection of that? A. Not absolutely.

XQ321. Did you remember that at the time when you made these affidavits, several months ago, in which you spoke about 4½ inches? A. We have demonstrated that it would go up more than that.

(Objected to as volunteered, and not responsive.)

XQ322. Please answer my question. A. No, sir.

(Last two questions read.)

The Witness: I couldn't say about that.

XQ323. You don't know when you remembered it first? A. No, sir, I couldn't tell when.

XQ324. You didn't remember it at the time you made those affidavits, is that right? A. No.

XQ325. And do you remember it any more distinctly now than you did when you made those affidavits? A. No, I do not

Mr. Lyman: The cross examination is closed, except that I should like the privilege of asking further questions, if necessary, after the drawings that are to be produced are produced.

XQ326. Do you remember what the thickness of the cap was on this Bayless machine? A. Three-quarters of an inch.

(Adjourned to Saturday, December 29, 1917, at 10:30 A. M.)

---

607 Old South Building, Boston.
Saturday, December 29, 1917.

Met pursuant to adjournment. Present, as before.

JOHN E. HORNE,

a witness called on behalf of the defendant, being first duly sworn, deposes and says, in answer to questions by Mr. Paul, as follows:

Q1. What is your full name? A. John E. Horne.

Q2. Where do you live? A. In Lawrence, Massachusetts.

Q3. How old are you? A. Fifty-two years.

Q4. What is your business? A. I am treasurer of J. H. Horne & Sons Company, who manufacture paper mill machinery.

Q5. Are you a brother of Byron F. Horne? A. I am a

brother.

Q6. Who testified as a witness here yesterday? A. Yes.

Q7. How long have you been connected with J. H. Horne & Sons Company? A. Well, since 1886, when it was incorporated.

Q8. What has been your particular line of work in connection with this company? A. Well, I have been treasurer all this time and I have also had more or less to do with the details of the work.

Q9. With the manufacturing work? A. Something to do with the manufacturing, yes.

Q10. Who has had the direct charge and superintendence of the manufacturing of your machinery? A. Mr. Charles E. Barrett.

Q11. Mr. Barrett is now superintendent of your company? A. Yes, sir, now is.

Q12. Your company manufactures Fourdrinier paper machines? A. Yes, sir.

Q13. Do you recall the manufacture of two Fourdrinier machines for the Bayless Company of Binghamton, New York? A. I do.

Q14. Those machines were installed at Austin, Pennsylvania? A. Yes, sir.

Q15. Have you ever seen those machines since they were manufactured? A. I have not.

Q16. In what way was your attention first called to the fact that the Bayless Company were in the market for machines? A. I believe they wrote us or wired us—no, I think they wrote us that they were in the market for paper mill machinery, and I don't just remember, but I expect my brother made the trip out there immediately, which was his custom.

Q17. I call your attention to a letter from the Bayless Pulp & Paper Company to J. H. Horne & Sons Company, dated December 14, 1900, and ask you to refer to that letter and state whether that refreshes your recollection in reference to the way in which this matter came up (handing letter to witness, who reads the same)? A. Well, I should say—yes, this letter was received by us.

Q18. Was that the beginning of the matter? A. That, I think, was the beginning of the business between us and Bayless.

(Said letter is marked "Defendant's Exhibit V-11.")

Q19. Do you recall whether your brother did make a trip after the receipt of this letter to see the Bayless Company? A. Yes, I am quite sure that he did make a trip to see Mr. Bayless.

Q20. Do you recall any conversation with him after his return in respect to any requirements in connection with these machines? A. Yes, I do.

Q21. What do you remember about that? A. Why, I remember that he returned and asked for a vertical adjustment to be made, something new to us, and that we set about to try and do it.

Q22. Do you remember anything about the requirements of that vertical adjustment? A. Why, yes. They wanted an arrangement whereby they could raise and lower the breast roll end of the Fourdrinier wire, and to do it if possible while the machine was in motion.

Q23. Anything said about the purpose of that? A. Yes. It was to facilitate speeding up the machine, getting the water out of the stock faster through the wire.

Q24. Do you recall at this time what was to be the amount of this adjustment, what was said at that time about it? A. I can't just exactly remember the inches, the number of inches that that was to be adjustable.

Q25. What, if anything, did you have to do with the getting up of a device to meet this requirement of Bayless; that is, what did you have to do with it, personally? A. Well, being somewhat of a mechanic and always being in the shop to some extent, I talked this over with Mr. Barrett, who I always talk with when new things come up.

Q26. And was a device worked out for that purpose? A. Yes, it was worked out.

Q27. How was it represented; what was done towards showing what it would be? A. Why, we made the drawings of it.

Q28. What kind of drawings were made; I mean by that, did you make a general view? A. Yes, we made—well, there wasn't—yes, there was a general view made of the whole machine with that improvement added, incorporated in the drawing.

Q29. Have you seen that drawing here this morning? A. Yes; this tracing is it (indicating).

Q30. That is the drawing which is marked "Defendant's Exhibit V-5"? A. That is it.

Q31. You recognize that as the general drawing of the machine showing this adjustment? A. Yes.

Q32. Was that made before the machines were constructed? A. Yes, it was; yes, sir.

Q33. In building the machines was the plan shown in this drawing followed? A. I don't quite understand.

Mr. Paul (to the stenographer): What is that question?

(The last question is read.)

Q34. That is, was the design which you have here, with this device, was that followed in the building of the machines? A. Oh, yes; yes, sir, it was.

Q35. What would you say as to whether the exact dimensions of the device were followed as shown in this drawing? A. Well, I should say that the exact dimensions wasn't followed.

Q36. What was your custom as to that in the building of machines of this kind? A. The custom was for the draftsman to make these drawings and then when they got into the shop and when the castings were set up and any little difficulty arose, why, they would be changed so that we would overcome the difficulties and without changing the drawings—which is a very customary thing for us to do.

Q37. Do you know whether, in this particular instance, there was any change in the detail of the drawing or not? A. Well, no, I couldn't say; I couldn't say for sure, but I presume there was, for there always is in all sorts of machines made, little changes.

Q38. Were there any specifications prepared for these machines? A. Yes.

Q39. Have you seen those specifications here this morning? A. Yes, sir, right there (indicating).

Q40. That is the paper marked "Defendant's Exhibit V-4"? A. Yes, sir, that's the specifications for those two Bayless machines.

Q41. I notice that the specifications are in typewriting and that there are quite a number of pen and ink and some pencil changes on them. What is the explanation of those changes? A. Well, these original specifications were gotten up from the dimensions given in his inquiry and then, upon my brother going to see Bayless, he had changed his mind and wanted a little wider width, and these figures was erased and the new ones was put in its place showing the widths which we worked to.

Q42. On the second page there are some changes in pencil, I think. Do you know anything about those? (Witness looks at said page.) A. Yes. These was extra requirements wanted on the machine that we hadn't known of when these original specifications was written.

Q43. In the second paragraph on the second page the words "new up and down motion" are written in pencil? A. Yes; that is my writing.

Q44. Were those written by you? A. Yes, sir.

Q45. And when? Prior to the time when the machines were

constructed? A. Yes, sir.

Q46. What did those words, "new up and down motion," refer to? A. It referred to that—what afterwards become that vertical patent, vertical adjustment patent.

Q47. What is shown in this tracing, "Defendant's Exhibit V-5"? A. Yes; it refers to this arrangement here (indicating).

Q48. The adjustment at the breast roll end of the machine? A. Breast roll, yes, sir.

Q49. Was any patent applied for and taken out on that machine with this new adjusting device? A. There was, yes, sir.

Q50. By whom was the application for patent made? A. By Charles E. Barrett and myself.

Q51. And you are the J. E. Horne who is mentioned as one of the patentees of that patent? A. Yes.

Q52. I ask you to look at the patent, which I now hand you, which is No. 691,333, and state whether that is the patent that you now refer to (handing patent to witness, who examines the same)? A. That is the one, yes, sir.

Q53. I notice in Fig. 2 of the drawings of this patent, over the pedestal where the shake rail 3 and the permanent rails come together, there are some dotted lines under the bolts showing lines that are diverging from the top to the bottom of the rail. A. Right there (indicating).

Q54. Yes, those dotted lines there. What do those represent? A. That is to represent a countersunk hole.

Q55. What was the purpose of the countersunk hole in the end of the shake rail? A. It is to allow for the raising of the opposite end of the rail.

Q56. Raising by the device that you have referred to? A. Yes; so as to take the shearing strain off of the bolt that holds the rail on which it pivots.

Q57. I notice that there is a similar showing at the end of the permanent rail. What was the purpose of that? A. Well, that would be for the same reason; that we would raise possibly both rails at this point so as to raise the wire and take the hollowness out of the wire. In case you raise the forward end a few inches, it would raise this a portion.

Q58. What effect would the raising of the forward end of the permanent rail have on the position of the suction boxes? A. Why, it would leave the suction boxes down, you might say, in a hollow.

Q59. No. What would be the effect of the raising of the permanent rail on the suction boxes? Were the suction boxes fastened to the permanent rail? A. No. They are forced up

against the permanent rail but not fastened to it; they are forced up from below.

Q60. And if the permanent rails were moved up on an inclined position, could the suction boxes be afterwards moved up against them? A. Yes.

Q61. So that, with that adjustment, you can give the suction boxes an inclined position at the top? A. Yes, a small amount; a reasonable amount, yes.

Q62. Was that the purpose of showing this socket in the end of the permanent rail? A. I think it was; yes, sir.

Q63. Do you know whether that was used in the Bayless machines; do you recall? A. I don't recall just that detail of that hole, no, and our tracing doesn't show.

Q64. Doesn't show any means of fastening it? A. No.

Q65. Doesn't show the bolt? A. Doesn't show the bolt even, no.

Q66. I call your attention to a manila drawing, that is, a drawing on manila paper, which has been marked "Defendant's Exhibit V-6," and ask if you know what that is (handing said exhibit to the witness, who examines the same)? A. This is a drawing for the pattern shop to guide the pattern makers to make a pattern.

Q67. For what? A. For a post; for what we call the main supporting posts at the breast roll end of the Fourdrinier.

Q68. The same device that is in the Bayless machine? A. Yes, sir. It was made for that particular job.

Q69. For the Bayless machine? A. For the Bayless machine.

Q70. It is so marked? A. It is so marked, and it is a shake column.

Q71. Is the drawing dated? A. Dated April 25, 1901.

Q72. Do you recall this drawing yourself? A. Yes, I have seen that drawing before. I don't see every drawing, of course, but I have seen that because I know we had a good deal of talk about it.

Q73. Did you understand the purpose for which this adjustment at the breast roll end of the Fourdrinier for the Bayless Company was provided? A. Yes.

Q74. What did you understand to be the purpose of giving this vertical adjustment above the level to this part of the machine? A. I understand for different kinds of stock passing over the wire and different speeds; that the water will stay in some kinds of stock longer than it will in others, and the more it is disturbed while passing along here, the less water will come out of it; but if it can lay on the wire quietly, the water will

drain out of it faster; so that it was seen by paper makers' experiments that if they had the wire for one pitch, or level for one kind of paper, it wouldn't answer for all kinds of paper, and as they make several kinds of paper on paper machines—not all kinds, but several kinds—if they had an adjustable arrangement to change the pitch of the wire, why, they could produce more paper by the same machine.

Q75. Why produce more paper? A. Because of the wire not disturbing the stock. That is, if the stock could be left to lay on the wire as it traveled along and not have the wire slip from in under it, the water would seem to trickle out faster.

Q76. In what way would that affect the speed of the machine? A. Why, the water must be all drained out of the paper—pretty much all; a certain per cent, anyway—by the time the paper gets to the couch rolls; otherwise the stock will crush and it won't form into a sheet so as to be taken off on the felt just beyond the couch rolls.

Q77. Are you a paper maker, Mr. Horne? A. No, sir, I am not. Of course, I have seen considerable of it made and I have got a little bit of an idea, but I am not a paper maker.

Q78. Did your company, in building any others of these machines, make any change or anything to take the place of this countersunk opening through which the bolt passes at the end of the shake rail? A. Yes, we have made a change.

Mr. Lyman: What is the question?

(The last question is read.)

Q79. What did you do there? A. We have got a sort of double swing joint.

Q80. Where is that located? A. It is located on the permanent rail post.

Q81. How, in reference to the position of this countersunk opening in the patent? A. Under the countersunk opening.

Q82. And what is its purpose? A. Its purpose is to allow for the movement of this rail in two directions, both vertical and also horizontal motion which it has in the shake, without putting a strain on that bolt that holds the still end of the permanent rail.

Q83. Well, now, in this drawing shown in the patent, where that countersunk opening is provided, will that arrangement permit two movements to the rail—that countersunk opening in the bolt? A. Yes.

Q84. And this new device was for the same purpose as that? A. Yes.

Q85. But it is an improvement? A. But it is an improvement; it has allowed for more of a double motion.

Q86. And wouldn't put any strain on the bolt, I think you said? A. No; relieves the strain from the bolt—any more than the holding down strain.

Q87. Has there been any change in the device at the breast roll end for vertically adjusting the frame carrying the breast roll? A. No.

Q88. Are you still using the device? A. We are still using it, and we have continued to use it on every Fourdrinier we have made since 1901.

Q89. Now, if you desire to vary the amount of adjustment with that device, that is, if, in building the machines, you want to change or vary the amount of adjustment, how do you get at it; what changes do you make? A. You mean for more than this is drawn for?

Q90. Yes; more or less. A. Why, for more than this is drawn, we make the slot in the post longer—higher, you might say; and we make the screw longer and then make the cable shorter. The screw, of course, must extend up to take care of the chance to drop it and leave a long enough thread underneath to pull it through.

Q91. Can you make a considerable change in the amount of adjustment by changes of that kind? A. Oh, yes; yes, we can.

Q92. You don't need to change the plan of construction any? A. No, not a particle.

Q93. Your company did some work for the Bayless Company in repairing the machines after the flood there in 1911? A. Yes, sir.

Q94. Who had particular charge of the negotiations of making the contract? A. Our head salesman, Mr. John N. Davis.

Q95. Mr. Davis is with you? A. He is still in our employ.

Q96. And you understand he is to be called as a witness the first of the week? A. I did understand that, yes, sir.

Q97. You are not personally familiar with the details of what was done at that time? A. I am not, no, sir.

Mr. Paul: That is all.

CROSS EXAMINATION.

By Mr. Lyman:

XQ98. Mr. Horne, will you take a ruler and, by examining that drawing, tell us how much above the level the breast roll could be used on a machine drawn in accordance with blue print, Exhibit V, and the tracing from which the blue print was made, Exhibit V-5? A. This (witness refers to the tracing, Exhibit V-5) is an inch to the foot scale.

XQ99. In this connection, I call your attention also to Fig. 4 of the patent No. 691,333, which shows the construction at the

top of the post. (Witness measures.) A. Well, that would indicate there is 4 inches and a half for the rail to be raised.

Mr. Paul: Better say what you mean by that, Mr. Horne.

A. (Continued.) By this drawing (Exhibit V-5), this simply—but that doesn't mean anything. This drawing—that line, you know, could have been dotted down and indicate that slot. I don't imagine it was ever drawn to be—this isn't the working drawing; it is an assembling drawing.

XQ100. Now, before you measure that, consider your construction—just how high up you can raise that (Witness measures.) You have got to allow for the cap. A. Here is the cap (indicating). That goes right up into the cap. The hole in the cap is nearly as large as the hub; all worm gear; so that—

XQ101. Here is your construction of the cap (indicating Fig. 4 of patent.) A. That is drawn that way, but it isn't exactly like that. The screw doesn't fit the cap as closely as that is drawn.

XQ102. Is the hole in the patent drawing so the fork can go up through it? A. No; goes up in part way.

XQ103. Please take that into consideration—the fact that you have got the cap on your post and that the fork on the screw will not go through the hole in the cap. A. Well, I couldn't tell you, you see, from that just how much higher it would go; but, you see, this is allowed to come down a long ways. But that wouldn't indicate or go any higher, for there is no screw there to go on—no thread; it would simply show the construction—the idea. But it doesn't show the amount; that wouldn't show any amount. This wouldn't signify, to any extent, the particular space that would move; but from the indication of this drawing—that is what you wish?

XQ104. Yes. A. From the indication of this drawing, it would go part way in the cap. It don't show to go but three inches there, but the fact is it goes more than three, I know.

XQ105. My question was confined to the showing on this tracing of the machine, Exhibit V-5. A. Yes.

XQ106. And I understand your testimony to be that, taking the showing on that tracing, the maximum adjustment of the breast roll above the level would be three inches? A. Yes.

XQ107. And in arriving at that figure you disregard entirely the thickness of the cap, don't you? A. Oh, no; no, I do not. I allow partly for that cap. You see, the cap comes up to hold the hub of the gear. The gear sets down—the worm gear sets down into the cap, you see, part way.

(Discussion.)

XQ108. Do you want to change that answer? A. No.

XQ109. Shall I ask you another question or do you want to add to it? A. No; ask me another.

XQ110. Didn't you measure, in arriving at that figure of three inches, up to the top line of the cap as shown on the drawing, Exhibit V-5? A. Yes.

XQ111. And, therefore, didn't you disregard the thickness of metal in the cap itself? A. No, I think I have allowed for it.

XQ112. Is it a fact that the fork of that screw would go right up to the top line of the cap? A. Yes. But you don't —just let me explain that.

Mr. Paul: Answer the question first, then make your explanation. (To the stenographer): Now read the question.

(The last question is read.)

A. No.

XQ113. Well, then, you must deduct from the three inches the thickness of that cap? A. Yes.

XQ114. Now what is the thickness of that cap—three-quarters of an inch? Mr. Barrett said it was three-quarters of an inch. A. I was going to say five-eighths of an inch.

XQ115. Then that figure of three inches ought to be corrected—understanding now that I am talking about the showing on that drawing, Exhibit V-5, and the corresponding blue print, Exhibit V, and nothing else—by subtracting from that three inches five-eighths of an inch or three-quarters of an inch—say five-eighths of an inch? A. No, I don't think so. I don't think the hub of the gear goes down to the inside line of that cap.

XQ116. Isn't it shown as doing so on that drawing? A. No, it isn't shown here. You can't see where the hub terminates in this drawing, Exhibit V-5. I don't think the hub goes down to this outside line—the hub of the gear. Of course, on there it does show it, I admit; but I don't think it is quite right. I don't think the hub goes quite down to the outside line of the cap. I think there is more metal inside under the gear—the worm gear.

XQ117. But if you take the construction at the top of that post to be the same as is shown on Fig. 4 of the patent, then you would have to subtract from that three inches the thickness of that cap, which, according to Mr. Barrett, is said to be three-quarters of an inch? A. Yes; I do so.

XQ118. And that would mean that the maximum vertical adjustment to the breast roll above the level would be two and one-quarter inches, would it not? A. Yes; using your figures that would make it two and one-quarter.

XQ119. My figures are correct, are they not? I am talking now about the showing on the tracing? A. Well, I couldn't

answer that either yes or no, because I don't think that you know where that hub goes to and it don't show here and I am not quite certain, but I believe it is above the outside level of that cap, the outside line.

XQ120. You don't quite get my question. My question was, assuming the construction at the top of that post to be as indicated in Fig. 4 of that patent, then the maximum adjustment above the level on that breast roll, if it was constructed strictly in accordance with the tracing, Exhibit V-5, would be two and one-quarter inches, would it not? (Witness measures.) A. Yes.

XQ121. Now, Mr. Barrett said that the patent drawings were made from the actual apparatus. Is that your recollection? A. I can't remember that.

XQ122. The patent drawings were made some months after the tracing was made, were they not? The patent application was filed June 15, 1901, according to the patent, and the tracing bears the date April 8. A. I can't just remember; I can't just fix those dates in my mind; but I do remember that the patent was applied for immediately; that is, that we consulted the attorneys here and got it under way; but just how much delay there was in it, I don't know. Of course, they don't start about it the very next day, as a rule, making those things. But I would like to have you understand we don't always follow these drawings in the factory.

XQ123. Have you any drawings that show those parts in more detail? A. No, I don't think we have; I do not recall any.

XQ124. Have you made any search for other drawings? A. I haven't.

Mr. Paul: Mr. Barrett was requested to make a search today and will be recalled as a witness in the case.

The Witness: Very likely they will have a few of those details there that I won't know about; but way back, you know, in those early days when we were smaller than we are today we didn't have the detail we have today, although today we don't have enough detail for every order we receive.

XQ125. Do you know whether the screw as used on that first Bayless machine was threaded way down to the fork? A. No, I do not know.

XQ126. Do you know whether that Bayless machine was arranged so that the breast roll could be dropped below the level as well as raised above the level? A. I believe it was arranged so as to be dropped below the level.

XQ127. How much would it go below the level? A. Well, I cannot remember how many inches.

XQ128. Is it your recollection that there was provided in that Bayless machine a total adjustment of six inches, part above the level and part below the level? A. No, I don't dare to say how many inches it was made for; I don't recollect.

XQ129. What was the reason for providing for lowering the breast roll below the level in that machine? A. Why, for making blotting paper.

XQ130. Why did you want to have the wire run up hill for making blotting paper? A. Well, it was the custom for the paper makers to call for an inclined wire for making blotting.

XQ131. Do you know why? A. I do not know the exact reason.

XQ132. Did you have any information as to why they wanted the possibility of raising the breast roll above the level? A. Yes.

XQ133. Any more definite information? A. Nothing more than I have already stated.

XQ134. Have you any more definite information as to that than as to the reason why they wanted it possible to drop the breast roll below the level? A. Yes.

XQ135. Did you talk with Mr. Bayless about it? A. No. I hadn't seen Mr. Bayless up to the time this machinery was shipped.

XQ136. At the time your patent application was filed, were you referred to other adjustments made by other companies for the breast roll end? A. I don't think that we were.

Mr. Lyman: Did you find anything in those letters?

Mr. Paul: No. I haven't gone through them very carefully. Do you want to see these patents (handing papers to Mr. Lyman)?

Mr. Lyman: Yes.

Mr. Paul: Perhaps you have in mind this earlier patent?

XQ137. I find a reference in your patent, 691,333, to a prior patent to C. E. Barrett and J. H. Horne, No. 634,228, which likewise provided a slight vertical adjustment of the breast roll. Are you familiar with that patent? A. Yes, I remember that.

XQ138. And the purpose of the adjustment that you provided in your patent, No. 691,333, was the same as the purpose of the adjustment in the Barrett and Horne patent, No. 634,228, although the mechanism was different, was it? A. The mechanism was different.

XQ139. Yes; but the purpose was the same? A. Practically the same, yes.

XQ140. And your patent, No. 691,333, was an improvement over the other one primarily in that it put the adjusting mech-

anism at the top of the wire where it wouldn't get wet and rust, instead of putting it below the wire where it would be constantly wet? A. That was one reason.

XQ141. Was there any other reason? A. Yes.

XQ142. What was the other reason? A. The other reason was to set the new arrangement on a tight floor, have everything work above the floor. The old one was such that a slot was provided in the floor through which all these legs and stand and sill could work. Of course, the water leaked down through. A tremendous lot of water used here at all times; the water would have gone down through and drenched everything underneath; in fact, they lost a lot of that water which they now save.

XQ143. Please read the passage on page 1, lines 16 to 30, of patent No. 634,228, and see if that is an accurate statement of the purpose of these adjustments (handing paper to witness)? A. Lines 16 to 30, you say?

XQ144. It is the part put in pencil there (Witness reads.) A. What is that question?

(The last question is read.)

A. Well, I am not prepared to answer that question because I am not a paper maker; but I understand from paper makers that that is the fact.

XQ145. In other words, it is a question of drawing? A. Yes.

XQ146. And the placing of the breast roll, whether above or below, depended upon the kind of stock that was being used, and the theory was that if you were using a light weight paper, or a free stock which parted with its water rapidly, you wanted to give the breast roll an elevation above the level so that the water would be carried farther down the wire than it would if the wire were running level; is that it? A. Well, that may be one way of stating it; but the way I understand it worked was that by inclining the wire the natural gravity flow would keep the water or the stock and the water on the wire in one position longer than as though it was level. In other words, there was a gravity force to an inclined wire, while there wasn't a particle of gravity force, nothing but friction, on the level wire, and, by inclining, there would be a little flow towards the couch rolls and the wire wouldn't pull away from in under the stock, while nothing but friction would carry that stock if it was perfectly level.

XQ147. What is your theory of the reason for providing an uphill adjustment, to make the wire run up hill? A. Well, my theory would be to form a sort of rotary motion of the fibers.

The wire would certainly pull out from under the stock if it was running up hill, because the friction would have to overcome the gravity backwards, and there would be a little formation from the twisting of the fibers in connection with the side motion, making a fluffy sheet, very absorbent, the same as roofing felt, which takes its own weight with tar, and such things for making roofing paper.

XQ148. The wire as shown on that tracing, Exhibit V-5, is shown in a level position? A. It is, yes, sir.

XQ149. And that tracing shows as great an adjustment for the breast roll below level as for the breast roll above level, does it not? (Witness measures.) A. Yes, practically so.

XQ150. Do you know how much you can raise the breast roll above level and have the machine work without elevating the suction boxes at all? A. No, I do not.

XQ151. Do you know what the length of the adjusting screw as used on that Bayless machine was? A. I don't know the number of inches in length.

XQ152. Do you understand that, with the breast roll adjusted above the level, the water would drain out from the stock more quickly than it otherwise would, leaving less water in the stock at the time it reached the suction boxes than if the wire was level? A. Yes.

XQ153. Then you would want to elevate the breast roll when you were dealing with quick stock rather than with slow stock would you? A. No, you want to elevate it with the slow stock.

XQ154. This statement that you have read in patent No. 634,228, beginning with line 16 and going to line 30 on page 1, says, does it not, that the "downward pitch is desirable in connection with the wood pulp, which is now largely used in making paper, in which the water drains rapidly"? A. Yes, but I didn't make this statement.

XQ155. Well, then, you don't approve of that statement? A. No, I really don't, no. I don't understand that is quite correct.

XQ156. Well, you think the fact is just the opposite from that statement? A. I understand it is, yes.

XQ157. Well, you really don't know very much about it? A. I am not a paper maker, you understand, and I really don't know that.

XQ158. You say you don't know whether, as the machine was actually constructed for the Bayless Company, the bolt hole at the forward end of the stationary rail was countersunk or not? A. No, I can't say that it was countersunk or wasn't.

XQ159. As that machine was constructed, do you know

whether there was any blocking put under the suction boxes or under the post at the forward end of the suction boxes? A. I don't know that there was any.

XQ160. It wasn't contemplated that there should be any, was it? A. I think not.

Mr. Lyman: That is all.

RE-DIRECT EXAMINATION.

By Mr. Paul:

RDQ161. In getting up this Bayless construction, what were you endeavoring to do, anything more than to furnish Bayless what he wanted? A. Why, that was primarily the object; to give him something adjustable while in motion—adjustable vertically while in motion—which was a new practice for us.

RDQ162. Did you have in mind the patent that was taken out by your father and Mr. Barrett and have in mind improving that device, or were you simply getting up something to sell the machine to Bayless? A. Well, I presume both, because while this patent had been granted to our firm, or to Barrett and Horne—I think it was assigned to the company also—whether or not it was, we hadn't made any of them and there was great objection to them—to the slot in the floor, and being busy doing other things, we hadn't given it as much attention as perhaps we ought to have given it; but when Bayless called for this adjustment, why, we thought it was about time to sit down and try and invent something.

RDQ163. To meet his requirements? A. To meet his requirements, and we did.

Mr. Paul: That is all. You waive signature?

Mr. Lyman: Yes.

(Adjourned.)

Room 607 Old South Building, Boston.
Monday, December 31, 1917, 2 P. M.

Met pursuant to adjournment. Present, as before.

CHARLES E. BARRETT,

recalled for further examination, testified in answer to questions by Mr. Paul, as follows:

Q327. Mr. Barrett, since you were on the stand in this matter on Friday, have you made some further investigation and given some further consideration to the matters that were considered in that examination for the purpose of ascertaining further facts and refreshing your recollection in reference to the matter? A. I have.

Q328. Were you able to find any additional drawings of any of these parts of date prior to the date of the building of the Bayless machines? If so, what did you find? A. On the cable.

Q329. You found a drawing of the cable? A. Drawing of the cable, yes, sir.

Q330. And this (indicating) is the drawing which you brought here this morning? A. Yes, sir.

Q331. This drawing is dated May 17, 1901, is it? A. Yes, sir.

Q332. That is prior to the date of the building of the Bayless machines? A. Yes, sir.

(Blue print of cable marked "Defendant's Exhibit V-12.")

Q333. You produced on Friday a blue print of a screw which is marked "Defendant's Exhibit V-10." What is the date of that drawing (handing blue print to witness)? A. That is February 18, 1903.

Q334. And that is later than the construction of the Bayless machines? A. Yes, sir.

Q335. And this is not the drawing from which that device was constructed? A. No, sir.

Q336. What is your recollection as to whether this drawing is like the construction of the screw in the Bayless machines, or have you any way in which you can determine that? A. I think we have no way to determine. It was made exactly like that.

Q337. This drawing does not show the thread extending down to the yoke? A. No, sir.

Q338. What is your recollection as to that? A. I couldn't say on the other one, but I should say it was threaded down to the neck, that is, within an inch of the neck, as we always have done that.

Q339. The blue print marked "V" and tracing marked "V-5" show the thread running down to the yoke, do they not? A. Yes, sir.

Q340. But you are unable to say from recollection whether it actually did run down? A. I couldn't say, no, sir.

Q341. That is as I understand. A. Yes, sir.

Q342. And you have no means from other drawings at the factory of positively determining whether the thread actually ran down to the yoke, as I understand you? A. No, sir.

Q343. Is it your recollection that it did? A. I should say it did.

Q344. But you are not sure about it? A. Not sure.

Q345. Now, what is this drawing, this blue print that you have brought in here today, which I now place before you (handing blue print to witness)? A. That is the hook that

goes under the "U" shake frame on the breast roll. This drawing is dated March 14, 1903.

Q346. Have you been able to find any drawing of the hook made prior to the date of the Bayless machines? A. No, sir.

Q347. Now, how do you account for the fact that you have no drawing either of the screw or of the hook made at a date prior to the building of the Bayless machine? A. They were made from a sketch. Being the first machines made that way, we had no drawing, no drawing made of the hook, showing how we made it.

Q348. How did you happen to have this manila drawing of the post; why would you have a drawing of that part? A. We had to have that before we can make the pattern.

Q349. That was made for the pattern makers? A. Yes, sir.

Q350. How did you happen to have a drawing of the cable? A. We had that to order the cable by.

Q351. You didn't make this cable yourself? A. No, sir; that was ordered.

Q352. This drawing was made to order the cable by? A. Yes, sir.

Q353. And the manila drawing, V-6, was made for the pattern maker? A. Yes, sir.

Q354. To make the pattern? A. Yes, sir.

Q355. These parts, the hook and the screw, how would you make those up? A. Those were made after the first—I don't know whether it is made on the second machine or not. We made so many that we can't tell.

Q356. But for these first ones you would simply make those up in the shop? A. Make them up in the shop.

Q357. How would they be made—blacksmith work? A. Blacksmith work.

Q358. How would this screw be made? A. Forged in the blacksmith shop, too.

Q359. And the screw was made by the blacksmith and threaded— A. In the machine shop.

Q360. And there wasn't any drawing? A. No drawing for either one.

Q361. If there was, you can't find them? A. No.

Q362. If you had them you could find them? A. Yes.

Q363. You don't destroy any drawings? A. No.

(Blue print of hook is marked "Defendant's Exhibit V-13.")

Q364. This blue print of the hook shows a pencil mark across the lower part about an inch from the lower end? A. Yes, sir.

Q365. Both on the side elevation and on the front elevation. What does that mark signify? A. That signifies that the black-

smith would cut that off to that mark.

Q366. Does that show the way you actually made them, that much shorter? A. Yes, sir.

Q367. Was that done from the beginning? A. As far as we know.

Q368. When this drawing was made? A. As far as we know.

Q369. As far as you recollect, they were always made that much shorter? A. Yes, sir.

Q370. That pencil mark wasn't put on there recently? A. No, sir.

Q371. You cannot state just when that was put on? A. Oh, several years ago.

Q372. And is it your recollection that they have always been made that way since that drawing was made? A. Yes, sir.

Q373. Has there been, from the beginning of your manufacture of this device, any change in the top of the post, that is, the cap and the gear, and those parts at the top of the post? A. No, sir.

Q374. What have you used for the gear? A. We used the gear that we use on our beating engine.

Q375. The same gear? A. The same gear, yes, sir.

Q376. Always the same? A. Always been used, yes, sir.

Q377. And is the cap the one that is shown on this manila drawing, the detail; does this original manila drawing show the detail of that cap? A. No, sir.

Q378. That only shows the top of the post? A. The top.

Q379. It shows the top of the post? A. Yes.

Q380. Has there been any change in that design of the top of the post? A. No, sir.

Q381. Have you any drawing of that cap? A. No, we haven't.

Q382. Has that always been the same since the first machine was built? A. Always been the same. That was used first on a beating engine.

Q383. The same cap? A. The same cap.

Q384. And you didn't make a drawing and a pattern for that cap? A. No, sir.

Q385. The same cap as used on the beating engine? A. Yes, sir.

Q386. Have you made a layout following the blue print V and the tracing V-5 as closely as possible in making the parts of actual size? A. Yes, sir.

Q387. And is this (indicating large drawing) the drawing laying out those parts? A. Yes, sir.

(Said drawing is marked "Defendant's Exhibit V-14.")

Q388. Does this top part of the drawing show the actual size of those parts, following the tracing? A. Yes, sir.

Q389. What portion of the shank of the screw nearest the yoke is shown not threaded—how much? A. One inch.

Q390. Assuming that those Bayless machines did have the arrangement, were assembled in accordance with the position of the parts in the blue print V and the tracing V-5, how much adjustment above the level could be given to the shake frame? A. As far as we can figure it out, it was 4 inches.

Q391. And how much below the level? A. Go down 3 inches below the level.

Q392. Then, if the parts followed this blue print and tracing and were assembled with the hook in the same position shown in that tracing, on those machines you could go substantially 4 inches above the level and go 3 inches below? A. Yes, sir.

Q393. What change would be required in any of the parts, the position of any of the parts, using the same length screw, the same gear, the same cap and the same length of cable, to permit the device to be adjusted higher—what change would be required? A. We would make the hook shorter.

Q394. Make the hook shorter? A. Yes, sir.

Q395. Would you change its position any? A. Change the position of the hook.

Q396. Which way would you put it? A. Down.

Q397. How much? A. 2 inches.

Q398. If the hook were 2 inches lower, how much would the device adjust above the level? A. 6 inches.

Q399. And how much would it go below the level then? A. 1 inch.

Q400. You say the whole movement, as made according to this layout, would be 7 inches? A. Yes, sir.

Q401. And you could have that either 4 inches above the level or 3 inches below, or you could change it—could you have the whole seven inches above the level? A. No; 6 inches.

Q402. Could you have it 7 inches above and none below. A. I don't think we could.

Q403. You wouldn't have room to fasten on the hook? A. No, sir.

Q404. But you could have 6 inches above and an inch below, or 5 inches above and 2 below, or 4 inches above and 3 below, owing to the position of the hook when it was fastened on to what you call the U shake frame? A. Yes, U shake frame.

Q405. Have you any means of determining where, in those Bayless machines, the hook was fastened on to the U shake

frame? A. No, sir, we can't tell.

Q406. You can't tell? A. No.

Q407. It may have been the position where it gave it anywhere from 4 inches to 6 inches above the level; is that right? A. Yes, sir, that is true.

Q408. And anywhere from 1 inch to 3 inches below the level? A. Yes, sir.

Q409. Do you know whether you have varied this position of the hook on the U shake frame in other machines? A. Yes, we have made them.

Q410. You have changed the amounts that could be adjusted above or below the level by changing that position? A. Yes, sir, by changing the hook.

Q411. And have you made any change at any time in the length of the cable? A. Yes, sir.

Q412. Would that accomplish the same thing, by changing the length of the cable? A. Yes, sir.

Q413. When you were on the stand Friday you said, in answer to a question on cross examination, that the patent drawings were made from the actual construction. What did you mean by that? A. That as far as we know it was made from the actual construction of the machine.

Q414. Do you mean that the draftsman had the machine before him? A. He must have had the tracing, I think.

Q415. Might it have been a blue print? A. Yes, sir; blue print of the elevation.

Q416. Well, have you any recollection that the draftsman came out there and saw the machine itself? A. No, I haven't.

Q417. When you state he made it from the actual construction, did you mean that he made it from the machine itself? A. I couldn't say that he did because that is so long ago.

Q418. You don't remember? A. I don't remember.

Q419. You didn't mean to give the impression that you remembered he saw the machine? A. I don't remember; no, sir, I don't.

Q420. You don't know about that? A. Don't know about that, no, sir.

Q421. That patent was taken out through the office of Crosby & Gregory, was it not? A. Yes, sir.

Q422. Which is now the office of Heard, Smith & Tennant, where this testimony is being taken? A. Yes, sir.

Q423. Do you remember a machine that was made for the Sorg Company at Middletown? A. Yes, sir.

Q424. Do you remember any detail in reference to the amount of adjustment on that? A. I don't remember it, no, sir.

Q425. You don't remember how much that was above or how much below? A. No, sir.

Mr. Paul: That is all I want to ask Mr. Barrett.

CROSS EXAMINATION.

By Mr. Lyman:

XQ426. Mr. Barrett, what is it in this layout of yours which you have just made, which bears the date December 29, 1917, and is marked "full size," that limits the upward movement of the breast roll above the level to four inches? Show me what dimension it is from there to there (indicating)? A. The top of the yoke of the screw, which is marked "B" will only go as high as the line which I mark "A," which represents the bottom of the cap.

XQ427. The line from A to C represents the thickness of the cap? A. Yes, sir.

XQ428. And the line marked "C" represents the bottom of the hub of the worm gear? A. Yes, sir.

XQ429. And also the top of the cap? A. Yes, sir.

XQ430. The line which I marked "D" represents the top of the hub of the worm gear? A. Yes, sir.

XQ431. (By Mr. Paul): The top of the cap comes to the line that is marked "E" and is recessed to the line "C," so that the hub of the worm gear comes down to the line marked "C" in this recess? A. Yes, sir.

XQ432. (By Mr. Lyman): This blue print of the hook, which is marked "V-13" apparently represents, in the white lines, the construction that has been used by you in this hook up to March 14, 1903, with a correction in pencil made at some time thereafter for future hooks, does it not? A. The correction in pencil was made at the date the drawing was made, if I recollect right.

XQ433. Did you make that correction in pencil? A. I made that myself, yes, sir.

XQ434. Well, then, the uncorrected drawing shows the form of the hook as used before the date of that drawing, March 14, 1903, does it? A. We have no record, no way of telling how the hook was made before this drawing was made.

XQ435. The presumption is that it was made in accordance with that drawing until the correction was put on? A. Similar; but we can't say it was just like it.

XQ436. There is every reason to suppose that in the Bayless machines the hook used was like that shown on this Exhibit V-13, uncorrected? A. Similar to that. I won't say it was made exactly like it because it was made from simply a sketch and no drawing or anything to work by.

XQ437. Well, it would be your judgment, then, that this layout that you have here, that you just made, December 29, 1917, shows the hook in the position in which it was used on the Bayless machines? A. I couldn't say that hook was in the same position. It might have been lower down; I can't say. We have no record, no way of telling how that hook was placed on that Bayless machine.

XQ438. What is this line which I mark "F" on your layout? A. That is the "U" frame, bottom of the "U" frame.

XQ439. Well, you can't put the hook with its bottom lower than the line "F" can you? A. Yes, sir, down to the bottom of this.

XQ440. Down to what? A. Down to here (indicating).

XQ441. What is the line "G" which you indicate in answer to my question? A. That is the rail which runs along here; it is a steel rail, one inch thick, and the hook comes down to there (indicating). It is done some times that way.

XQ442. Was it customary with you to put the bottom of the hook opposite the line "F" or opposite the line "G"? A. It has been customary opposite the line "F."

XQ443. Presumably that was the construction in the Bayless machines? A. We presume so, we don't know.

XQ444. Now, you have drawn in your hook in the layout to conform with the corrected showing of the hook on Exhibit V-13, have you? A. Yes, sir.

XQ445. If, however, the hook had been used as shown on Exhibit V-13, uncorrected, the top of it would have come 9½ inches above the line "F"? A. Yes, sir.

XQ446. Whereas, as you have shown it on your layout, the top of the drawing comes only 7½ inches? A. Yes, sir. But we have no means of telling whether that one was made like this drawing; might have been made shorter. We made it different from this. We have another, later one, we have made shows a good deal shorter than this—made for a later machine.

XQ447. (By Mr. Paul): Referring to the hook now? A. Yes, sir.

XQ448. (By Mr. Lyman): Now, if the top of the hook had come 9½ inches above the line "F" instead of 7½ inches above the line "F," as you have drawn it, that would mean, would it not, that the possible adjustment of the breast roll above the level would have been two inches less than the four inches which you have found? A. Yes, sir.

XQ449. The construction of the cap on this layout was made from parts that you now have? A. Yes, sir, and use in stock.

XQ450. It wasn't made from the actual Bayless machines?

A. No, sir, wasn't made from the Bayless.

XQ451. When was this Sorg machine that you speak about put in? A. I couldn't remember now. About ten years ago, *as I remember it.*

XQ452. Will you please look at the drawing Fig. 4 of the Barrett and Horne patent, No. 691,333, and tell me whether it is not probable that that drawing was made from actual parts which the draftsman had before him when he made it? A. I couldn't say about that, couldn't tell.

XQ453. Those details shown there are not shown on the blue print which you think he had before him, are they? A. No, sir.

XQ454. So that, in all probability, he had to have, in order to make that drawing, the actual parts of a machine? A. I should think so, yes, sir.

XQ455. Will you look at Fig. 2 of that patent. You see the bolt marked "15"? A. Yes, sir.

XQ456. And another one at the right? A. Yes, sir.

XQ457. And I see lines just below those two bolts which are diagonal? A. Yes, sir.

XQ458. What is the meaning of those lines? A. That was made so that the top of the rail could swivel on the bolt.

XQ459. The top of the forward rail, the shake rail? A. Shake rail, yes, sir.

XQ460. What was the reason for countersinking the bolts at the forward end of the stationary rail? A. That wasn't necessary; never done that.

XQ461. What is that block underneath the two bolts which they apparently take into? A. That is the top of the post.

XQ462. Stationary post? A. Top of the stationary post, yes, sir.

XQ463. And, in view of your further investigations, what is your opinion as to the maximum adjustment above the level that there was provided in that Bayless machine? A. We can't tell now; don't know just how much that was. We don't know just where the hook was placed on the U frame to get the adjustment.

XQ464. And your best judgment would be that it was 4 inches? A. I wouldn't want to say now.

XQ465. Well, that is the probability, is it not? A. Yes, sir, that is the probability.

XQ466. You have made a diligent search to see if you can find any drawings, have you? A. We have searched the whole place. We can't find anything else pertaining to the Bayless machine. They have all been made since that machine was

made, all of our working drawings. We had no working drawings when we made the first Bayless machine, either the hook or screw.

XQ467. Will you tell us again what was the reason, as you understand it, for making the breast roll adjustable on the Bayless machine? A. As I understand, he wanted to get more pitch on the wire; that is, he could elevate the wire and get more speed on the paper, speed on the machine.

XQ468. Depending upon the grade of stock you were running with? A. Yes, sir.

XQ469. Whether it was free stock or slow stock? A. Yes, sir.

XQ470. Please look at the tracing, Exhibit V-5, and the blue print corresponding, Exhibit V, particularly at the hook. That indicates, does it not, that the bottom of the hook is opposite line F, as you have indicated it on the layout? A. Yes, sir.

XQ471. Now, please measure the length of the hook as shown on the tracing Exhibit V-5 and the corresponding blue print Exhibit V. A. The whole length?

XQ472. Yes. (The witness measures.) A. 10 inches.

XQ473. There is every reason to suppose, is there not, that the hook on that Bayless machine was placed as shown on the tracing, Exhibit V-5, and the corresponding blue print, Exhibit V? A. I couldn't say; we have no record, no way of telling.

XQ474. Well, the cable is shown drawn absolutely at scale there, just four feet long, is it not, on that tracing and blue print? (Witness measures.) A. It seems to be.

XQ475. And it is more than probable, is it not, that the hook was likewise drawn to scale? A. I don't think so because we have no drawing ever made of it.

XQ476. You don't remember about it, I understand? A. We don't know.

XQ477. But there is every reason to suppose that if the cable were drawn to scale, the hook also was drawn to scale, is there not? A. I wouldn't say it was.

XQ478. Well, I understand that you won't say--that you haven't any recollection that will enable you to say definitely? A. No.

XQ479. But I am asking you whether it isn't altogether probable that the hook was drawn to scale? A. It might have been.

XQ480. Wouldn't you naturally expect that it would have been so? A. Not on this first machine that we made, be-

cause the hook was made by the blacksmith, by a little—simply a sketch made by chalk on a board.

XQ481. At all events, the length of that hook as shown on the tracing, Exhibit V-5, and the corresponding blue print, Exhibit V, is substantially the same as the length of the hook on the blue print drawing uncorrected? A. Yes.

XQ482. Now, I see on the table here a screw, which I judge to be such a screw as was used in the breast roll adjustments of some of these machines? A. In the later machines. I wouldn't say it was used in the first one.

XQ483. You don't know? A. I don't know.

XQ484. Where did that screw come from? A. This one?

XQ485. Yes. A. It came from out of one of the machines we made later, in later years.

XQ486. And that shows a space of about an inch and a half between the top of the yoke and the bottom of the thread? A. Yes, sir.

XQ487. How far up could the bottom of the threaded portion go, as indicated on the layout? A. Up to the bottom of the gear, the line indicated at C on the layout.

XQ488. On your layout, the distance from the top of the yoke at B to the line C is five inches, is it? A. Yes, sir.

XQ489. Now, your drawing of the screw, which is in evidence as Exhibit V-10, indicates a space of one and one-half inches between the top of the yoke and the bottom of the screw thread, does it not? A. Yes.

XQ490. If the Bayless machine had a screw constructed in accordance with that drawing, then that would mean, would it not, that the breast roll could rise above the level only five inches, less one and one-half inches, which equals three inches and a half? A. Yes.

XQ491. Isn't it, therefore, probable that the maximum adjustment of the Bayless machine above level was less than four inches? A. I couldn't say about that because the screw in that might have been threaded way up to the yoke.

XQ492. In view of the drawings and the other evidence, isn't it probable that it was less than four inches? A. Probable, yes.

XQ493. You said that it was your understanding that Bayless wanted this adjustment so as to be able to run his machine faster on certain grades of stock? A. That is my understanding.

XQ494. Faster than what? Faster than he had been running previously? A. Yes, sir.

Mr. Lyman: That is all.

RE-DIRECT EXAMINATION.

By Mr. Paul:

RDQ495. If the screw in the Bayless machine was threaded clear down to the yoke, as indicated in the blue print Exhibit V and the tracing Exhibit V-5, what would then be the total adjustment above the level, the other parts remaining the same? A. Four inches.

RDQ496. Haven't you figured in the layout there—haven't you figured that there was some part of the screw that wasn't threaded in that layout? A. The draftsman, he made it from this screw.

RDQ497. Yes. But what I want to know is, suppose on this layout, instead of having an unthreaded portion between the top of the yoke at the line B and the bottom of the screw thread, that screw thread was run clear down to the yoke? A. Yes, sir.

RDQ498. As indicated on the blue print Exhibit V and the tracing Exhibit V-5. How much vertical lift would you have then? A. We would have four inches.

RDQ499. You would have four inches? A. Yes.

Mr. Paul: I think that is all.

RE-CROSS EXAMINATION.

By Mr. Lyman:

RXQ500. Was the yoke on the screw in the Bayless machine identical with the yoke on this screw which you produce here? A. We should say it was similar; but it might have been shorter, because we have no record of his screw that was made, no drawing; we never could find any drawing when that machine was made.

RXQ501. The length of the yoke portion of this specimen which you produce is four inches, is it not? A. Yes, sir.

RXQ502. The draftsman has shown the yoke on the screw in the tracing Exhibit V-5 and the corresponding blue print V as being three inches long, has he not? (The witness measures.) A. Yes.

RXQ503. If that yoke portion in the Bayless machine was four inches long, as it is in this specimen which you produce, then the adjustment on that Bayless machine of the breast roll above the level would have been not over three inches, would it not? A. That (referring to Exhibit V-5 and Exhibit V) wasn't made for working drawing, and this (referring to layout, Exhibit V-14) is the exact reproduction of this screw, the worm gear and the cap.

RXQ504. Assume that the position of the hook and of the cable were exactly as shown on the tracing Exhibit V-5 and the corresponding blue print, Exhibit V, and that the screw used

were that which you have shown in your lay-out drawing; please measure on Exhibit V-5 and tell how much possible vertical adjustment above the level of the breast roll there would have been? (The witness measures.) A. That wouldn't show but three inches.

RXQ505. Still making the assumption stated in the last question, how much adjustment below the level would there have been on the Bayless machine? (The witness measures.) A. This went down three inches.

Mr. Lyman: That is all.

Mr. Paul: You waive signature?

Mr. Lyman: Yes.

JOHN NEWMAN DAVIS,

a witness called on behalf of the defendant, being first duly sworn, deposes and says in answer to questions by Mr. Paul, as follows:

Q1. What is your full name? A. John Newman Davis.

Q2. Where do you live? A. I live in Methuen, but my business is in Lawrence, Mass.

Q3. What is your business? A. Well, I was employed to develop and sell the machinery of the J. H. Horne & Sons Company—paper machinery.

Q4. What is your age, Mr. Davis? A. Forty-three.

Q5. How long have you been with J. H. Horne & Sons Company? A. Since the first day of November, 1910.

Q6. How long have you been connected with any company manufacturing paper machinery? A. I went with the Pusey & Jones, of Wilmington, Delaware, the latter part of 1891.

Q7. Were you with them continuously until you went with the Horne & Sons Company? A. Yes.

Q8. With what part of the business were you connected while you were with the Pusey & Jones Company? A. For about a year and a half as stenographer, and after that as a salesman; the last three years as general sales agent.

Q9. You were with the J. H. Horne & Sons Company at the time of the flood at Austin, Pennsylvania, that injured the plant of the Bayless Company, were you not? A. I was.

Q10. What, if anything, did you have to do with the proposition for repairing any of the Bayless Company machinery and the carrying out of such repairs? A. I was asked by Mr. Bayless to go to the plant and inspect the 136-inch machine, which was the machine which was severely damaged, to give him an estimate of the cost of repairing it and to take a contract if

the price was satisfactory.

Q11. Well, now, go on and say generally what was done, what you did following that, if you did go to the plant? A. I did go to the plant and examine it, and made an estimate of the cost; made him a proposition, which is all shown by our correspondence, which was accepted, the contract made and the machinery built and delivered and erected. That was on the 136-inch machine.

Q12. In what condition were the plant and machinery when you went out there? A. Well, the 136-inch machine was pretty generally buried in debris, and we had the machine cleaned off the best we could so that we could get at it and inspect it to see its condition. That particular machine got the brunt of the damage because it was nearest the river. The small machine was not damaged because the 136-inch machine protected it.

Q13. This was the 136-inch Fourdrinier machine that had been sold to that company by the J. H. Horne & Sons Company? A. By the Horne Company, yes, sir.

Q14. What did you do in reference to ascertaining what was required to put the machine into condition? A. We had such parts as were broken, after they were dug out, put on the machine room floor so that we could see whether or not they could be repaired, and the parts that were not broken cleaned up to see if they had cracks in them, etc., because Mr. Bayless wanted to keep the cost of repairs down to the minimum, his expense was so great. He asked us that particularly.

Q15. After you returned to Lawrence did you have correspondence with the Bayless Company in reference to this matter? A. Yes.

Q16. And are these repairs and list of the repairs and work which was done disclosed by this correspondence? A. Yes.

Q17. Did you write a letter giving a report of what had to be done on the machine? A. Yes.

Q18. Was that letter written by you? A. Written by me.

Q19. And have you that correspondence with you—the letter press books showing the letters written by the Horne Company and the original letters from the Bayless Company in reference to this matter of repairs? A. Yes.

Q20. Are these the letter press books (indicating)? A. Yes, these are the ones.

Q21. And these are the letter press books showing the letters written by the Horne Company? A. They are.

Q22. And were most of the letters relating to this matter of repairs dictated by you? A. The majority of them, yes.

Q23. Those that were written by you, are they initialed in

some way so as to show, or signed? A. I think they were all signed.

Q24. And can you tell by an examination whether any particular letter was written by you? A. I can.

Q25. What is the date of the letter in which you give the report showing what repairs should be made? A. November 24, 1911.

Q26. Was any contract prepared after this report was made by you? A. There was.

Q27. Covering the repairs? A. Yes, sir.

Q28. Have you that contract here? A. I believe it is here.

Q29. Have you any duplicate of the contract or duplicate memorandum containing any items indicated by yourself that were not on the original contract? A. I have (producing a paper.) After the contract was received, I made a list of what was to be done for the shop use, as I was anxious they should build what was covered in the contract and no more. This (indicating paper) gives the list of parts to be furnished on the machine, and this (indicating another paper) gives the list of parts to be furnished in connection with the beaters.

Q30. I think we are not interested in the matter of the beaters and I think you might just retain that paper. A. Well, I only brought that for the fact that our contract covers beater repairs, so that if I didn't have this it wouldn't coincide with that.

Q31. Yes; but with that understanding, I think we will not need to go into the beater repairs. A. All right.

Q32. We are only interested in the repairs on the Fourdrinier, and I will ask you first if this (handing paper to witness) is the contract that was prepared to cover the repairs? A. That is the contract covering the repairs.

Q33. I notice on the front of this certain yellow sheets with pencil memoranda on them. What are those sheets? A. That was an understanding I had with Mr. Bayless, that if there was any parts we found that we could use, we would give him credit for them, or if there were any parts we found we could not use, we would have to charge him for them; and this was a little memorandum I attached to that there to tell what new parts were necessary or what old parts could be used again.

Mr. Paul: This repair contract has been marked "Defendant's Exhibit V-7." We will refer to it by that number.

Q34. Is this (handing paper to witness) the paper that you say that you prepared for the shop? A. That is the one, yes.

(The shop paper is marked "Defendant's Exhibit V-15.")

Q35. Will you refer to the contract and state particularly

what parts were to be replaced on what is known as the wet end of the Fourdrinier machine. Can you get that from the contract? A. That is on the first page, under the item "Fourdrinier Parts."

Q36. Those all stated there? A. Yes.

Q37. What are the parts designated as "new end posts, new style, for supporting one end of shake and stationary rails, with shake rail section working on pin for raising and lowering breast roll end; use old cross brace"; what does that refer to? A. That refers to the frame at the suction box section of the Fourdrinier parts nearest the couch roll.

Q38. What are the posts that are spoken of there? A. Well, that is the post in the frame—the same thing. They support one end of the shake rail and one end of the stationary rail at the suction box end.

Q39. Those are the posts shown in the blue print, Exhibit V, at the end of the shake rail supporting both one end of the shake rail and one end of the permanent rail? A. That is right.

Q40. What was the significance of the expression "new end posts, new style"; do you recall? A. Yes. In the original, the shake rail was attached to this post by means of a pin going down through, and when the breast roll end was raised there was no section here to support it.

Q41. You mean no section of the post? A. No section of the post. In the new style, we put a section in here, which works on a pin, to enable us to elevate the breast roll end without binding on this pin.

Q42. And what about the support for the end of the stationary rail; was that changed in any particular? A. That wasn't changed in any particular.

Q43. Wasn't that inclined a little, or don't you remember? A. I don't remember.

Q44. I got the impression from some witness or from somebody that that new style post—that that part of the post that supported the end of the stationary rail was a litle inclined; do you recall about that? A. It is on recent machines.

Q45. You don't remember whether it was on that particular post or not? A. I couldn't say.

Q46. It may have been? A. It may have been, yes.

Q47. Now, we come down to the expression, "New Fourdrinier supporting posts at breast roll end with horizontal compensating springs." What does that mean? A. These end posts between the flow box and the breast roll for adjusting the U frame up and down.

Q48. Were both of those posts furnished new? A. They

were.

Q49. What were the "horizontal compensating springs"? A. In this Fourdrinier—

Q50. Referring to blue print, Exhibit V. A. Yes. There were no compensating springs furnished. That was a later development. These horizontal springs on both the back side and the front side take the weight of the Fourdrinier frame as it is shaken back and forth, and, in order to put on those horizontal springs, we had to have new posts here that had bosses cast on them to take the rod which held those horizontal springs.

Q51. What about the mechanism, the lifting mechanism in connection with the posts; was that new? A. No, all old.

Q52. Have you anything on your memoranda referring to that—the one you made for the shop? A. I refer to that particularly on here because I didn't want them to furnish any new lifting rig.

Q53. What memoranda have you on that? A. I simply added to what was written on here—I added with my pen—

Q54. You mean what was written on the contract? A. Written on the contract, with my pen, in addition to the "new Fourdrinier supporting posts at breast roll and with horizontal compensating springs," I added: "Old lifting rig."

Q55. What did that mean? The old lifting rig was to be used? A. Was to be used.

Q56. And what did that old lifting rig include? A. Hand wheel, cross shaft, worms, worm wheels, top screws, and cable.

Q57. Do you recall whether there were any other parts relating to this wet end of the Fourdrinier that were furnished; that were not in this list—anything come up later, do you recall? A. I don't remember any.

Q58. If there was anything it would be specified in these letters? A. Naturally.

Q59. Were you familiar to any extent with the machines that were sold by the Pusey & Jones Company while you were with them? A. Yes.

Q60. In what way did you become familiar with those machines—in the selling end or the construction end, or both? A. Both. The old fashioned way of doing business at that time was to get an inquiry for a machine and turn it over to one salesman. He would have a conference with the customer, make the specifications, get the order, make the contract, make the shop orders, see the drawings made, follow it through the shop, see that it was shipped, see it started and then forget it and start another one. So a salesman in those days had to be

an engineer.

Q61. Did you make sales in that way and follow the machines through the shop, as you have stated? A. Yes.

Q62. So you were familiar generally with the construction and mode of operation of the Pusey & Jones machine? A. Yes.

Q63. Did you frequently see those machines in operation in paper mills? A. Very frequently.

Q64. Did the Pusey & Jones Company make machines for newsprint? A. Yes.

Q65. Was that a considerable portion of their business? A. Yes, sir.

Q66. They made other machines, I suppose? A. Other machines. They made more of these machines than any other kind.

Q67. Was that so from the time you began work with them? A. Yes.

Q68. When you first went with that company, which I think you said was in 1891, about what was the speed of the newsprint machines manufactured by the Pusey & Jones Company? A. 350 to 400 feet.

Q69. Any machines get up to 500 feet while you were there? A. Yes.

Q70. What was the first machine that you recall built by the Pusey & Jones Company that was run at 500 feet as a regular thing? A. It was the machine which we called "The Defender," a 90-inch machine built for either the Glen Falls or the Fort Edward mill, and I think it was the Fort Edward mill. We called it "The Defender."

Q71. Fort Edward and Glens Falls are quite near together? A. Yes.

Q72. Did you ever see that machine in operation? A. I did.

Q73. And did you count its speed? A. I did.

Q74. What part of the machine did you count? A. Bottom calender roll.

Q75. That gave the paper speed? A. The positive paper speed.

Q76. What was the speed of that machine at the time you counted it? A. 504 feet.

Q77. Per minute? A. Per minute.

Q78. You are unable to recall whether that was in the Fort Edward mill or the Glens Falls? A. I am sorry to say I can't recall whether that was the Fort Edward mill or Glens Falls.

Q79. But you saw the machine personally? A. I did.

Q80. Was that a machine which you sold? A. No, I didn't follow it.

Q81. So you didn't follow it up in the manner you have described about the machines you did sell? A. I was going around the country telling about this 500-foot machine and I thought it was pretty near time I saw it myself, whether it was actually running 500, and that was the reason I went to the mill.

Q82. Have you any way of fixing the time when you saw that machine, or approximately the time; can you fix it as being prior to any particular date? A. I think it was about '98.

Q83. 1898? A. 1898. My reason for saying that is that that was the year I was married, and I think it was about that time.

Q84. Think perhaps you were doing more traveling at that time? A. Yes.

Q85. What was the width of that machine? A. 90-inch.

Q86. What was the construction as to the support of the wire—as to whether it was level or below level or above level or whatever it was? A. That had the old Savery shake on it and I think it was about an inch and a half above level.

(No question numbered 87.)

Q88. The wires could be elevated about an inch and a half above level? A. Yes.

Q89. Were there other machines made like that "Defender" machine? A. Yes.

Q90. How frequently were machines of that kind sold along about that time? A. All the Fourdrinier machines that the Pusey & Jones Company made were made off the same design.

Q91. What about the speed of those other machines of that same type? A. The news machines were running about 450 when the "Defender" was running about 500.

Q92. I mean the machines constructed after the "Defender." A. You mean the type of machines?

Q93. Yes; the same machines. I understand you to say that the Pusey & Jones Company made other machines of the same design as the "Defender" after the "Defender." A. Yes.

Q94. What about the speed of those machines; did they run as fast? A. Oh, yes, surely.

Q95. Then from the time of the construction of the "Defender," were all the machines constructed to run 500 feet or better? A. That was the specification. That is, for news.

Q96. I mean for news machines. A. Sure.

Q97. Did the Pusey & Jones Company get out any new design of shake for these news machines? A. Yes.

Q98. When was that? A. That was in 1903.

Q99. What was that machine called? A. That shake was called the "New Century."

Q100. That related to the shake of the machine? A. Yes.

Q101. Was that machine patented? A. Yes.

Q102. In whose name was the patent taken out? A. Thomas H. Savery, president of Pusey & Jones Company.

Q103. Would you recognize the drawings of the patent on that machine? A. Yes.

Q104. I call your attention to the patent to Savery, No. 742,239, a copy of which has been offered in evidence in this case as Defendant's Exhibit B, and ask you if that was the machine to which you refer? A. That is the machine.

Q105. That is the machine that was known as the "New Century"? A. "New Century."

Q106. And that was gotten out about what date? A. October 27, 1903.

Q107. What was the date of the machine in relation to the date of the patent; was it along about that date? A. I think one machine was built before the patent was issued.

Q108. And before the patent was applied for? A. No, if I recall correctly, the patent was applied for during the construction of the first machine.

Q109. But from the drawings of the machine? A. Of the machine.

Q110. And was the machine built like those drawings, following those drawings? A. Yes.

Q111. Was the "Defender" machine and the other machines of that type prior to the date of this patent—prior to 1903? A. Yes.

Q112. You can state that positively? A. Positively.

Q113. That the other machines were prior to this date? A. Yes.

Q114. Although you can't state the exact time? A. No.

Q115. Was there any means for vertical adjustment of the breast roll of this "New Century" shake machine represented in this patent? A. Yes.

Q116. What is that means? A. A screw resting on top of the vertical shake springs.

Q117. How much adjustment above the level could be obtained by the adjusting device on that machine? A. About 5 inches.

Q118. Any below level? A. It varies, according to the kind of machine. For a news machine it was set from level to 5 inches above; for a slow running machine it was set for slightly below the level to a corresponding amount above the level.

Q119. Now, when that machine was adjusted by this adjusting device, what was done to the shake rails? Did that lift

the forward end of the shake rail? A. Yes; lift the breast roll end.

Q120. Lift the breast roll end of the shake rail; and was there any provision for permitting that to be done—any provision in connection with the rear ends for permitting that to be done? A. It worked on a pin at the end nearest the suction boxes.

Q121. And is that pin shown in these drawings? A. Yes, right there (indicating).

Q122. That pin is shown in Fig. 1 slightly below the mark running from the Fig. 4? A. Yes.

Q123. Can you put the letter "A" on that pin? (The witness marks the pin "A.")

Q124. That letter "A" represents the pin on which the shake rail turned? A. Yes.

Q125. Or pivoted. And did the whole frame carrying the shake rail, table roll, etc., go up together? A. Yes, sir.

Q126. That is to say, the whole frame carrying the shake rails, the table rolls, and the breast roll pivoted on this pivot pin "A" which you have marked? A. Yes.

Q127. And was raised by the screws at the breast roll end? A. That is right.

Q128. When that breast roll was raised, what position did that give the making wire; what did that do to the making wire when you raised the breast roll end of the machine? A. It pitched it toward the guide roll.

Q129. And how far did that pitch extend? Clear to the guide roll? A. Clear to the guide roll, because we always took the highest point to which the breast roll could be raised and made a straight line from that to the guide roll and set the stationary rail on that line.

Q130. And the stationary rails were set on an incline? A. On an incline, as representing the highest elevation of the breast roll.

Q131. And is that inclined position of the stationary rail shown in this drawing of the patent? A. It is.

Q132. Were the suction boxes fastened to those stationary rails or supported under them? A. Yes.

Q133. Were they hung on the rail? A. Hung on the rail.

Q134. And what was the position of the tops of the suction boxes? A. On a line with the wire.

Q135. Did they have this same incline as the stationary rail? A. Sure.

Q136. Do you know whether any machines having this "New Century" shake were sold? A. Yes.

Q137. What speed did those machines attain, any of the machines that you knew about personally? A. Pretty close to 600 feet.

Q138. Was that the recognized speed of all the machines of that type? A. That was what we aimed at.

Q139. Is that what you claimed for them? A. That is what we claimed for them.

Q140. Mr. Davis, do you recall any places where any of those "New Century" machines, as you call them, were sold in this country? A. Yes, I can name several of them.

Q141. Will you do so? A. Well, the Minnesota & Ontario has four; Finch, Pruyn & Company, three; Crocker-Burbank, two. Oh, I could give you a long list as necessary.

Q142. Do you know how fast any of those machines were operated that were not elevated on blocks? The Minnesota & Ontario, I understand, were elevated on blocks so as to give a greater pitch to the wire. Do you know where any machines were operated where the standards of the machine were on a level base? A. I think the St. Croix machines were erected as we originally built them, and those machines run at 575 feet, as I saw them; may have run faster than that, but I saw them running at 575.

Q143. And that was with only the adjustment that is provided on the machines? A. Originally, yes.

Q144. Without any blocking up? A. Yes. I think the blocking up was done afterwards.

Q145. What would be a fair statement as to the speed attained by the Pusey & Jones machine, news machines, beginning with the "Defender" machine? A. Fair speed?

Q146. A fair statement of their speed. What would be a fair statement of the speed attained by those machines? A. I should think 550 to 575.

Q147. Do you know of any Pusey & Jones machine constructed subsequent to the so-called "Defender" machine that ran at less than 500 feet? I mean, of course, newsprint machine. A. No.

Q148. What was the speed at which you stated the "Defender" machine" was running when you saw it? A. 504.

Q149. Did you sell any of the Pusey & Jones machines in England? A. Yes.

Q150. To what company were those machines sold? A. Edward Lloyd, Ltd., Sittingbourne.

Q151. When were those machines sold? A. 1907.

Q152. Do you know whether, when they were put in originally, they had any blocking under the standards or sills? A.

No, they had not.

Q153. They were put in as built, as shown in the patent? A. Yes.

X154. Have you knowledge as to whether those were the machines that were involved in the suit of Eibel Company against Lloyd in the English court? A. Not the two I sold; they were two previous machines; two 86-inch machines.

Q155. Not the two machines sold by you? A. Not the two machines sold by me.

Q156. Those were Pusey & Jones machines? A. The 86-inch were.

Q157. Were they the same type of machine? A. Same type of machine.

Q158. This "New Century" shake? A. Yes.

(Letter, dated November 24, 1911, from J. H. Horne & Sons Company to George C. Bayless, marked "Defendant's Exhibit V-16.")

Q159. This Exhibit V-15 has "Order A-5994" on it in pencil. Is that the shop order number? A. That is the shop order for the repairs for the 136-inch Bayless machine.

Q160. And is that the identical paper that went to the shop? A. The identical paper.

Q161. And were all these interlineations made by you? A. By me.

Q162. Before it went into the shop? A. Before it went into the shop.

Q163. When the Messrs. Horne were on the stand in this case last Friday and Saturday it appeared the specifications for these original Fourdrinier machines for the Bayless company, dated January 18, 1901, were produced, and there was a reference in some correspondence to a signed contract. Have you got that contract? A. I have.

Q164. Have you it here? A. I have (producing contract). I don't know whether you want it or not.

Q165. This is the signed contract for the Bayless machines —114-inch and 136-inch? A. Yes.

Q166. Dated February 16, 1901? A. That is it.

Q167. Will you point out the statements in this contract as to the adjustable part of the Fourdrinier (handing contract to witness). A. It is on page 2, under the item "Breast-roll," and reads as follows:

> "Breast-roll frame of heavy cast iron 'U' shape, carrying the breast-roll brackets, and also the top and bottom shake rails—our patent frame or truss—arranged to raise or lower the Fourdrinier table from the front side of the

machine while machine is running, with one operation by means of a worm screw similar to the Moore & White and Black & Clawson arrangement. The top shake rails also the bottom rails, our patent wire roll supporting frame, to roll on gear segments at points just over sill plates, giving a perfectly horizontal motion to the wire without any twist on the rails or any up and down movement of the breast-roll."

Q168. Is there anything else relating to that adjustment in this contract so far as you have discovered? A. I think not.

(Said contract is marked "Defendant's Exhibit V-17.")

The Witness: Here is also a letter (producing a paper). I don't know whether you want that or not; but that is Bayless' letter.

Q169. That came with the contract? A. That came with the contract. It is in the nature of a formal order for the machines.

Q170. This letter that you referred to submitting the contract was dated February 16, 1901? A. That is the one.

(Adjourned.)

Room 607, Old South Building, Boston, January 1, 1918.

Met pursuant to adjournment, present as before.

ABIRAM F. SMITH,

a witness called on behalf of the defendant, being first duly sworn, deposes and says, in answer to questions by Mr. Paul, as follows:

Q1. What is your name? A. Abiram F. Smith.

Q2. And where do you live? A. At Middletown, Ohio.

Q3. What is your age? A. Forty-five.

Q4. What is your business? A. Paper making.

Q5. With what company are you connected? A. With the Paul A. Sorg and W. B. Oglesby Paper Company, and the Carso Paper Company.

Q6. What is your position with these companies, at present? A. Vice-president of the W. B. Oglesby Paper Company, and general superintendent of the Paul A. Sorg, Oglesby and Carso Companies.

Q7. Have you had practical experience as a paper maker? A. For over thirty years.

Q8. When and where did you first begin to work in paper making? A. In 1886. About 1887, I guess, in Ypsilanti, Michigan.

Q9. What did you first do in a paper mill? A. Roll boy or

helper.

Q10. How long were you working at the mill there in Michigan? A. Well, about a year and a half.

Q11. Then where did you go? A. To the Cleveland Paper Company, Cleveland, Ohio.

Q12. How long were you there? A. About six months.

Q13. And then where did you go? A. The Bardeen Paper Company, Otsego, Michigan.

Q14. And how long were you with the Bardeen Paper Company? A. Probably—I don't recall those exact figures; about nine months, if I remember, something like that.

Q15. Then what mill were you working in? A. After that?

Q16. Yes. A. The Mead Paper Company, of Dayton, Ohio.

Q17. How long were you there? A. About three years.

Q18. And then from there, where did you go? A. I went to the—I can't remember the name for a minute. It was at Rochester—the Gennessee at Rochester, New York.

Q19. And how long were you there? A. About three months.

Q20. And from there, where did you go? A. To the Crocker, Burbank Company, at Fitchburg, Massachusetts.

Q21. How long were you there? A. I think about another nine months, possibly, or something like that.

Q22. And what other mills have you worked in since this one at Fitchburg? You might mention the principal places where you have worked. A. The Hollingsworth & Vose Company, at East Walpole.

Q23. In Massachusetts? A. Massachusetts. And the Aetna Paper Company, of Dayton, Ohio, the Tileston & Hollingsworth Company, at Mattapan, Mass., the Eureka Paper Company at Fulton, New York, and the Paul A. Sorg Paper Company, Middletown.

Q24. How long have you been with that Sorg Company? A. Fifteen years.

Q25. How long were you with Hollingsworth & Vose, at East Walpole? A. About three years.

Q26. (By Mr. Lyman): Fifteen years with Sorg? A. Yes.

Q27. (By Mr. Paul): And how long with the other companies that you have mentioned, between the Hollingsworth & Vose and Sorg? A. I was practically five years with the Tileston & Hollingsworth Company.

Q28. And short terms with the others? A. Yes, but I remember I was about fifteen months with the Eureka Paper Company.

Q29. Now what have been the different kinds of work that

you have done in the paper mills, without going into them in detail; what positions have you had, and— A. I have had all the positions in the paper mill, from roll boy or helper, to superintendent, general superintendent.

Q30. You are familiar with the practical operation of paper machines? A. Yes, sir.

Q31. Both the cylinder and Fourdrinier machines? A. Yes, sir.

Q32. What was the first mill that you worked in, where they had Fourdrinier machines? A. Oh, the Cornell Paper Company, Ypsilanti.

Q33. You didn't mention that place, did you? A. Yes, that is where I was born, and where I first started.

Q34. What kind of paper was made by the companies of which you are now superintendent? A. We manufacture specialties, in the Sorg Paper Company, and bonds, ledgers, cards, offsets and so forth at the Oglesby Paper Company; special light weight tissue papers, at the Carso Paper Company.

Q35. What kind of machines did you use, the Fourdrinier, cylinder, or both? A. We had seven machines, cylinders and Fourdriniers, seven paper machines, consisting of Fourdriniers and cylinders.

Q36. How many of them are Fourdriniers? A. Three.

Q37. And where were those located? A. In the Oglesby and Sorg divisions.

Q38. How many, at the Sorg plant? A. One Fourdrinier.

Q39. What is the make of that machine? A. J. H. Horne & Sons Company.

Q40. Have you had a special experience along the line of making heavy papers? A. I have.

Q41. Has that been the principal part of your work, manufacturing heavy papers? A. Oh, no, I have manufactured everything, from 24x36, 8 pound paper, up to the heaviest card paper, 24x36, 400 pound.

Q42. In the operation of Fourdrinier machines what has been your practice in reference to the running of the wires; whether it has been level, or below level, or above level?

Mr. Lyman: Question objected to as not based on anything in the answer.

(Last question read.)

A. I have run them both above and below level.

Q43. Also run them level? A. Also run them level.

Q44. When you were working at the Hollingsworth & Vose Company, were there any Fourdriniers in the plant? A. There were.

Q45. How many? A. One.

Q46. What was the character of the paper that was made at that mill? A. That was rope papers, mostly, in various weights, from the very heaviest to as light as 20 pound paper, 24x36.

Q47. Any of them used for newspaper? A. No.

Q48. What was the first plant at which you worked where the news-print papers were made? A. At the Hanna, at Crocker, Burbank's, at Fitchburg.

Q49. And what has been your practice as to having any relation in the operation of Fourdrinier machines, between the pitch of the wire and the speed at which you were running the machine?

Mr. Lyman: Objected to, as not based on anything in the answer.

Q50. You may answer.

(Question read by stenographer.)

A. The pitch of the wire was determined by the speed at which the machine was running.

Q51. Please explain your practice in running machines with the wire below the level; state with what kinds of paper you run below the level, and what the limit is to which you have been in the practice of depressing the breast roll end of the machine? A. The character of the paper did not determine the pitch at which the wire was run; but the speed at which the machine was run determined the pitch. What was the balance of that question?

(Last question read to witness.)

A. (Continued.) Four inches below the level is the most that I have run them.

Q52. And will you please state what advantage you find from running the machine with the breast roll end depressed, so as to give you an up-slant or pitch from the breast roll to the suction boxes? A. In order to kill the effect of the head, that is the smallest head that it is possible to run, the machine is running below 100 feet per minute, causing the stuff to run faster than the travel to the wire, with any head that is practical, without the effect of the head is offset by the pitching of the wire.

Q53. Now will you explain why that is, will you make that a little more specific? A. Because in running slow, if a wire is level, any head that can be held back of the slice, will be too much for a speed of a wire below 100 feet per minute. This must be counteracted—as it is necessary to hold a head or pool to start from, in order to counteract the effect of this

head, and the velocity with which it would flow out, it is necessary to counteract it by means of pitching the wire up-hill.

Q54. And how does that do it, how does that counteract it? A. With a head as small as one inch, without an up-hill pitch to counteract the velocity with which it flows out, the tendency on slow speeds is to curl up, push the fibres up in bunches, and not form an even sheet.

Q55. With what kind of paper do you want to run slow? A. As a general proposition, heavy weight papers are run slow; but this isn't always the case. Papers that are well beaten and made from what is known as slow working stock, in which the water does not leave them freely, the machine runs slower than on papers made from stuff that is more free.

Q56. Now do you mean that heavy papers are not always run slow? A. No. The heavier the paper is, as a general proposition, the more slow it is run; but you might run a heavy piece of paper twice as fast if it was made out of freer stock, than you would some made out of slower stock.

Q57. Then do I understand that the character of the stock largely determines the speed at which you run? A. To some extent; but the speed at which you run is mostly determined by the weight of the paper.

Q58. Now will you explain the difference between what you call a slow stock and what you speak of as a free stock, and how they are formed, that is, what it is in the process that makes the difference between a slow stock and a free stock. A. Stock which has been well beaten, or in other words, well hydrated, each fibre becomes more flexible, the more it is hydrated, and as the fibres become more flexible, they intertwine and knit together closer, and thereby preventing the water from draining away from them rapidly. Fibres that are not so well beaten, partake more of the nature of the sliver, or a stiff stick, and do not intertwine closely, and therefore, the water drains through them more freely.

Q59. Which kind of stock is more generally used for the heavy papers, the slow stock or the free stock? A. That is all determined by the character of the sheet you want to make. On heavy weight papers, such as blotting paper, the stuff is beaten free; but on heavy weight papers, such as Taylor's pattern board, the stuff is beaten slow.

Q60. What has been the practice in Fourdrinier machines with which you have been familiar, in regard to the slices; how many slices have ordinarily been employed, and how are they located in reference to the breast roll? A. Generally, up to the last fifteen or twenty years, in my experience, two slices are

used, almost universally, one of them located about an inch from the—well, you ask from the breast roll. The first one, located approximately 18 to 24 inches from the center of the breast roll, and the second one about 6 inches further ahead than the first one.

Q61. That would carry a pond of water over the wire? A. Yes. They were used for backing up or producing a pond of water to start a paper making operation from.

Q62. And was the wire covered back of the slices, and if so, to what extent? A. The wire was generally covered back of the slices, by means of what is known as an apron, which came up approximately within one inch of the first slice.

Q63. Now is there, in your practice, any variation in distance that this apron would come to the slice? A. I have run them at various distances, from four inches back to underneath the slice, in which no portion of the wire back of the slice is exposed.

Q64. As I understand you, when the end of the apron does not come to the slice, there is a part of the wire between the end of the apron and the slice, that is not covered by the apron, and is left exposed; is that right? A. Yes.

Q65. And you have varied the arrangement of the apron, so that this exposed part of the wire has been varied, and when you run the apron under the slice itself, then the wire would be all covered, back of the slice? A. Back of the first slice.

Q66. Has it been the practice to have the wire all exposed between the slices, or has that sometimes been covered? A. As far as covering the wire by means of the apron between the two slices, I have never known this to be done; but the same effect has been produced by placing underneath the wire a board or glass or brass plate, to prevent the stock from passing through the wire at the point where it was covered, where the board, or whatever is used, touched the wire.

Q67. What is the effect of having the apron stop short of the first slice, on the formation of the sheet? A. You start to lose water, and if water is lost, each day passing through leaves behind the fibres that were suspended in it. Consequently, you start to form your sheet of paper right at the edge of the apron.

Q68. It would really then, begin to form the sheet of paper before—or back of the first slice? A. Yes.

Q69. And if the apron comes out to the slice, then it begins to form on the slice, or just in front of it? A. Wherever the apron ends.

Q70. The sheet begins to form wherever the apron ends, where water can go through the wire? A. Yes.

Q71. Now, if the stock comes out from under the slice faster than the wire is traveling, what is the effect on the fibres that have been deposited on the wire? A. It tends to displace them. I might qualify that by saying either drags them backwards unevenly, or pushes them forward, rolling them up in bunches.

Q72. This question assumed that the water was coming faster than the wire? A. As to whether the water is traveling slower or faster than the wire is running, as these fibres are fastened to the wire, they will only be disturbed by force.

Q73. Well, then, if the stock is coming on to the wire faster than the wire is running, it tends to roll them up? A. Tends to roll them up.

Q74. And if it is coming on slower, what is the effect? A. It tends to comb them up and roll them backwards into lumps.

Q75. Now with this explanation that you have given of the arrangement of the slices, will you explain again the advantage that you get from dropping the breast roll end of the wire so as to have it lower at the breast roll than it is towards the suction boxes, from an up-hill pitch? A. It is done in order to counteract the effect of a head which, in very slow speeds, that is, speeds below 100 feet a minute, is necessary to do, in order to prevent any practical head that can be handled on a level wire, by means of slices, from flowing out faster than the wire is running.

Q76. How is it that this pitching of the wire up-hill tends to overcome this tendency of the stock to roll up the fibres and displace them? A. In my opinion, this is caused in exact opposite effect of a stream flowing down-hill, in which the effect of the head is measured, not only from the depth of the pool, but from the top of the pool to a point down the stream, to some place where the current is still in motion. The exact opposite of this would be the fact, that with a one-inch pool or head, by means of an up-hill pitch, you would counteract the effect of the head, as far as its flowing with velocity is concerned, and it would only flow out as drawn out by the speed of the water.

Q77. How low have you ever—what is the lowest speed at which you have ever run a Fourdrinier machine? A. 7 feet and 10 inches.

Q78. Speed per minute? A. Per minute.

Q79. What is the lowest speed at which you, at the present time, run a Fourdrinier machine, in your present practice? A. At the Sorg Paper Company, we have never had occasion to run lower than 25 feet, in my memory.

Q80. Well, when you run 25 feet—that is 25 feet per min-

ute? A. Yes.

Q81. When you run 25 feet per minute, how much do you depress the breast roll end of your wire? A. 3—about 3 inches.

Q82. And you say you have operated machines with the breast roll end depressed 4 inches? A. I have.

Q83. Now as you begin to run that machine faster—take for instance your practice at the Sorg Company plant—as you begin to increase from the 25 feet per minute, what do you do in reference to your wire? A. We begin to raise the pitch to a point nearer level.

Q84. When do you run it level; about what speed? A. Well, around 180 feet, I think about 180 feet, we generally have it about level.

Q85. Well, as you increase from 180 feet, you run faster than that? A. We do.

Q86. What do you do? A. We continue to raise the wire as the speed increases.

Q87. Well, in your present practice with the Sorg Company, how do you have it? A. We have it above level, three inches or a little more, at a speed from 375 to 400 feet.

Q88. That is as fast as you run it? A. That is as fast as we run it.

Q89. Then as I understand you, you have your slowest speed—when you are running your slowest speed, you have your wire down below level, at the extreme that you use? A. We do.

Q90. And at your highest speed it is above level, to the extreme that you use? A. It is.

Q91. In between you vary the pitch, going up from the lowest point towards the highest point? A. We do.

Q92. When, and in what way was your attention first called, do you remember, to the fact that when the speed was increased the wire should be given a less upward pitch, or some downward pitch? A. When, you say? That was about 1891 or 1892, at the Hanna Mill, in Fitchburg, we increased the speed of the machines some 10 or 20 feet per minute, and having been in the mill—and the next Sunday, being in the mill, I noticed the millwright changing the level of the table rolls, or pitch. I tried to find out as to why this was being done, and the millwright said that he had orders to change it, but did not know for what reason. The next day I inquired from the machine tender, Mr. Peter Mondor, as to why they had changed the level of the wire, and he explained to me that inasmuch as they had increased the speed of the machine, the water did not follow up as readily as before, and they were trying to give it a little

less pitch, in order that the water might follow more rapidly with the wire.

Q93. That was, less up-pitch? A. Yes.

Q94. To bring it more nearly level? A. Yes.

Q95. Was it at that time raised above level? A. No, I think not. It was merely a matter of taking off some of the pitch.

Q96. Some of the up-pitch? A. Yes, some of the up-pitch.

Q97. What make of machine was that, do you recall? A. That was made by the Union Machine Company, of Fitchburg, Mass.

Q98. What was the kind of paper that was being made? A. We were making the New York Herald, a newsprint paper.

Q99. What was the stock being used; what was it made of? A. Ground wood and sulphite.

Q100. And what was the speed at which that machine was being run, then? A. Between 240 and 260 feet.

Q101. Do you remember how much it was below that, before this change was made? A. Approximately three-quarters of an inch.

Q102. Was that before the change was made? A. Before the change was made.

Q103. And how much was it moved up? A. I think they were trying to raise it up about one-half. I think they were trying to take off about one-half of the pitch that they had.

Q104. When did you first know of the wire of the Fourdrinier machine being pitched down-hill? A. I had heard it talked of, but had never seen any machine pitched down-hill, but at the Bardeen Paper Company, when I ran a machine there, seeing the necessity of having it pitched down-hill, I changed the pitch, so that we had a down-hill pitch.

Q105. How much? A. About half an inch.

Q106. What was the effect of that half inch pitch? A. I don't know how to put that answer in. The effect was all right when I was running the machine. When the other fellow was running the machine, he didn't have the theory of it, and there was trouble about it. I don't know whether you want that in, but that is what it was, all right.

Q107. How did that affect it when you were running the machine? A. I was able to run—form a better sheet of paper at the same speeds that we had been running.

Q108. And why was that? A. At this mill we had stock that was rather slow working, consisting of old paper, and we could not use much water. In other words, we could not get enough water back of the slices to get head enough to cause it to

follow up the wire as rapidly as the wire was running, especially when it was below level, and in order to assist this stock to flow out as rapidly as the water was running at a very low head, which was necessitated by the small amount of water that we could obtain, it was advisable to have the pitch down-hill, to assist us with what head we could obtain with the small amount of water that we could have, on these slow working machines.

Q109. How much did you elevate that wire? A. It varies slightly. I think I had in there half an inch. I remember that the machine was so constructed that it was almost impossible to get any above level, but I did manage to get it somewhat above level, about a half an inch.

Q110. How did you do that; what did you do? A. By raising the side rails, that carried the table rolls, by means of the adjusting screws; and furthermore, by using the adjusting screws under each table roll.

Q111. Now this was at the Bardeen? A. At the Bardeen Company.

Q112. The Bardeen Company. Now was that before or after you saw this pitch changed, the level of the wire changed, on this machine at Fitchburg? A. It was after. I worked at the Bardeen Paper Company twice. The first time I was back tending, and this time, I run a machine there.

Q113. In stating where you had worked, I don't think you mentioned the second employment at the Bardeen Company. A. I did not.

Q114. You worked there early? A. Yes, sir.

Q115. And then some later? A. Afterwards.

Q116. And from what place did you go to the Bardeen Company, the second time? A. From the Aetna, of Dayton, Ohio.

Q117. Why is it that with what you call a slow stock, you want to run the wires slowly? A. In order to get rid of the water, draining out, and not carry down more than can be handled by the suction boxes and couches.

Q118. Is there any particular difference in the speed at which the water drains out when the wire is running up-hill, and when it is running at a level? A. I do not think there is.

Q119. I mean by that, as to the speed at which the water will go through the wire? A. As to whether it is up or down-hill?

Q120. Yes. A. I do not think there is.

Q121. What was your next experience— A. Before we get off of that question—

Q122. If you want to add anything— A. I can talk along for quite a while on it. I don't know whether you want me to,

or not.

Q123. I want you to answer the question, if you have answered it. A. I don't think that—I will qualify that by saying that without the proper amount of pitch for the sheets that you are making, a condition may arise in which the water will drain through less or more rapidly. Now that may not come in there.

Q124. Will you explain a little what you mean by that? A. In running slow and with the wire not pitched up-hill enough, in order to hold a head, it will be necessary to run the slices down lower than as though the wire was properly pitched. The consequence is that you fill the wire full of stock right at the entrance point of the slices, and if it is filled full here, the water cannot drain out properly beyond, on the wire, so the more that is lost in one place the less can be lost in some other place further down the wire.

Q125. What was your next experience with running a wire down-hill, pitched down-hill, after the Bardeen Mill? A. At the Sorg Paper Company.

Q126. And I think you said you went there about fifteen years ago? A. Yes.

Q127. What were the machines that you had there at that time, or the machine or machines? A. We had a Fourdrinier machine built by the Black & Clawson Company; also a cylinder machine, built by the Black & Clawson Company.

Q128. How much elevation could you give the wire in this Fourdrinier, Black & Clawson Fourdrinier machine? A. We got it up to slightly above level, say one-half inch.

Q129. How soon was that done after you went there? A. As soon as possible. I saw that it was necessary to elevate it, as soon as I looked at the sheets that they were making, and then the next week or two, we raised the pitch.

Q130. What speed did you run it, after you raised the pitch? A. Well, we ran about 250 feet.

Q131. And what head did you use? A. Two inches or three inches.

Q132. How many slices? A. One slice.

Q133. And did the apron come to the slice, or was part of the wire exposed, back of the head? A. The apron did not come to the slice. It was about one-inch from the slice.

Q134. Now when did you get the Horne machine? A. We purchased the Horne machine that we have now, you mean?

Q135. Yes. A. In 1909.

Q136. What is the means for changing the elevation of the breast-roll on the machine? A. By means of worm and

gear at the top of the vertical posts. In said posts are wire cables, from which the Fourdrinier part is suspended, like a pendant.

Q137. About how much movement can be given to the Fourdrinier, by means of this adjusting device? A. From 3 inches below to 3 inches above a level.

Q138. Is that the limit of the movement? A. Not quite, but it is all that we are using, in practice.

Q139. Do you know about how much more could be obtained, with that device? A. Probably from half inch to a possible inch further, in each direction.

Q140. Your practice is to elevate it three inches above, and to come down to 3 inches below? A. For our extremes of speed.

Q141. Yes, and at what speed do you use the lowest position, 3 inches below? A. On the slowest speed.

Q142. And what is the slowest speed at which you run? A. Between 25 and 30 feet.

Q143. And the highest, I think you said was— A. We had run as high as 400 feet; we run from 350 to 400.

Q144. Now, does the gearing that you have give you that variation, without any change? A. Well, the machine is driven by a variable speed electric motor, which has a variation of some 4 to 1, and in order to get the extreme variation that we use in this machine, we change the pulleys on this motor.

Q145. Then you can go— A. You can go most anything you want; but what we have done is from 25 feet up to 100.

Q146. What kind of paper do you make on this machine, at these extremes; what do you make as the lowest speed? A. The lightest paper that we have made on these machines is 24 by 36, 15 pound, and the heaviest paper that I can recall this moment is about 200 pounds, 24 by 36.

Q147. What is that lightest paper used for? A. The lightest paper that we ever made, the 15 pound, we never knew what it was used for. An order was sent in, and nothing said as to what it was used for. The majority of our light weight paper is at 18 pounds, and 24 by 36, and used for waxing. In other words, these papers are waxed, and used for wrapping candies, and so forth.

Q148. Is some of it used by the National Biscuit Company? A. Not at the present time. We do not make anything for the National Biscuit Company at the present time.

Q149. And at what speed do you run this lightest paper? A. Well, that is a little bit—I will say we run our very lightest paper, the 15 pound and 18 pound paper, would be run at a speed of about 300 feet.

Q150. And about what weight paper do you run at your highest speed, which you say is between three and four hundred? A. The 18 pound, when every condition of wire and clothing and so forth, is best, and the 20, 22 and 24 paper, when the machine is such as to run safely.

Q151. Is there anything about your power or your operating plant that limits you to 400 feet speed? A. We have not enough power in our generator which drives the motor on this machine, to give us more speed than we are using at present.

Q152. How much head do you use back of the slice? A. We use about 3-inch head.

Q153. That is, at your highest speed? A. Yes, sir.

Q154. Do you use more than one slice? A. Never use more than one slice on fast running; that is, at speeds of 200 feet—two to four hundred feet, rather.

Q155. What head do you use at the slow speed, the slowest speed? A. The very smallest head that it is possible to run. The smaller, the better.

Q156. And how small can you get? A. We try to have no head whatever to hold back by the slice. We lower the pitch down in order to hold a pool back, and simply use the slice to keep the foam from running forward, and to level the sheet to a slight extent.

Q157. I wish you would glance at this tracing, which is marked "Defendant's Exhibit V-5," and state whether that represents generally the arrangement of this Horne machine that you have. A. Very close to it.

Q158. Particularly so far as the posts at the breast roll end and the adjusting device? A. Very similar.

(Direct examination closed.)

CROSS EXAMINATION.

By Mr. Lyman:

XQ159. You speak about the practice of running your wire below, so as to form a pool. That results, does it, in killing, as you say, all the speed with which the stock enters the wire, and leaving a stationary pool? A. It counteracts the effect of the head, as at the point where the wire takes the sheet from the pool, there is practically no head.

XQ160. Well, now, what evil is it that that cures? A. It cures the—prevents the head from running faster or flowing out faster than the wire runs.

XQ161. Is it just as great an evil to have the stock flow out slower than the wire runs, as it is to have the stock flow out faster than the wire runs? A. I think it is.

XQ162. Now what trouble is caused when the stock flows

out faster than the wire is running, or slower than the wire is running? A. It pulls apart and distorts—it pulls apart and distorts and prevents the formation of the sheet of paper in the proper manner.

XQ163. And in your view, must the speed of the stock be exactly identical with the speed of the wire? A. Well, within reasonable limits.

XQ164. What reasonable limits? A. I would say, for a perfect sheet of paper, the more nearly it flowed with the exact speed of the wire, the more perfect sheet of paper would be made.

XQ165. If you were running with a speed of 50 feet a minute, what position would you want to have your wire in? A. Below the level.

XQ166. How much below level? A. It would be determined by a practical man, by looking at it and seeing—and continuing to lower it until such time as you could prevent the stock from running faster than the wire is running, which can be easily seen, when looking over on the wire.

XQ167. How can you tell by looking over on the wire? A. By the—you can see whether or not the water is pushed—is moving at a speed faster than the wire is, by the way it looks.

XQ168. Tell me how it looks. A. It keeps—you can see from the top part of the water, and notice that this water is moving faster than the stock that you notice through the surface water, and which is fastened to the wire.

XQ169. You can look through the stock, can you? It is transparent? A. On certain papers, yes.

XQ170. What papers? A. Sulphite sheets; in fact, most any sheet, a man of experience can tell whether or not the current is running faster or slower than the wire is traveling.

XQ171. That is the only way you can tell, is it, by looking through the sheet and comparing the speed of the wire underneath, with the speed of the water on the surface? A. That is the most practical way.

XQ172. The only way? A. You can figure it—it can be figured very closely, by means of the law of falling bodies.

XQ173. I was asking for a method; whether there was any other method of observing it by the eye? A. I don't think that there is—I don't want to answer it that way. I want to state that over again, that we tell this by looking at it on the wire, and it can easily be told by anyone, with experience.

XQ174. Well, please give me the benefit of your experience, and tell me how I can determine it by looking. A. The benefit of my experience would be that if I had you with me I could

point it out to you, and you could easily see it.

XQ175. What should I look for? A. Oftentimes when the seam of the wire comes around, it can be noticed, and at such times, it can—when the current of upper forming water is not traveling as fast as the wire, you can distinctly see the seam move, much more rapidly than the water above it; furthermore, the fibres that are on the wire can be seen through the surface water, and can be noticed to move faster or slower than the surface water.

XQ176. Well, now, to come back to the question I asked you, what position below the level would you want to put your breast-roll, if you were running at 50 feet per minute? A. There is no hard and fixed rule as to the exact position of the breast roll at 50 feet per minute, as it is possible to form a very good sheet of paper if the wire is somewhat more or less at any certain—more or less than any particular fixed amount; but on general principles, I would say that a machine running 50 feet per minute would need a wire down from 1 to 2 inches.

XQ177. And what head would you use on such a machine? A. On slow speeds the smaller the head, on heavy paper—

XQ178. No— A. On slow speeds such as you mentioned, in which you would be making a heavy sheet of paper, the less head, the better.

XQ179. Well, just how much head would you say? A. As little as possible, and leave the sheet, and prevent the froth from carrying forward.

XQ180. Can you answer my question in terms of inches? A. Very difficult to answer it.

XQ181. The fraction of an inch? A. What did you say?

XQ182. Would it be a fraction of an inch, or more than an inch? A. I would say that this—that it would be—let me have your question over again, so I will get it just right.

XQ183. What head would you carry on a machine that was running at 50 feet per minute? A. Well, my answer is, that we would carry that—

XQ184. As little as you could? A. Just as little as you could, and you want to know the amount?

XQ185. Yes. A. And I come back and say, as little as I can, which is determined by the amount of pitch that you have, and the nature of the stock, and so forth; but the more you have, the more trouble—the more head you have, the more trouble there is, in preventing it from moving forward faster than the wires travel.

XQ186. Can't you tell me whether you ought to use, in that case, with a 50-foot wire and a pitch up-hill of 1 to 2 inches,

a head of more or less than 1 inch? A. I cannot.

XQ187. Now the effect of your up-hill pitch, that you would give there, would be to cause a stationary pool, would it, at the beginning of the wire? A. I wouldn't say a stationary pool, because that pool must be moving forward; it must, and feed on to the wire; but you—by having the wire run up-hill, you prevent this head from moving faster than the wire, which cannot be done by means of a level wire and slices.

XQ188. That pool is practically stationary, isn't it? A. Why, I—do these questions have to go down, right down just as I can talk them off?

Mr. Paul: Yes, everything you say goes down there.

The Witness: All right. You say this pool is practically stationary?

XQ189. Yes. A. I cannot say that the pool, as I get the sense of the question, as the pool is stationary, because if the wire is moving forward at a certain speed, the pool must be feeding forward. In other words, from the back part of the pool to the forward part of the pool, there must be some movement.

XQ190. A very slow movement? A. A very slow movement.

XQ191. Nothing like as fast as the movement of the wire itself? A. I would say not as fast as the movement of the wire, because if you have a pool that is an inch deep and a wire—and a sheet is coming off at the edge of the apron, or underneath the slice, one-half inch, your pool would be moved at approximately half speed that is in the pool of itself, not right at the entrance—not right at the point of the slice, but back in this pool.

XQ192. Why do you say it would be moving at about half the speed? A. Because, to convey away the same amount of water in a half-inch thick as in an inch thick, why, your half-inch speed must be just twice as fast; we will say if you had a 4-inch pipe and the water moved through it or past it, if you decreased that pipe, why, it would have to move faster, to take it away.

XQ193. Well, you say that the head ought to be made just as little as possible, so as to give practically no initial velocity of the stock on the wire, do you? A. Not for that reason, entirely.

XQ194. Well, the result of giving no head at all, would be practically to kill all initial velocity of the stock on the wire, wouldn't it? A. Very nearly so.

XQ195. And the velocity of the pool itself would be one-half of even that small speed, if the pool were one inch thick? A.

Yes.

XQ196. Now, isn't the result going to be that your stock in that case will be practically stationary, and your wire will be going much faster than the stock? A. That would be regulated by the slice, and a very slight difference in the slice will give you just the exact amount of head, in order to flow out even with the speed of the wire.

XQ197. Do you mean to tell us that when you have the wire running up-hill and a pool formed there that is practically standing still, that nevertheless, that pool is moving at a speed practically equal to the speed of the wire, when it is running 50 feet a minute? A. Now let us get this question again.

(Last question read by the stenographer.)

A. There is some question. It runs into some words there.

(Question again read.)

A. (Continued.) I don't get the sense of that question. I don't get the sense of that question. The point I am trying to convey, or trying to answer for you, is the speed with which the water is delivered to the wire, right at the slice, right under the slice, and with the wire running uphill, you can prevent, on slow speed, the water in this pool from running faster than the wire runs, very much easier than you can with the wire level. In fact, you cannot prevent, with a level wire on very slow speed, the water from running faster than the wire does, in practical operation. With the wire running up-hill, and then a very slight adjustment of the slices, it is possible to cause it to flow out at a speed exactly the same as the wire is running, as far as the eye can see, and which will always form a very nice sheet of paper. Now, that may not be at all what you want there.

XQ198. What I can't see is this: Take a case where you have a wire running three inches up-hill, a pool of water at the breast roll end three inches deep; that pool will be, as far as the eye can see, stationary, wouldn't it? A. No, because it will be moving forward. There will be some movement in it. If it didn't, the wire would simply run away from it. There must be some coming in and some going out. That wire must have some movement in it.

XQ199. Well, it would be an extremely slow movement? A. Extremely slow movement. I will say—

XQ200. Far slower than the movement of the wire in the point of it where there was some depth? A. Yes, at the back end would be very much slower than the forward end of it, if it was like that, and there was a pool—it was like that, and you had your head there of a certain depth here, and less here, and

I am feeding this wire forward, this would be less here than it would be up here; as it got thinner, it must move faster.

XQ201. Well, then, why aren't you running your wire, in that case, at a good deal faster rate of speed than your stock is moving, and why don't you get that rolling up effect that you were telling about, in that case? A. Why—please read the question.

(Last question read.)

A. (Continued.) Because the very smallest—because the fact that the very lowest heads will have speeds that are more than what we are talking about now, in reference to slow speeds of the wire. In other words, the head, figured from the theoretical law—figured from the theory of the law of falling bodies, a head as low as one-half inch, will have a velocity of approximately 96 feet per minute.

XQ202. Is it your theory that the reason why it does damage to have the stock enter upon the wire at a slower speed or a faster speed than the wire has, is that when that happens the fibres that have been deposited just back of the slice are rolled up or curled up? A. They will be disturbed.

XQ203. Is that the reason? A. That is the reason.

XQ204. And that reason doesn't exist in a case where your apron goes right up to the slice? A. There would be no fibres deposited back of the slice. They would all be deposited forward of the slice, and still, at the same time, it would be necessary to have the speed in relation to the speed of the wire—the speed with which the stuff is delivered under the slice, must been in proportion to the speed of the wire, either with the apron back or not.

XQ205. What has the matter of the fast or slow stock to do with the matter of the adjustment of the wire, whether it runs either down or up-hill? A. I would say nothing whatever, provided that in running it up-hill or down-hill you do not produce some effect which causes it to drain it more or less rapidly.

XQ206. What do you say was the speed upon the machine at the Hanna mill, in Fitchburg? A. Around 250 feet. I have understood from 240 to about 260.

XQ207. And what was the speed used on that machine? A. The ordinary head that was used in those days, of about 3 inches.

XQ208. You said that you adjusted the table rolls there. Did that result in giving the wire an elevation back as far as the breast roll? I mean, a pitch as far back as the breast roll? A. Yes.

XQ209. Did you raise the breast roll, too? A. In the old days we often had wires that ran up-hill slightly, from the breast roll to the first table roll, and then the pitch in level—pitch in level, we might put it, was taken from the first to the last table roll.

XQ210. Was that the case in the Fitchburg roll? A. I don't remember just exactly how the breast roll was at the Hanna mill, but I think the breast roll was probably a little lower than the first table.

XQ211. The adjustment of the table roll was provided merely so as to enable them to be lined up accurately, was it not? A. No, the lining of them up accurately was by means of an individual screw under each table roll, but in all the old machines there was also brackets that carried the table—the side bars, in which it was possible to have an adjustment of a few inches—possible to have an adjustment of the entire table, of a few inches, and that, for an accurate adjustment of each table roll, was done by means of a separate screw.

XQ212. I understood you to say that at one time you gave the machine at the Bardeen Paper Company a slight down-hill pitch of one-half inch, and although it worked all right with you, your successor didn't like it? A. Well, I didn't exactly say so. I didn't mean to say that my successor didn't like it, but what I wanted to express there was that I talked this to the superintendent, and he wouldn't have it, and I wanted it, and I went in on Sunday night, put it up myself, and when I started up—it is more difficult to build up a head when you have got a little down-hill pitch; in starting it up after you once get it built up and go along, it is all right; but they started this machine up, and they were used to starting it up the other way, and didn't get their head quick enough, and they finally found out this wire was up, and they got after me about it, and said, you leave this matter alone. I have always understood that this matter of pitch—since this Frenchman told me the faster it run the less pitch you must have, I have talked this there, and have always said it and always known it, and always felt it, and I have changed them running in the old days, when it didn't suit me. We had no adjustments like we have in this Horne machine and the modern machine, and I used to keep at the thing, and start the boys, and go down there with a wrench and one thing and another, and adjust them very carefully all the way through, a little bit here and a little bit there, and spent hours at a time, and got them where I wanted them. That is saying quite a little bit, to say you have adjusted it while the machine was running; but I have done it,

nevertheless.

XQ213. Those adjustments you speak of were table roll adjustments? A. Side bars; part of the table.

XQ214. Well, did the superintendent take off that half-inch that you speak about, that you put in? A. I believe that it was changed afterwards, although we had a good deal of talk about it.

XQ215. In that Sorg machine, what was the speed of the machine before you put in that one-half inch adjustment? A. About 250 feet.

XQ216. And the same after the adjustment was put in? A. Well, we gradually built the speed of the machine up for a little bit more; but the main reason of raising the pitch was to get a better sheet. We were not making the right kind of sheet, with a pitch low, due to the free stock; more of it settled out, and it didn't flow up the wire properly. They had a free stock, and wanted—

XQ217. Was the idea to get the water in the stock further down the wire? A. No, that had nothing whatever to do with it. The free stock will settle out more fibres right at the edge of the apron, and you lose more water, and you have less water to flow up with; therefore, in order to keep this water flowing at the exact speed that the wire flows, it was necessary, in this case, to get the pitch up.

XQ218. How did you happen to testify in this case? A. Oh, well, a letter come along from a friend of mine up in—what was the name—Mr. Weber, and said that he knew I had had a good many years' experience, and wanted to know what I know about it, and I replied to him that I had always known a good deal about these things. I volunteered to testify.

XQ219. Who was Mr. Weber? A. He is out at the Waltham Pulp & Paper Company. I believe he is secretary of some association or something, that is in this case. I don't know much about it. All I know is that this letter came along, a circular letter, I believe it was. I don't—

XQ220. Have you that letter with you? A. No.

XQ221. A copy of it? A. No.

Mr. Lyman: Will you produce a copy of it?

Mr. Paul: No, I don't care to produce it.

Mr. Lyman: I should like to request you to produce that letter.

Mr. Paul: I will, if I can find it. I don't know where it is. I haven't it with me. I didn't pay any attention to it. I simply wrote him a reply, and the letter was passed to me on my desk at Middletown, and is probably in the wastebasket.

XQ222. What was the nature of this association from whom this came? A. If I remember, this circular said that there was a case on. There was something—let me see—there was a fight being made against the Eibel patent, I believe, and it was important to all manufacturers to—you know the word—to all manufacturers that used wires at an elevation of more than 5 inches, I think he said, to take the matter up, something about that, words to that effect. I don't remember that, at all. I didn't pay very much attention to that. It was never even filed. I know that, because I am pretty sure it was a circular letter.

XQ223. And it came to you as superintendent, or as manager? A. It may have been addressed simply to the Sorg Paper Company. I don't know. It was thrown over on my desk.

XQ224. Did this circular ask for the co-operation of the people to whom it was addressed, in a financial way, in the defence of the suit, also? A. I don't remember that. I don't remember it. I simply—all I can tell you about this is, that there came a letter along stating that there was a lawsuit on about this case, and I have known Mr. Eibel since he first got this thing up, and I have been deeply interested in the subject, and —I don't know whether you want all this in the testimony, or not.

XQ225. Yes. A. I was always deeply interested in it, and I argued this thing out with Eibel one night, one night up there at the Sherman House, until after the three o'clock train went along. And I have known Mr. Little over here, ever since I was a boy, out here in East Walpole, and Fitchburg, and so on, and I have talked with them all about it, and my own opinion about it is Eibel didn't know exactly what he was doing there on that thing, because Eibel told me that the great benefit this was, was that the water drained out better when the wire run down-hill than the other way, and that he had proven it by taking a piece of wire off and holding it like that, and poured water on it, and that the water did not run as far down-hill with this wire this way, as it did in the other way, and I contended that had nothing whatever to do with it. I told him that it was absolutely a matter of speed, a matter of the velocity of the water carrying with the wire. And if I remember this now, Eibel didn't contend for that, at all. His great thought when I talked with him about it was that it was a matter of drainage, that it drained out clear.

Mr. Lyman: The answer is objected to, as it purports to relate the substance of conversations with Eibel and someone else, which was hearsay.

XQ226. This conversation took place after Eibel's patent was out? A. I think so. I don't know whether it was out or not. They had had something done, and they had done something with Stone & Webster about it. I don't know whether it had been taken out; don't even know today who took the patent out.

XQ227. At any rate, it was after Eibel's application had been filed? A. Probably, yes.

XQ228. Well, you agree that Eibel got up a pretty novel and valuable idea in putting in the high pitch in high speed machines, don't you? A. No.

XQ229. Who signed this letter that asked you to testify? A. I can't answer that. I think it was Mr. Weber. I am pretty sure, but I don't—I couldn't swear that was so.

XQ230. How did you get in touch with Mr. Paul? A. I wrote a letter to Mr. Weber, and he referred the letter to Mr. Paul.

XQ231. Then Mr. Paul wrote to you asking you to see him? A. Yes.

Mr. Lyman: I should like to have you send down that letter that you received from Mr. Weber, if it was he, to the notary here, so that it can be annexed to your deposition.

Mr. Paul: I decline to have the witness send the letter.

XQ232. Mr. Smith, do you decline to send the letter? A. I don't think I can find it, because I don't know where it is. It wasn't filed. There wasn't any attention paid to it, and if it is possible to find it, I shouldn't decline—I wouldn't decline to send it.

XQ233. Will you agree to make a search for it, diligently, and to send it if you find it? A. I will.

XQ234. And will you be able to do that in the course of the coming week? A. Let us see, what day is today? I doubt if I will be able to do it before next week.

XQ235. Will you, as soon as you get home, please, write to the notary here a letter which says whether or not you have been able to find it? A. I will.

XQ236. And if you find it, send it in the notary's name? And will you also be kind enough to send me copies, at my address, at 84 State street, Boston? A. Of my reply?

XQ237. Of your reply, and of the letter. A. You mean you want me to make a typewritten copy of this?

XQ238. Yes, if you would. Well, that will be all right, if it comes to her. A. (Witness making note.) Send original letter received from Weber, if possible.

(Noon recess.)

Afternoon Session.

Young's Hotel, Boston, Mass., 2 P. M.

Cross examination of Abiram F. Smith, resumed.

XQ239. I hand you a copy of letter, and ask if this is substantially similar to the letter that you received as you testified?

Mr. Paul: Objected to, as irrelevant and immaterial.

A. I don't think this is the letter. It don't look like it at all, to me, because this seems to be—is this supposed to be the letter?

XQ240. Read it over. A. Or a copy of this?

XQ241. This is supposed to be a copy of the letter. A. Oh! (Examining letter.) I think that this may have been something similar. I didn't read the letter that I had out home through, as thoroughly as I did this, because it came to my desk in the morning mail, and as I recall the letter, it was a circular letter printed, and being very busy, I didn't read it particularly, at all, and I am under the impression it didn't have as much in it as this, although it may be something similar. I couldn't say.

XQ242. Do you think it came from the same source as that? A. I don't remember anything about those names up here. I don't know—the fact of the matter is that I can't tell you whether it is the same letter or not. It may be and it may not be, and I don't remember the name Dewey, at all. All I remember is that I saw that the letter that I had, the letter that came to me was Mr.—what did I say the name was? A letter of Mr. Weber. There doesn't seem to be any name of Mr. Weber on that.

XQ243. Look at the last paragraph of that letter. A. Yes, that says—that is probably where I got that. I didn't notice that. I didn't know who signed this, or I didn't pay much attention to it. It might be, and it might not be. I couldn't be positive.

XQ244. You think it was probably the same as that letter? A. It may be. I don't know. I know that mine was not a typewritten letter, and therefore I am pretty sure it was a printed letter, and as to what my letter said I don't remember, except I remember something about it, that it was somewhat similar to that. I didn't read it through, just simply saw what it was and saw the proposition, and afterwards I wrote him a letter, and that is all I remember about it.

Mr. Lyman: I ask to have this letter marked for identification, with the character "X."

Mr. Paul: That is objected to, as immaterial and irrelevant;

also objected to as incompetent. It seems to be merely a copy of some paper.

(Paper marked "X for Identification.")

Mr. Lyman: I will ask Mr. Paul if he will state whether it is a fact, or not, that the defense of this suit has been undertaken by the so-called "Committee to invalidate the Eibel Patent"?

Mr. Paul: I decline to make any statement. It is not material.

XQ245. How much of a pitch would you want on a wire running at about 100 feet a minute, a 40-foot wire? A. That would be governed by the way the stock looked on the wire when we were running a certain stock at 100 feet; it might be a little different in one than in another. If the stock was one that required a lot of water at 100 feet, in order to hold that water in control, you would probably have that pitch lower than you would on stock such as I mentioned, up at the Bardeen Paper Company, in which you couldn't work much water, because of the fact that it wasn't drawn out, and you had a very little head, and you would change your pitch. So my answer to that question is that to determine that speed, and the pitch that was required by that speed is determined by the stock, and the amount of water that can be worked in. With more water you would, at that speed, require more pitch on one stock than on another stock. It would require a little lower pitch, in order to control that, in order to keep it from moving forward faster in the water than with any stock in which you could not use it.

XQ246. Then the pitch you would use depends upon the quality of the stock, whether it is free or close stock, or whether it retains more or less water? A. No, that is not the way I am putting that; that whether you can work more water in a stock —you can sometimes work—you might be working a thin sheet of paper at that speed, or you might be working—oftentimes you work a sheet of paper of one weight at a speed the same as you run one at another weight, because the character of it —may be it requires more time in your beaters. For instance, you may have a stock of rag that would have to have six or eight or ten hours in the beaters. That might be going into a very high grade of bond paper. You would run that slow, because you couldn't keep up with your beaters, and I might say to you I needed a certain pitch at a certain speed, but that wouldn't be the final answer to it, because the weight of the sheet and all those different things, enters into it. Primarily I would say that speed had a good deal, and a great deal, and the most to do

with it; but there are other factors which determine the final small adjustments of that pitch.

XQ247. Those factors include the weight of the paper which you are making, and the quality of the stock, whether it was free or slow, do they? A. They include the amount of water—I will say that it would include the amount of water that you are able to put into that sheet of paper, on the wire. If it is such stock that you are able and have, in order to handle it, to use more water, then you would adjust your pitch at the same speed, and a little lower; but if you had to use less water, and it was difficult to make it flow up-hill, you would adjust your pitch up a little bit higher.

XQ248. How high would you use the lower pitch? You are not talking about pitches that are running up-hill, are you? A. Running up-hill from the breast.

XQ249. Why would you have to use a lower pitch when you have more water in the stock? A. In order to hold that water back, keep it from rushing forward faster than the speed with which the wire was traveling.

XQ250. And by a lower pitch in that connection, you mean one in which the breast roll is lower down? A. Lower than the—

XQ251. Lower than below the level? A. In which the breast roll is lower than the last table roll, that is, the table roll next to the suction boxes.

XQ252. I am simply trying to find out what you mean by a lower pitch, in that connection, when you are talking about two pitches, in each case, the wire running up-hill; which do you call the lower one, the one in which the breast roll is further below the level than the other, or the one in which the table pitch is less than the other? A. Well, I have meant to convey each time that I have stated—if I haven't stated it, the way I would speak of that is as follows: The less pitch means less down-hill.

XQ253. Is it up-hill? We are talking about up-hill. A. Well, all right, less up-hill.

XQ254. Is that what you mean? A. Because the original pitch is long before—

XQ255. Just a minute. By the less pitch, do you mean the same thing as you mean by lower pitch, as you have used the word? A. Well, to get back to the—

XQ256. No, you can answer that question. A. I can't, because you are liable to have that all wrong in the end. I—

XQ257. Let me ask you another question. When you have two stocks, one having a greater amount of water than the

other, other things being equal, you would run the one having the greater amount of water with the breast roll lower down or higher up, than in the case of the one having the lesser amount of water? A. That would be determined by the speed with which it was running, and at the same time, as to two stocks running at the same time, as to the one that required more water to make it form it properly, in order to control that water, you would require your breast roll depressed below level more than the same stock at the same speed, in which it was impossible to use quite so much water.

XQ258. Now supposing you were running those two stocks with the down-hill pitch of the wire, that is, with the breast roll elevated above the level, would you give the stock that had the more water in it a higher elevation to the breast roll or a lower elevation to the breast roll, than the one that had the less water in it? A. When you are above level and you didn't have and you could not work as much water in one sheet as in another sheet, then, by reason of the fact that you didn't have as much water coming around and building a head up running out on the wire, I would say that you would probably raise the wire somewhat more, with a less amount of water, in order to assist that smaller amount of water to keep up with the speed of that wire.

XQ259. Now coming back to the 100-foot speed, what would be the average elevation, an average pitch? A. You say what would be the average. There is a great many factors enter into the thing, that may cause you to vary a little bit; a slight difference in the height of the slices, and so on, will alter the amount of pitch you have; but I would say that on an average, you will find that machines that run 100 feet, that are running 100 feet, would have a pitch of approximately one inch below level.

XQ260. That is, the breast roll would be— A. Below the level.

XQ261. One inch below the level? A. Yes, and that would be just a very rough statement, because that would be—an inch below level on one wire would be considerably different than an inch below level on a shorter or a longer wire; but I would say that that would be below level.

XQ262. I find here a statement in a publication which has been put in evidence in this case, reading as follows: "A 40-foot wire traveling up to 100 feet a minute, will require a pitch of about three-quarters of an inch from the breast roll to the first guide roll;" you would agree, I take it, in general with that statement? A. A 40-foot wire traveling at what?

XQ263. Up to 100 feet a minute. A. Up to 100 feet a minute would require a pitch of what?

XQ264. About three-quarters of an inch from the breast roll to the first guide roll. A. Well, I would say that that would possibly be that that was about right, that is, that is an up-hill pitch, if you were running only 100 feet. Of course if you have any head there above 100 feet, that amounts to anything at all, without an up-hill pitch to counteract it, the stock is bound to flow faster than that on the wire.

XQ265. That, of course, needs an up-hill pitch of that amount, then? A. I will say, I should consider it did.

Mr. Lyman: It is noted that the quotation read to the witness is found in the Defendant's Exhibit, "Practical Paper Making, by George Clapperton," at page 93, lines 7 to 9 on that page.

XQ266. What pitch would you want that 200 feet at, on an average? A. I think I stated in the testimony this morning, that around 180 feet, we, as a general thing, would have a wire about level; but at 200 feet, you begin to get to the point where you want to begin to assist—or something near that—where you probably want to assist your water along.

XQ267. When you had a speed at 250 feet at the Sorg Mills and at the Hanna Mill, you put in a pitch of, did you say, one-half inch? A. Those figures, if they are fluctuating at different times, sometimes slightly, would be modified by the amount and length that that pitch was from the suction box, back. Now, do you claim—

XQ268. You are getting away from my question. I am just asking you if you so testified? A. I don't want to contradict this testimony, and the questions are asked me, so many of them, that I do not remember the exact, but I am standing on this one point, that when we run faster—

XQ269. Well, now, hold on. A. All right.

XQ270. You can't answer my question? A. I can answer the question if I can get it clear, sure.

XQ271. I am simply asking you whether you testified that you put in on the Sorg machine and on the machine, the Hanna machine of the Crocker, Burbank Company, a one-half inch pitch for a speed of about 250 feet per minute. A. I testified that at the Sorg Paper Company, when they were running 250 feet, the pitch was down, and that I raised it up to about one-half inch above level. At any rate, that is about what we done there. We got it up to—we got it up higher than what it was, somewhere around there, and at the Hanna Mill, I testified that at the same speed, that when they attempted to raise this speed up, that they would have a pitch that was about, I would say,

approximately three-quarters of an inch below, and that we brought it up, trying to get it about half as much, and it would bring a little less pitch—

XQ272. Well, in one case, then, you had it below level; at the 250 feet you had the breast roll below the level, and in the other case, a half an inch above the level? A. I think that is about the way it was.

XQ273. And either one was practically all right for that speed, was it? A. Well, no, the—I had nothing to do with the Hanna Mill in altering it. I simply stated what they had done there, and I asked the question as to why they had done it, and—

XQ274. Confine yourself to my question. A. Well, I can confine myself to your question, but, my dear boy, when you begin to ask those questions, you are getting off the track on that thing.

(Last two questions read by stenographer.)

The Witness: Now let me make just a clear answer to that question. The Hanna Mill may or may not have been right for that speed. I take it that they have done and what they have told me they have done at Sorg—at the Sorg Paper Company, where I was the man that had the say as to whether or not that pitch was the proper amount of pitch. I gave it such pitch as I could get above level, at that time, with that machine, and I will say that it was not quite enough; but we had no way of getting more, until we put in other machinery.

XQ275. How much do you think there ought to have been on that machine? A. On that machine?

XQ276. Yes. A. I would have had that pitch, if I could have got it—put it up there without too much trouble—I would have brought it up to such a point as when I—

XQ277. How much? A. I don't know. I would have looked over in there, and I would have saw that it wasn't enough, and then I would have put it up until it was such a point.

XQ278. But you can't tell us how much there ought to have been on that machine? A. On the kind of stock that we were running at that time, and the amount of water that we could handle in it, I should have had it up somewhat more than we did put it, as I remember distinctly of seeing that it was possible to put it up a little higher, or an inch above level.

XQ279. How high do you slice it on that machine, the Sorg machine? A. Off from the wire?

XQ280. Yes. A. Well, I have never measured that, particularly. I know the slices, when conditions are right, run

about three-quarters of an inch off from level, on speeds of that kind, on account of the paper being handled. I would say, in answer to that question, that they were probably three-quarter slices, but it is only one slice. I will say that it is probably five-eighths of an inch.

XQ281. And how high was the slice bar? A. The slice bar was—I don't remember whether those slices had a slot in the center of them, or not. The bar itself was probably about five inches, and there may have been a slot in the middle of it, which in those days, was allowed to slop over. We oftentimes used to put paper in front of that, to keep it from slopping over.

XQ282. How high a head could you have carried on that? A. You could have carried a four or five-inch head. You could have got it up to the top of the slice, but that don't mean that you could—you say how high could you? From one standpoint of your question—you want to know by reason of the slices, how much you could carry. I am talking from the slice point. The height of head you could carry there, would be the amount of water you could bring around and could get rid of.

XQ283. How high a head could you carry, under all conditions that prevailed there? A. Well, as far as the slices are concerned, we could have carried a 4-inch or a 5-inch head.

XQ284. And how high did you carry? A. We probably carried between 2 and 3 inches.

XQ285. What speed would that stock issue upon the wire? A. With a head of between 2 and 3 inches, do you mean?

XQ286. Three inches, yes. A. (Witness figures.) About a theoretical velocity of 216 feet per minute. I haven't carried that out to the fine fractions, and I haven't taken—

XQ287. (By Mr. Paul.) For what head? A. For two and a half inch head. I took it between the two.

XQ288. (By Mr. Lyman.) When you speak of a speed of 250 feet on that machine, you mean the pitched speed? A. Pitched speed, and that of 250.

XQ289. Do you know whether there is a difference between the wire speed and the paper speed? A. I have heard this mentioned, and in my own judgment, there is absolutely no difference between the speed of the wire and the speed of the paper, in passing over the suction boxes. After it begins to go through the couches, that is a different proposition. It may be slightly elongated, by stretching it out; but the first fibres that fasten themselves on the wire stay there, and must of necessity; unless they are disturbed and rolled around and pulled back, they must, of necessity, follow the speed of the wires.

XQ290. But your speed of the 250 feet per minute, is the

speed at the lower calender, speed at the reel? A. I never have timed it right at the calender. It is timed from the line shaft by electrical instruments, so that we will say that that was the average speed of the machine. It may have been slightly different at one point than another.

XQ291. Where was that measured? A. It was taken from the line shaft—the electrical instruments were attached to the variable speed shafts, and they were calibrated to show the speed per minute at which the paper was delivered on to the reel.

XQ292. So that the wire speed would be less than that, would it not? A. I wouldn't answer that question positively, because for this reason, that although I know that that is all taken into consideration by reason of the difference in pulleys on the different speeds of the machine, at the same time, I would not answer that it was or was not.

XQ293. You don't know? A. I can't say.

XQ294. Tell us what the initial speed there would have been for a 3-inch head? A. What the theoretical velocity of the water was, with a 3-inch head?

XQ295. Yes. A. Approximately, 240 feet a minute.

XQ296. Would it have been possible for you to use a higher head on that machine, than you did use? A. Possible, but not practical.

XQ297. Not practical? A. That will lead into an awful lot of stuff. The thing now—you ask that question, and the long answer to that, we might have used a higher head than we did use, thereby increasing the velocity at which it flowed out on the wire; but that is undesirable.

XQ298. Why? A. Because velocity is due to the height from which a body is falling, and when you have height in a body of water, you have pressure at the bottom of it, in all directions. Equal pressure is down so much, out so much, and relatively the same depth, and if I increase my head, I would force more water through the wire at that point, thereby plugging the wire full of fibres at that point, and causing the wire to be like a sheet of tin, run down so that you could not drain the water through properly, and form a sheet rightly on that high surface.

XQ299. The primary reason why you put in that one-half inch pitch then, was to get rid of the water that you had to carry in that stock, was it? A. You mean drainage of it?

XQ300. Yes. A. Nothing to do with that part of it.

XQ301. Referring now to the cases where you run the stock—run the wire up-hill, thereby forming a pool in front of

the slice on the wire—is it your view that the effect of that pool and the reason for depressing the breast roll in such position, is to counteract the head that you have behind the slice? A. That may be answered by the simple answer yes, that is to counteract the flow of the water faster than the wire is run.

XQ302. That is the purpose and effect of that up-hill pitch, was just the same as a decrease in the amount of head behind the slice, and the reason you used that, was that it wasn't possible to decrease the head lower than you had it; is that it? A. I might as well answer yes to that, because it is about what it sums up to. With the level wire, without it being depressed below level, you are depending entirely on holding it back with your slice, and the minute you try to hold it back on a level wire, you create a slight head, and the very slightest amount of head will cause a velocity which is more than these very slow speeds about which we are talking.

XQ303. Have you ever had any experience with high pitches? A. Well, not—I have never run a pitch—I can answer that no. When you say "high pitches," how far do you mean? When you say "high pitches," you mean how high?

XQ304. What do you call a high pitch? A. Well, the—I would speak of a pitch on our present machines, in the following manner: "Just give it a little higher pitch," meaning thereby a rise above what it was previously. That is all—you have got to come back here and ask me that question, so I can answer it properly. You wanted to know if I had had experience with high pitches.

XQ305. What pitches are you carrying on the machines, at the present time? A. Up to 4 inches; between 3 and 4 inches.

XQ306. Do you call those high pitches? A. Considerably higher than one that was three or four inches below level.

XQ307. Please answer my question. A. The question is—

(Last question read.) A. No.

XQ308. Have you ever had any experience with high pitches? A. Yes.

XQ309. Where and when? A. At the Sorg Paper Company.

XQ310. When? A. Well, let me come back to this other question.

XQ311. Just answer my question. A. If I have what?

XQ312. You said you had experience in high pitches at the Sorg Paper Company. Now, I ask you— A. And previous to that I said that I didn't call this three or four or four or five pitch a high pitch.

XQ313. Yes. A. And I will answer that in that way. I

put this question first, as to what was called a high pitch.

XQ314. Well, I am not on the witness stand. A. I understand that, but you are not giving me a fair question. Now, in the first place, I asked that question.

XQ315. Now, please tell me what height pitch you have had experience with, at the Sorg Paper Company, and when? A. Pitches up to 4 inches.

XQ316. And never anything higher? A. No.

XQ317. Now, you have said, if I remember you correctly, you used a phrase in one answer a while ago, that when Eibel got this thing up, something happened; you talked with him about something. What do you mean by that, when he got what thing up? A. Well, what I meant to convey was the—when he elevated a machine, when he elevated paper machines that I remembered had been higher than I had knowledge of before, than they had been run before.

XQ318. When did you hear about that? A. As near as I can remember, I heard of that in about 1909.

XQ319. How did you happen to hear about it? A. Well, I don't remember just how I heard of it. I don't remember how I heard of it first. I went up to see it shortly afterwards, shortly after I heard of that. I remember that. I went up to see it, but I don't remember how I heard of it first.

XQ320. Why did you go up to see it? A. Because I was interested in that, and had always been interested in it, and I wanted to see it in operation.

XQ321. Why did you want to see it in operation? A. Curiosity, is about the best answer. I wanted to see it run. I wanted to see it—I had always had that theory, and I wanted to see the thing. I heard that they were doing it, and I got on the train and went to see it. I didn't go to the Rhinelander mill. I went to the Wisconsin Pulp & Paper Company, I think. It was probably a year or so after they had elevated them up there.

XQ322. Did that strike you as something unusual—extraordinary? A. I don't know as it struck me as extraordinary. I wanted to—we were about to order a paper machine, and I wanted to see the paper coming on the wire with a pitch higher than anything I had ever used, before we placed the order for a machine. That was the main reason I went there. I will say that was outside of the—people interested in the paper business, it was worth while seeing the machine running with a higher pitch than I had ever had.

XQ323. It is a fact, isn't it, that as soon as Eibel had demonstrated that you could use a high pitch on a Fourdrinier machine, that the high pitches were adopted pretty universally by

news machines in the country? A. I heard that they were, yes.

XQ324. And as a matter of actual history, that followed upon and was due to Eibel's demonstration? A. I don't know. I don't know that they done it on that account.

XQ325. Well, you feel practically sure of that, don't you? A. I—they were increasing speeds all over the country, and I had heard of machines that had a pitch well above level. This being the nearest place in which I could see one, that is why I went where I could see it.

Mr. Lyman: Answer objected to as volunteered, and not responsive answer to the question.

(Last two questions read by stenographer.)

The Witness: I have answered I don't know as to what other people done. I don't know what other people done or why they done it. I think it would be wrong to state that I—that I feel sure that it followed upon that.

XQ326. Well, at least it is possible that that is the fact. You will go that far, won't you? A. No, I can't even go that far. I have no idea what other men thought about these things.

XQ327. Do you consider that you can get the same results of increasing the head as by giving a downward pitch to the wire? A. No.

XQ328. Why not? A. I wish that pen would stop writing for a minute, because the first thing I will do a lot of talking here, and then it will be thrown out as irrespective of the question. I have already answered that in a longer explanation, which I said to you before, and give you my reasons for it.

XQ329. Will you please draw a little sketch that shows the slice of the wire, the pond behind the slice, and pool in front of the slice, when you are running with your wire uphill? A. I won't draw that without I can have a ruler. I don't want to draw a sketch without a ruler. I want a scale ruler before I draw anything like that. (Foot rule produced by Mr. Paul and given to the witness, who makes a sketch.)

XQ330. Is there any flow of the stock on the wire, beyond the end of the pool? A. When the pitch is about right and when the slices are adjusted properly, the movement of the water out underneath the last slice is at approximately the same speed as the wire.

XQ331. And the water goes then into a pool which is practically stationary, does it not? A. Well, practically stationary is not the right word to use. I think it is the—you have the pool which must be moving forward some, somewhat, in relation to the wire. If it isn't, it wouldn't keep moving. The wire would run away from it.

XQ332. Isn't this the fact, that when you have that arrangement, the wire drags through a pool which is standing just in front of the slices, and picks up the fibres from that pool, and takes them along with it? A. No. The wire may assist, somewhat.

XQ333. There is no flow of the water beyond the end of that pool, is there, and no tendency to flow? A. No tendency to flow faster than the water.

XQ334. There is no tendency for it to flow at all beyond the pool, is there? A. That is the only thing that happens after you come to the end of that pool, is that the wire emerges from that pool with fibres clinging to it,—part of the fibres.

XQ335. Part of the fibres that were in the pool? A. That were down in the bottom.

XQ336. Yes. A. And the balance of the movement is caused by a slight difference in head between one side of the slice and the opposite side of the slice, which is just sufficient to give it the movement.

XQ337. How far ahead of the slices does that pool extend, when you are running uphill? A. The pool does not extend to the head of the slices. You are supposed to have your sheet of paper—

XQ338. Well, you show on your sketch a pool lying— A. Back of the slices.

XQ339. Lying on the— A. Apron.

XQ340. No, you show on your sketch there a pool lying toward the guide roll from the slices. A. This is the guide roll, up here.

XQ341. This here is the pool? A. That is the sheet of paper. There is no pool. That is the thickness of that sheet of paper. It is then filled with water. It is water and fibre in very thick sheets, but you have got your sheet there, and that water simply begins to drain out of it. Moving that along with the wire, it gradually gets thinner. At that point it may be half an inch thick, and a point further, it may be 7½, and at the time it gets down to the end of the deckle strap, it may be an eighth of an inch thick.

XQ342. Do you mean to tell me that the stock at the point which I mark A on your sketch is moving as fast as the wire moves, as the wire below it is moving? A. The entire mass at that point is moving at the same speed as the wire, approximately. It is always very close to the speed of the wire.

XQ343. Is it your view that the effect of a downhill pitch to the wire on high speed machines, is the same as the effect of an uphill pitch to a wire on low speed machines? A. Is it that

the effect of a downhill pitch to the wire on high speed machines, is the same as the effect of an uphill pitch to a wire on low speed machines? What effect do you mean?

XQ344. Any effect. A. You qualify that by the word "any" —any effect.

(Witness writes the question at the dictation of the stenographer.)

A. No.

XQ345. Wherein do they differ? A. The effect of the downhill pitch on a wire on a high speed machine, is to assist the stock to flow at the same rate of speed as the wire, without carrying a high head and plugging the wire full, by reason of the high head. The effect of an uphill pitch on a wire on low speed machines, is to assist preventing the water from running faster than the speed of the wire, and allow you to keep the slices up, thereby not pushing water through right at the slices, and preventing it from going through, further out on the wire.

XQ346. How far from the slices toward the guide rail does this pool extend, when you are running with the wire uphill? A. As I get his question here, he is trying to show there was a pool extending forward to that slice. All right, suppose I am running a sheet of paper that is extremely heavy; that sheet of paper is made, formed, good or bad, right there, and in a thick sheet of paper that pool, as you are pleased to call it—I call it a sheet of paper—that does elevate that slice, because it will be two inches wider at the deckle straps. Take a sheet of paper that is 24 by 36, three or four hundred pounds, the so-called pool in your question is the formed sheet of paper from which you are now draining the water, and this pool or sheet of paper —which shall I call it—is continually becoming more shallow right up to the suction box, as the water drains away from it.

XQ347. I hand you an extract from the work on paper making from which I quoted, and ask you to read this paragraph on page 93, beginning with the words "a 40-foot wire"—please, and end with this. A. You want to get the whole thing, do you? Well, I—

XQ348. Look it over, the preceding pages; please look over pages 92 and 93. A. I have this book out home. I know about what it means. You want me to read here?

XQ349. Not on the record. I am going to ask you a question about it, as soon as you have got it in mind. A. I have it.

XQ350. What kind of pitches do you understand that the writer is talking about, in that paragraph,—uphill pitches or downhill pitches? A. I have never been able to make it in my mind clear. I have never been able, in reading this book, to de-

cide what he means there, because in my opinion, if he means that he—if he means here that the faster he runs that it would require a still lower pitch down, I contend that he is wrong. I don't agree with him at all on that. But I don't know whether—I never have been able to make up my mind as to what he means by that. I think it is plain what he says, and I do not agree with him, if what he says is, as I take it.

XQ351. That is, you think he is talking about uphill pitches there? A. Yes.

XQ352. And you don't agree with him? A. And I don't agree with him, if he is talking about uphill pitches.

XQ353. And that is what you think he is talking about? A. I would judge from the language here that he is talking about increasing the uphill pitch, at the increased speed of his machine, which is, in my opinion, the exact opposite.

XQ354. Are you familiar with the Barrett and Horne patent, numbered 634,228? A. I don't know it by number.

XQ355. (Showing book to witness.) You are familiar with it? A. I never saw that particular patent.

XQ346. Then I ask you to read the passage contained on page 1 of that patent, between line 16 and 30, and tell me whether you agree with that statement, or not. A. The passages between 16 and 30?

XQ347. Yes, between the lines 16 and 30. I ask you whether you agree with that? A. Well, I will read this question and let her put it down, and then I will answer, as soon as I read. You want me to say no to this, and I don't want to say no to this.

XQ348. Well, go ahead. A. It says:

> "In certain kinds of pulp, notably the wood pulp which is now largely used in making paper, the water drains away very rapidly, so that the pulp may become nearly dry before it leaves the shake-frame, and thus not be properly laid when it reaches the rollers. This tendency may be obviated to a considerable extent by downwardly inclining the shake frame toward the rollers,"—

I agree with that, so far—

> "so that the water tends to travel along with the pulp"—

That is all right.

> "will not, therefore, drain out through the wire so rapidly."

The amounts that it drains out through the wire are detertermined by other considerations that it does not mention or speak of here, which might change this. In other words, if they have too high a head in the start, and fill their wire full, it can't drain through; but the wire will be more like a piece of tin, due to the high head preventing it from draining through properly.

XQ349. I take it from your answer that you do not believe that the same results can be obtained by increasing the head as by giving a downward pitch to the wire; is that correct, in spite of your answer? Your answer is not particularly— A. The question is, that I do not think that the same result can be obtained by increasing the head—

XQ350. Behind the slices, and by giving a downward pitch to the wire? A. Up to a certain point, yes.

XQ351. To what point? A. That would be determined by the nature of the stock that you were running, if it settled down on the wire and filled it full, and at the point wherein your head caused the stock to settle on the wire to such an extent that it filled the wire too full, you ought to stop then, and not build your head up more to obtain the results, but raise the wire and have the effect of the head without the effect of the pressure due to a higher head.

XQ352. When you use a downward pitch of the wire, you can use a thinner stream of stock issuing upon the wire to get a given velocity than if you get that velocity by increasing the head back of the slices? A. I don't know what you mean by a thinner stream.

XQ353. I mean that when you use a high head back of the slices, you have to leave a comparatively narrow slice opening, don't you? A. I would say that the—yes.

XQ354. And on the other hand, when you get that same speed that you might obtain by using a high head, by pushing the wire and issuing a low head, then you leave a comparatively wider slice opening? A. Yes.

XQ355. And that is an advantage, is it? A. Well, no, I don't want to say anything about it. I will say that what you say is right, up to that point; but I won't say what—because your idea of the advantage and my idea of the advantage in the lower heads, are different. Your question is that it is an advantage to have the thicker stream there. It isn't the thick stream that is the advantage.

XQ356. Well, however it may be, in your judgment, it is better to use a downward pitch of the wire and a low head, rather than a flat wire and a high head? A. It is, for various reasons.

XQ357. What was the head that they used on the Hanna machine, at Fitchburg? A. You are speaking of the pool, I suppose. About 2 to 3 inches.

XQ358. When you are using an upwardly pitched wire, does the stock on the wire travel at the same rate all the way down to the guide roll, from the slices? A. If the sheet is heavy enough, yes.

XQ359. Supposing the sheet isn't heavy, what then? A. The bottom portion of it travels at the same speed as the wire, and the top portion of it should travel at the same speed of the wire, if handled properly.

XQ360. If the wire is running uphill all the time, how do you explain that that stock running, as I understand you to say uphill all the way to the guide roll, retains the same velocity? Why is it not constantly retarded? A. Because it is—in the heavier papers, as I spoke of it, the consistency of it is rather thick, and the friction underneath there carries it along with it, instead of allowing it to go back.

XQ361. How about the thinner paper? A. You give it the velocity by the adjustment of the pitch and the amount of head that you start it along with.

XQ362. That gives it a certain initial velocity? Then, if it is running uphill all the time, why doesn't that velocity decrease just as the velocity of an automobile that coasts down one hill and up another, decreases until it finally comes to a stop? A. The water is draining away, and the sheet becomes thinner as it moves along there, so that you really—to a certain extent there you have the top part of the sheet level, as against the bottom wire being under. You can draw in your mind there that in issuing out from the slice, what I call a piece of paper with the water mixed in it, that is formed right there on the heavy sheet, is very thick, and up here, this wire is running uphill. This water here is gradually getting thinner and draining out. There is nothing to go back, and it goes down through the wire; it is pulled through.

XQ363. You said that in the Sorg machine you were unable to raise the head, because if you raised it the stock would clog the wire between the end of the apron and the slice. A. If you increase the head more than a certain amount you—well no, as you increase the head, you not only increase the velocity, but you increase the pressure at the point right under the slice, and it is not desirable to increase the head to such an extent that you push through the wire more than a certain portion of stock, at this point.

XQ364. That, as I understand you to say, was the reason you couldn't increase the head at the Sorg machine, on the Sorg machine? A. Well, we went all through that in the previous question, and I said it was not desirable to increase the head. I didn't say that it couldn't be increased.

XQ365. Why couldn't you extend the apron up through the slices and take care of it that way? A. Because that is not a desirable way, in my opinion, to make paper. It isn't a

desirable way to make paper.

XQ366. Why not? A. It is desirable to felt on to the wire right at the end of the apron, a certain amount or a certain percentage of the sheet, and then fill into the remaining water, so as not to disturb that portion of it which has already been deposited on the water.

Mr. Lyman: That is all, except for the production of that letter.

The Witness: You mean you want me to find the letter at home. I have a note of that.

(Cross examination closed.)

RE-DIRECT EXAMINATION.

By Mr. Paul:

RDQ367. You said somewhere in the cross examination that speaking of what the Frenchman told you, that he said, as I remember your answer, when you increased the speed you wanted to use less pitch. You were speaking then of a pitch below the level, weren't you? A. Starting the pitch below the level.

RDQ368. And as you increased the speed, you wanted less of the pitch below the level? A. Yes.

RDQ369. To come up more nearly to the level? A. Yes.

RDQ370. That was the idea that he gave to you, at that time? A. Yes.

RDQ371. How many different kinds of paper do you make there at the Sorg Mill? A. Why, hundreds and hundreds.

RDQ372. More than a hundred different kinds? A. Oh, yes, unquestionably, consisting of—do you want me to call—

RDQ373. Yes, mention some of the different papers. A. Well, consisting of paper running all the way from 24x36, 8-pound, to 24x36, 400 pound, and for an inconceivable number of different purposes and uses, specialties, made of all kinds of fibre, including rope, jute, rags, sulphate, sulphite, kraft, soda wood, old papers.

Mr. Paul: That is all.

Mr. Lyman. That is all.

RXQ374. (By Mr. Lyman): Do you make newspaper there? A. No.

RXQ375. Do you make newspaper at any of your mills? A. Have I?

RXQ376. Yes. A. In any of the Sorg Paper Company's interests?

Mr. Paul: Any of the mills that you are superintendent of?

The Witness: No.

(Adjourned.)

607 Old South Building, Boston, Mass., Wednesday, January 2, 1918, 11 a. m.

Met pursuant to adjournment. Present as before.

JOHN N. DAVIS,

re-called for further examination, testified, in answer to questions by Mr. Paul, as follows:

By Mr. Paul:

Q171. When you were on the stand before, Mr. Davis, I asked you in reference to the amount of business done by the Pusey & Jones Company in machines for newsprint, and you stated, in substance, that that company made other machines, but that they made more of these machines, that is, meaning the newsprint machines, than any other kind. You called my attention to this testimony this morning. Is there any modification you wish to make in reference to that?

Mr. Lyman: Where is that?

Mr. Paul: It is on page 87 of Mr. Davis' testimony.

Q172. I call your attention particularly to question 66 of the direct examination. A. What I intended to convey was this: That while the Pusey & Jones Company built a great number of paper machines in the year, and a considerable portion of those machines were news machines, I wanted to say that, in our opinion, the Pusey & Jones Company built considerably more news machines than any other builder. We always had the idea that we built as many news machines at Pusey & Jones for fast speeds as all the rest of the paper-machine builders combined.

Q173. You didn't mean they built more news machines at Pusey & Jones than they did of other kinds of machines? A. No, I didn't want to convey that idea.

Mr. Paul: That is all.

CROSS EXAMINATION.

By Mr. Lyman:

XQ174. In the letter which you wrote on November 24, 1911, to the Bayless Pulp & Paper Company, which is referred to in your direct examination, you say, on page 2: "End post supporting one end of shake and stationary rail is old style. Should be our new style with piece to which shake rail is bolted working on a through pin, so that when breast-roll end is raised and lowered the end of the rail will not pinch and bind, which causes wear, and transmits the shaking action to the suction boxes." Do you know when that new style supporting post was adopted? A. It was, I think, prior to the time that I went to the Horne Company. It was prior to 1910.

XQ175. What was the trouble with the old style supporting post? A. The shake rail was carried, at that end, on a vertical pin. There was a hole in the shake rail fitting over that vertical pin which would allow it to shake horizontally; but when they adjusted it, that hole, you see, would bind on that pin.

XQ176. Well, did that prevent any substantial vertical adjustment of the breast-roll? A. No.

XQ177. How was the binding avoided in the old style? A. By making the hole too big for the pin.

XQ178. That was done, was it? A. Yes, that was done. It was quite a crude way of doing it but they did it.

XQ179. You also say on the same page of the letter: "The suction box bottom frames are old style with cast location spaces for boxes. Should be our present style with slotted top so that location of boxes can be changed to suit conditions."

XQ180. When was that new style of suction box bottom frames adopted,—do you know? A. That was prior to my going with the company; it was prior to 1910.

XQ181. What did you mean by saying that the new style allowed the location of the boxes to be changed to suit conditions? A. If that suction box space was made, for instance, for five boxes, 2 before and 3 after the dandy, if they wanted to take out a box they could space their other boxes to suit. In the old style they had depressions cast in the bottom frame casting underneath the suction box so that that was fixed,—the locations of the suction boxes with the old frames were fixed; but in the new style frames it was a straight top with a "T" slot cast in the top, and they could slide the box along and locate them any place they wanted to.

XQ182. Did that new style frame permit elevating the suction boxes so as to make them share in the pitch that you gave to the wire when the breast-roll was elevated? A. No. In any style frame, the top of the suction box cover would be forced up against the under side of the stationary rail, so that the pitch of the stationary rail would determine the pitch of the suction boxes.

XQ183. You say that, at the present time, the machines made by the Horne Company provide for an adjustment of the suction boxes so that they share in the elevation of the wire. I understand your testimony to be to that effect. Is that correct? A. What I meant to say was, in arranging for the elevation of the breast-roll end, we take the line of the highest elevation from the top of the breast-roll to the top of the guide roll and set the stationary rail on that highest elevation, and then when you drop the breast-roll end it breaks, of course, at the—

XQ184. And when did that practice begin with the Horne Company? A. That was in vogue when I went there. I don't know how much before that.

XQ185. You went there in 1910? A. In 1910.

XQ186. That arrangement was not in use on the machines that you examined at the Bayless Company? A. No.

XQ187. On that machine, the suction boxes were on a dead level? A. The frames were made of proper height so they would be on a dead level; but when they were blocked or not I could not say.

XQ188. Did the horizontal compensating springs that were supplied with the new equipment have anything to do with the adjustment of the breast-roll? A. Not at all.

XQ189. You say, in this same letter of November 24, 1911, at page 3: "There should also be a new shake head, of our latest design with connecting rod, and new attachment to 'U' frame, to keep the connecting rod in horizontal position when pitch is varied, and also to keep the Fourdrinier part in central position." What was the reason for that requirement? A. That was a later development over the old style shake head. The connecting rod in the old arrangement was attached right to the "U" frame from the eccentric or the crank of the shake head. When you raised the "U" frame, this being a fixed position on one end and a fixed position on the other, it would pull the Fourdrinier part over that amount. Later, we got up an attachment where the machine end of the connecting rod was attached to a sliding member so that as the "U" frame went up and down the connecting rod always remained in that horizontal position and did not pull the Fourdrinier part to one side.

XQ190. When did you get up that later development? A. That was done before I went there.

XQ191. Now, was the previous arrangement sufficiently flexible so as to allow any substantial movement of the breast-roll end of the machine as a practical matter? A. Oh, yes. It wasn't mechanical; that was all.

XQ192. In this same letter you say, at page 4: "The present adjusting arrangement for raising and lowering the breast-roll end of the Fourdrinier frame works very stiff and should be thoroughly cleaned and oiled. If you intend to make both sulphite and sulphate papers on this machine you should have this adjusting arrangement in good working order, so that the pitch of the wire can be easily and quickly changed." What did the question of whether the owner of the machine intended to make both sulphite and sulphate papers on the machine have to do with the matter of raising or lowering the

breast-roll end? A. Making sulphite papers, which are made from sulphite stock, which is a free stock, they would want a greater pitch at the breast-roll than when making kraft papers, which are made out of sulphate stock, which is a slow stock.

XQ193. It was to provide for dealing with different grades of stock that this adjustment was provided? A. Yes, to get a greater pitch.

XQ194. Greater pitch with freer stock? A. Freer stock.

XQ195. Lesser pitch with slow stock? A. Slow stock.

XQ196. Or a pitch uphill with slow stock? A. Yes. I noticed in examining the machine that the screw was rusty on top, and the men said it was hard to adjust. When they were raising the breast-roll end it required a good bit of muscle to get it up, and I simply called their attention to it,—that they ought to keep it lubricated in order to make it easier for the men to adjust the breast-roll end.

XQ197. If I remember correctly, you stated that the two supporting posts for the breast-roll end of the machine were replaced by new ones? A. Yes, in order to permit us to attach those horizontal compensating springs.

XQ198. What arrangement was provided on that Bayless machine for adjusting the apron or flow box to correspond to different elevations of the breast-roll? A. What we called a hinged apron.

XQ199. That was on the original machine before the changes were made? A. Yes.

XQ200. And were any changes made in that at the time of the repair? A. No changes made in the apron or flow box at all.

XQ201. Where was the apron hinged? A. One part was attached to the flow box and a few inches out there was a hinge put on so that the outer end which went up to the breast-roll could rise or lower to follow the pitch of the wire,—like that (indicating).

XQ202. And could that be raised or lowered to any particular extent or was there any limit in the amount that could be raised or lowered? A. No. You could raise or lower it ten inches all together,—any that I ever saw, you could.

XQ203. When you raised the breast-roll on that machine, what was necessary to be done by way of raising or lowering the flow box itself,—anything? A. There was no arrangement made for raising or lowering the flow box, that I know of.

XQ204. How much could you practically raise that breast-roll without changing the flow box or building it up at all? A.

Why, I should think you could get an adjustment of 10 inches; that is, from a low point to a high point.

XQ205. Wouldn't your flow box be overflowed if you did that? A. No.

XQ206. Wouldn't you have to build up the side walls of the flow box or raise up the flow box bodily? A. No.

XQ207. Did you say that the other machines of the Pusey & Jones Company like the "Defender" machine reached 500 feet in practice? A. Yes.

XQ208. Where were they put in? A. Put in the Hudson River Mill.

XQ209. Of what company? A. That was the Hudson River Pulp & Paper Company at that time; it is International Paper Company now. The same type of machine was at the Willamette Pulp & Paper Company of Oregon City, Oregon. In fact, everything of the news type that was built after the "Defender" machine was built along the "Defender" lines.

XQ210. Can you name any other machines that went up to 500 feet per minute than those two you have mentioned, of the "Defender" type? A. Oh, I wouldn't attempt to recall them.

XQ211. Did those machines make that speed consistently? A. Yes.

XQ212. Which machine of the Willamette Pulp & Paper Company was it that you referred to of the "Defender" type? A. I think it was the 115-inch. That was the widest machine in the world at that time.

XQ213. When was that put in? A. It was prior to 1900, but I wouldn't set a positive date for it.

XQ214. Was that the only Pusey & Jones machine that was put in at the Willamette plant, do you know? A. No. I think there was a very old one before that. I wasn't familiar with it. I wouldn't say positively that there was any other.

XQ215. Do you remember a machine that was put in by the Pusey & Jones Company for the St. Croix Paper Company? A. Yes.

XQ216. When was that put in? A. About 1905, I think.

XQ217. And that embodied the "New Century" device? A. Yes.

XQ218. And was that in all respects the same as the other "New Century" machines? A. In all respects, yes.

XQ219. It was supposed to be the fastest machine in the world, was it? A. Yes.

XQ220. What was the adjustment provided for the breast roll on that machine? A. That was the regular adjustment which is on the "New Century" shake; I think about 5 inches.

XQ221. That is, a total adjustment of 5 inches? A. Yes.

XQ222. So a portion was below level and a portion above level? A. Not necessarily.

XQ223. Well, as a matter of fact, how was it put in? A. I can't say positively, but in the news machine we didn't make any arrangement for adjusting below the horizontal line; it was brought above the horizontal line.

XQ224. Would you be quite sure of that? A. Yes.

XQ225. And the fact would be the same with reference to all the other machines as it was with reference to the St. Croix machine? A. News machine.

XQ226. News machine? A. Yes.

XQ227. There were two such machines, were there not? A. Yes.

XQ228. I have here what purports to be an agreement between Pusey & Jones Company and the St. Croix Paper Company and the specification for these two machines, and I ask you to look at it and see whether you can identify it as such (handing papers to witness). A. Yes.

XQ229. And in these specifications I find this provision: "The Pusey & Jones Company's patented 'New Century' shake frame for the Fourdrinier part, with frame supports, cantilever set frames, with adjusting device for raising and lowering the breast roll end of Fourdrinier part above and below the horizontal point, and registering scale for determining the amount of pitch of the wire"—and I find no other provision in the contract with reference to adjustment. Is that correct? A. That was a copy of the usual specification which they wrote for every paper machine; but, to the best of my knowledge and belief, we never arranged a newspaper machine to be pitched up hill. We always took a given point, whether that was a horizontal point or some other point, and arranged the screws so that it could be adjusted above or below that given point; but it wasn't necessarily a horizontal point. That was the usual type of specification which they got out for any type of machine.

XQ230. Are you prepared to say as to these St. Croix machines definitely that the adjustment that was provided on those machines when they were supplied was not such that the breast roll might be raised above level or depressed below the level? A. I am not prepared to say.

XQ231. Are you prepared to make that definite statement with reference to any other machine of the "New Century" type? A. I wouldn't depend on my memory so much as that.

XQ232. Then, as at present advised, all you can say about

this "New Century" type machine put out by the Pusey & Jones Company is that they have an adjusting mechanism which, all told, allowed a movement of the breast roll of five inches? A. About five inches. I wouldn't say definitely. It may have been a little more than that or it may have been a little less than that; it was about five inches.

XQ233. And that would include whatever adjustment there was above the level and whatever adjustment there was below the level? A. Yes.

XQ234. At what speed were those St. Croix machines designed to run? A. We were talking at that time of 550 to 575.

XQ235. And did they maintain that speed? A. They maintained a speed of 550 because I counted it at one time when I was at the mill, and I understood that they ran higher than that but I didn't see them running faster than 550.

XQ236. When those machines were put in they were the fastest machines in the world? A. Supposed to be.

XQ237. Now this contract is April 11, 1905. A. I thought it was in 1905.

XQ238. And were the machines put in in the subsequent year, 1906? A. I think it is entirely possible that they were put in the latter part of 1905.

XQ239. But you don't remember? A. I don't remember.

XQ240. When was it that you counted those speeds? A. It was some time during the latter part of 1906, I think.

XQ241. At the time that you counted those speeds had there been blocking put under the breast roll ends of those machines? A. I can't say definitely, but I don't think there were.

XQ242. There was blocking put in later? A. Later I understand so; I never saw it.

XQ243. You never saw it with the blocking put in? A. No. I am so sure that the speed was 550 because I wanted to get that information before I went to Europe. I was going to Europe the following year.

XQ244. When did you go to Europe? A. In 1907.

XQ245. When you left the Pusey & Jones Company, had that company begun to build machines with high pitches of the wire? A. No, they didn't build the machines with the high pitches. They built a standard machine and told the mill owner they could block them up if they wanted to.

XQ246. Because the Pusey & Jones Company didn't care to take any responsibility? A. Didn't care to assume the responsibility. Let the other fellow do it.

XQ247. With reference to possible patent suits? A. Yes,

sir.

XQ248. Do you know when the practice of putting in high pitches under the wires by blocking began? A. I wouldn't attempt to say.

XQ249. Did you ever visit the mills of the Berlin Paper Company in order to see the pitch on the wire of those machines? A. No.

XQ250. Is it the Berlin Paper Company? A. It is Berlin Mills Company now—no. No; it is the Berlin Mills of the International Paper Company, the Glen Mill, at Berlin, New Hampshire.

XQ251. Do you remember how it was that you first got information of a high pitch being put under the Fourdrinier end of the paper making machine? A. I couldn't tell you the first time I heard of it. It was simply paper makers coming into the office and telling about it.

XQ252. And what machines did they tell you were blocked up? A. I couldn't tell you.

XQ253. Did you hear about the Berlin Mills being blocked up that way with a high pitch? A. I don't remember.

XQ254. Do you remember coming to Boston to see Mr. Buchanan of Stone & Webster with reference to the Eibel process on the first of March, 1907? A. I really don't.

XQ255. Do you know Mr. Buchanan? A. No, I don't.

XQ256. Do you remember making a visit to Stone & Webster to inquire into the Eibel patent? A. In 1907?

XQ257. Yes. A. Yes, it is entirely possible I did.

XQ258. I am informed that you did make such a visit to Mr. Buchanan about March 1, 1907, and that you told him that you had heard about the pitch used at the Berlin mills. Do you remember that? A. I really don't.

XQ259. You do remember making such a visit? A. I remember now making a visit to Stone & Webster's office.

XQ260. For the purpose of inquiring into the Eibel process? A. For the purpose of inquiring something about the Eibel process, but I couldn't tell the first thing about the conversation.

XQ261. Does it refresh your recollection if I suggest that one thing that you particularly discussed with Mr. Buchanan was the advantages of the Eibel process in the way of the added drainage that it allowed; that is, didn't you say that a strong point in favor of the Eibel invention was that the water drained from the wire more quickly when the stock was running at the speed of the wire under the influence of the downward pitch on the wire than when the stock was running at a different

speed from the wire? A. I declare I don't remember the first thing about the conversation.

XQ262. What led you to make that visit to Stone & Webster? A. I haven't the slightest idea.

XQ263. Do you remember about where it was that you first heard about Eibel's invention or how it came to your notice? A. I can't tell you that.

XQ264. It was probably about the same time that you made the visit to Stone & Webster? A. Possibly so.

XQ265. And that was early in 1907? A. Well, it must have been very early in 1907 because I went to Europe in 1907 and stayed there for seven months.

XQ266. Well, it was about that time, presumably that you heard that Eibel had given a high pitch to his wires at the Rhinelander Paper Company? A. I presume so.

XQ267. And that was generally reported around in the business, was it? A. Oh, yes. I suppose, like all new things, it goes like wildfire when it once gets started.

XQ268. And do you remember what were some of the mills that you heard of installing that pitch at about that time? (A pause). A. I can't recall the object of that visit to Stone & Webster.

XQ269. I am informed that you told Mr. Buchanan of Stone & Webster at that interview that you had heard very favorable reports of the process. Is that probably correct—of the Eibel process? A. I wouldn't care to say, because I don't remember.

XQ270. Do you remember how the idea impressed you when you did first hear of it, whether favorably or otherwise? A. Why, I presume it impressed me rather favorably, because it is the natural evolution of the Fourdrinier part.

XQ271. You regard the high pitch on the Fourdrinier wire as a good thing in news machines or other fast running machines? A. A reasonable pitch, I think, is a good thing, yes, but I don't think a very high pitch has very decided advantage.

XQ272. What do you mean by a "reasonable pitch" in that connection? A. I think you can make just about as good paper at a 6 or 8-inch elevation as you can at an 18-inch elevation.

XQ273. What is the advantage of using a substantial pitch in making news paper? A. Simply to get rid of an abnormally high slice. You get the same result by putting on a slice to get the increased flow of stock under the slice.

XQ274. Why is the pitch as a method of getting that speed of stock on the wire preferable to an abnormally high slice? A. It doesn't require to shake a large body of water.

XQ275. And the large body of water resting upon the wire

is a practical advantage? A. It was in those days. In these days it wouldn't be so bad because the slice is put back over the center of the breast roll. In those days it was carried forward several table rolls. Under present day practice it wouldn't be such a serious disadvantage to have the high slice.

XQ276. I am also informed that, at that interview with Mr. Buchanan you said that you were very sure that no one until very recently had run machines at anything like the Eibel pitch. Do you recall that? A. I don't recall it, but I think it is entirely possible I said that. My recollection is that when the Eibel process patent was first brought to our attention it was stated the pitch was about 12 inches. It is entirely possible that I said, up until Eibel tried it, machines had not been run at a 12-inch pitch; that they never built machines for that amount of pitch, I am quite sure.

XQ277. When did the practice of purchasers of Pusey & Jones machines of putting substantial pitches on to the wire begin? A. After the "New Century" shake was patented, about 1903.

XQ278. What pitches were being used by purchasers and users of Pusey & Jones machines for news manufacture at the time you left Pusey & Jones, in 1910? A. They were building the "New Century" shake then, which, as I say, would take them about 5 inches above the horizontal line.

XQ279. At that time, wasn't it customary for users of the Pusey & Jones machines to put blocking under the Fourdrinier? A. I understand some of them did.

XQ280. Well, wasn't it the usual thing? A. I can't say as to that. I know that some of them did do it, but whether it was done or not I couldn't say.

XQ281. What pitches did those to whom that statement applies obtain by blocking under the breast roll end? A. The St. Croix blocked up to about 12 inches.

XQ282. The others? A. About the same.

XQ283. Those others included Willamette? A. Well, I didn't see any blocking pieces under the Willamette machine.

XQ284. Included the Hudson River Pulp & Paper Company—or what was that name? A. Hudson River Pulp & Paper Company.

XQ285. Hudson River Pulp & Paper machines? A. Later they did, I understand; but when I saw the 90-inch machine it had no blocking pieces under it.

XQ286. When was that? A. That was prior to 1900.

XQ287. Have you seen that machine since? A. No. I haven't seen it since they put blocking pieces under it.

XQ288. I have here what purports to be a copy of a letter— A. Just a minute. Let me think a minute. I will have to modify that a little. There was one machine down there, whether it was the Glen Falls mills or the Hudson mill, that did have 3-inch blocking pieces under it.

XQ289. (By Mr. Paul): Would you say when that was— the time you are referring to? A. Yes. That was prior to the "New Century" shake; that is merely a statement; I couldn't swear to it.

XQ290. (By Mr. Lyman): Is it a fact that the use of the high pitch on the news machines has, among other advantages, the advantage that it facilitates the drainage of the stock on the wire when the proper relation is maintained between the pitch and the speed of the wire? A. Do you mean by drainage that it permits the water to leave the stock more readily?

XQ291. Yes. A. I should assume that it would.

XQ292. Why? A. The water is removed from the stock by capillary attraction. Every contact of the table roll on the wire takes away a little water, and if the water was going at the same speed as the wire, I should think that it would drain more readily. But I don't think that that was the only reason for elevating the breast roll end.

XQ293. What was the main reason for elevating the breast roll end? A. To permit the proper formation of the stock on the wire.

XQ294. At the same time increasing the speed of the wire? A. That, with the lengthening of the wire and the addition of suction boxes, etc., permitted increasing the speed.

XQ295. It is a fact, is it not, that the practice of putting a high pitch on the wire on news machines has in fact resulted in large increases in speed of paper machines generally? A. It is a fact that the speed of the paper machines has increased since the wires were lengthened, and at the increased speeds the elevation was increased. But I think there was more real advance in speeds of machines up to the time that the Eibel patent came out than there has been since. It is my personal opinion on it. That is, we had paper machines running at 550 to 575 feet a minute and you couldn't get more than 5 inches elevation on the breast roll then, and that meant that there was an increase of from 100 feet to 550 or 575 feet at that stage of the game. And since that there has only been an increase of about 100 feet a minute.

Mr. Lyman: I shall have to object to that answer as not responsive to the question.

Mr. Paul: I think the answer is responsive.

XQ296. Whatever may be the fact as to whether other factors have contributed to increases of speed or not, isn't it a fact that that practice of putting high pitches on the wire has made possible large increases in speed on news machines? A. What do you mean by large elevations? Abnormal elevations of 12 and 18 inches?

XQ297. Well, I will let you define it. A. I don't think it has been the cause for any such large increase in speed as I referred to in answer to the other question.

XQ298. Now, I will ask you what you mean by "large" in that answer. A. I said before that the natural evolution of the Fourdrinier part took it up to 5 inches above the horizontal point and at that elevation machines were running 550. Now, when they take it up to 12 or 18 inches above to increase it to 650, I wouldn't call that a large increase.

XQ299. You wouldn't? A. I wouldn't call that a large increase as compared with the natural evolution of the machine, which started at about 100 feet a minute and went to 550 feet a minute.

XQ300. Then, as I understand you, what we are arguing about is whether an increase of speed from 550 to 650 feet can be called a large increase, is it not? A. In one sense, yes.

XQ301. But it is fair to say that the high pitches have increased the possible speeds of such machines say 100 feet per minute? A. I am not ready to say that the machines couldn't reach 650 with only 6 inches elevation on them. It would take a paper maker to say that, because I really think that I can build a machine to run 650 with that 6-inch elevation.

XQ302. Would you call that a high elevation? A. No; and that doesn't any way nearly approximate the natural gravity flow of the stock down that incline.

XQ303. You never saw the St. Croix machines after they had been blocked up? A. No.

XQ304. Have you any blue prints or drawings of the "New Century" shake? A. No, not now. They would be down at the Pusey & Jones Company's office. Oh, there is a drawing in the patent paper, which I believe is in this office.

XQ305. (By Mr. Paul): The Savery patent? A. The Savery patent, yes.

XQ306. That I showed you Saturday? A. Yes.

XQ307. (By Mr. Lyman): I have here what purports to be a copy of a letter from Pusey & Jones Company to the Rhinelander Paper Company, dated February 20, 1907, and ask you if you ever saw that letter (handing paper to witness)—the original of that letter? A. I couldn't recognize that very well

because it was evidently written by Mr. Savery, who was the president of the company at that time. It is initiated "T. H. S." which are Mr. Savery's initials.

XQ308. That purports to give a description of the "New Century" shake? A. A brief one, yes.

XQ309. And is it an accurate description of it? A. Well, he says they can get an adjustment of 4 inches "and in some cases where additional adjustment is desired, it is possible to increase this amount," which they did at times by putting on longer screws.

XQ310. Starting with the passage to which you refer, it is: "We will enclose herewith blue print from drawing No. 241, #31, showing elevation additions of the 'New Century Shake' and would call your attention to the fact that the shake roll from B to C has an adjustment of 4 inches. In other words, the breast roll can be raised 2 inches above a level line, or lowered 2 inches below said line. In some cases where additional adjustment is desired, it is possible to increase this amount." I am quoting correctly? A. Oh, yes, that is quoted correctly.

XQ311. And wouldn't that statement made by the president of the company contemporaneously in 1907 be more likely to be an accurate description of the "New Century" shake and of the mechanism there than your recollection ten to fifteen years later? A. I think that is entirely right.

XQ312. Now, in those "New Century" machines the suction boxes were stationary and could not be adjusted? A. Yes.

XQ313. And were the suction boxes placed on a level in those machines? I am referring now to periods before 1907. A. No. The stationary rail was placed on an angle.

XQ314. Can you tell us some machine in which that was true? A. I think I am safe in saying all of them.

XQ315. St. Croix included? A. I think so.

XQ316. If it was true of any machine, it was true of the St. Croix Paper Company. I have in mind that your recollection may be at fault in view of the lapse of time and that you may be thinking of machines that have been more recently put out by Pusey & Jones? A. I think the stationary rails were all made on a pitch, because I believe the patent drawing, which was taken from the first machine they built, was shown on a pitch; that is, for the stationary rails.

XQ317. I call your attention to the patent drawing and ask if the stationary rail and the suction boxes are there shown as on an inclination or on the level? (The witness examines the drawing.) A. No, it is evidently drawn on a level.

XQ318. Well, the fact seems to be that the practice of giving

a permanent inclination to the rail carrying the suction boxes originated at some later time? A. Evidently so.

XQ319. And are you able, upon reflection, to say when that practice originated? A. I am not, because it was my impression it started with the "New Century" shake.

XQ320. So that your testimony in that respect will have to be corrected? A. If I did testify to that, yes.

XQ321. Now, are you familiar with the machines put in by the Pusey & Jones Company at the Minnesota & Ontario Power Company's plant? A. Yes.

XQ322. Did you put those machines in? A. Why, I took the order for them.

XQ323. Did they have the "New Century" shake? A. Yes.

XQ324. As put in, were those machines given the same arrangement of adjustment that the other "New Century" shake machines had? A. I assume so.

XQ325. It has been testified in this case by Mr. Barlow, an engineer of the Minnesota & Ontario Power Company, that those machines as supplied originally had an adjustment whereby the breast roll could be dropped three inches below the level or raised three inches above the level. In view of that fact, aren't you in error in the statement which you made that, in putting in those machines, the Pusey & Jones Company always arranged them so that the whole adjustment was above the level? A. I meant that my impression was that they took a mean elevation and not the horizontal point, and that the adjustment was above and below the mean elevation, and not above and below a horizontal point. That is my impression of it.

XQ326. But, in view of Mr. Barlow's statement, you would modify that statement of yours, wouldn't you? A. I won't modify my statement for anybody else's statements, no.

XQ327. Perhaps that isn't a fair question to ask. A. Absolutely not.

XQ328. In all events, the practice followed in the Minnesota & Ontario case was the same practice as was followed in other machines of the Pusey & Jones Company? A. I can't say as to that because the same practices did not obtain at that time. It was under the new arrangement, and when we got an order for a paper machine it was passed over to the engineering department and the sales department forgot it. In the olden times, I could say something about it.

XQ329. What did you mean by adjusting the wire to mean position? A. I mean by that that we would take the highest elevation of the breast roll and run a straight line from the top of the breast roll to the top of the guide roll, and take half of

the elevation possible on the Fourdrinier part and call that point the mean elevation, and go down from that mean elevation and up from it to the high point so that the wire wouldn't what we term "belly" at the suction boxes.

XQ330. What about the Finch, Pruyn & Company machines that Pusey & Jones put in; what was the adjustment on those machines of the breast roll end? A. To the best of my knowledge and belief, the same as the Minnesota.

XQ331. Adjustment above the level or adjustment below the level, or all the adjustment above the level? A. I don't recognize any adjustment below the level on a news machine.

XQ332. How about the Crocker-Burbank machine? A. That is a different proposition; that was book paper.

XQ333. What was the situation with reference to those machines? A. I can't say for sure, but it is possible that we arranged for an adjustment below the level on those machines.

XQ334. I show you the Savery patent, No. 675,072, which shows a form of adjusting mechanism which is, as I understand your testimony, the type of adjusting mechanism that was used on the "Defender" machines; is that right? A. No. The "Defender" machine has the old style Savery shake on it; it didn't have the "New Century" shake.

XQ335. This patent No. 675,072 shows the "New Century" shake? A. Yes. This is the "New Century" shake. The "Defender" machine was the old style shake, which only had an adjustment by means of slotted holes in the table bars.

XQ336. This patent states the purpose of the adjustment in the following language, at page 1, lines 75 to 80 of the patent: "It is desirable, furthermore, to provide for a vertical adjustment of the breast roll end of the shaking section so that this section may lie in a horizontal plane or above or below such plane, according to the stock which is being handled and the character of the product desired." That is an accurate statement of the purpose of these adjustments? A. Yes.

XQ337. Such as were used in the "New Century" machines that you have been telling about? A. Such as could be used in the "New Century" machines.

XQ338. This shows the adjustment that was used? A. That shows the type of adjustment, yes. But, as I said before, it wasn't at all necessary to go below the horizontal line in building the machine.

Mr. Lyman: I ask that the Savery patent referred to, No. 675,072, be marked for identification.

(Counsel for defendant produces a copy of said patent, which is marked, in accordance with the request of counsel for plain-

tiff, as "Defendant's Exhibit B-1.")

XQ339. What was the difference in the matter of adjustment, if any, between the mechanism shown in this Savery patent, 742,239, that you previously referred to, and that shown in Savery patent No. 675,072? (The witness examines said patents.) A. The adjustment is practically the same in both of these; but neither of these types was used on what we knew at that time as the "Defender" machine.

XQ340. No. Those are the "New Century" type. A. Those are the "New Century" type.

XQ341. (By Mr. Paul): Both of them? A. Yes, the "New Century" had the vertical supporting springs; the old style type were supported on pins.

XQ342. (By Mr. Lyman): How long would it take to remove the blocking under those Minnesota & Ontario machines to put them on a level? A. You could do it over Sunday.

XQ343. You put in machines for the Willamette Pulp & Paper Company in 1906, didn't you? A. I don't think we did, in 1906.

XQ344. The last machine you put in for the Willamette Pulp & Paper Company was the machine of the "Defender" type, before 1900, was it? A. I think so. The reason I said that, we had a talking point in the sales department prior to 1900 of four machines that were making 500 feet a minute or more, and one of those was the Hudson River, and one the Glens Falls, and one the Berlin mills, and one the Willamette. Those were the machines we referred to particularly.

XQ345. Now, talking about those four machines, it is true isn't it, that every one of them, subsequent to the date of Eibel's patent, put in blocking under the breast roll ends so as to get a high elevation of the breast roll? A. I couldn't say that positively.

XQ346. Is that your understanding? A. My understanding is that one of those machines down there, either the Hudson River or the Glens Falls machine, did block up about 3 inches.

XQ347. You know that the Berlin mills subsequent to the Eibel invention put in a high blocking underneath its breast roll, don't you? A. I wouldn't say it was a high blocking. They did put in blocking pieces under the breast roll.

XQ348. Do you know how much? A. I couldn't say.

XQ349. About how much? A. I couldn't say, because I didn't see it.

XQ350. That was the Glenn mill of the International Paper Company? A. At Berlin, New Hampshire.

XQ351. Yes. A. Yes.

XQ352. And the Hudson River Pulp & Paper Company? A. That is at Palmer, New York.

XQ353. And that is owned by the International Paper Company at the present time? A. Yes.

XQ354. And the Willamette machine was owned by the Willamette Paper & Pulp Company? A. And is now—

XQ355. Which is now the Crown-Willamette? A. Crown Willamette.

XQ356. And the one at Palmers Falls? A. That was Glens Falls.

XQ357. What was the fourth? A. Glens Falls.

XQ358. What about the one at Glens Falls; who owns that? A. International.

XQ359. International Paper Company? A. Yes.

XQ360. You have no information about it? A. No definite information.

XQ361. As I understand you, those machines had no adjustment, practically no adjustment possible at the breast roll end? A. Very little.

XQ362. Can you tell us any one machine put in by the Pusey & Jones Company before 1907 as to which you would be willing to swear that there was an adjustment above the level of the breast roll of 5 inches? If so, please name it? A. I could only say it is my impression that the news machines were made the way we wanted them made.

XQ363. No. I want to know some definite machine that you are willing to bank on? A. Was made so that you could adjust it 5 inches above the level?

XQ364. Made so you could raise the breast roll 5 inches above the level. A. I wouldn't swear to it definitely, no; only say that that was the way we wanted them made. We never measured up the machines after they were erected.

XQ365. You say that the St. Croix machines ran, before there was any blocking under them, at 550 feet a minute? A. Yes.

XQ366. And you know that, subsequently, blocking was put under the breast roll which gave a substantial elevation to the breast roll. What is your theory as to the reason why the St. Croix people wanted or might have wanted to put blocking under those machines? A. I can only answer that by saying that everybody was doing it and I suppose they followed the crowd.

XQ367. You think they did with their eyes shut? A. You will have to ask Mr. Hosford that. He was the president of the plant.

XQ368. Well, what about the quality of paper that they were making at 550 feet without any blocking under the breast roll; did that leave something to be desired? A. We thought it was a good sheet of news paper. We had samples of it.

XQ369. Probably capable of improvement, though, wasn't it? A. Any sheet of paper is capable of improvement.

XQ370. What I am getting at is, isn't it possible that the reason why these people wanted the blocking was that they could, by that means, by giving a substantial pitch to the wire, get a better formation than they were getting previously—a better sheet? A. Well, that would simply be an assumption on my part, and they could answer that better than I could.

XQ371. What you can, perhaps, give your opinion on is whether the paper they made, these people were making at 500 or 550 feet with a level wire, or substantially level wire, was as good paper as was made by other machines running at slower speeds, or whether there was a certain wildness or tendency towards wildness in it, that might well have given the manufacturers operating the machines reason for doing something to improve it? A. Well, the quality of stock would have as much to do with that as the speed of the machine—increasing the strength of the paper, put it.

XQ372. Well, as to the bare fact about the paper that they were making, was there some tendency towards wildness in it at those speeds? A. I don't remember that.

XQ373. You don't remember whether that was so or not? A. I know that we considered the St. Croix samples a good sample of paper, because I took them to Europe with me to sell a couple of ne s machines, and they were running at 550.

XQ374. Did they have to take special pains with their stock, do you know? A. No, I don't know about that. I was never in their pulp mill in my life.

Mr. Lyman: That is all.

RE-DIRECT EXAMINATION.

By Mr. Paul:

RDQ375. I wish you would explain a little more in detail, Mr. Davis, just what you mean about these machines having a capability of adjustment of 5 inches and your practice of setting that adjustment on the different machines. Do I understand that you could get all of your adjustment above the level, or all below the level, or divide it between the two? A. Why, yes. On a book machine, for instance, it was desirable to go below the horizontal line and, as I said before, we would take the highest elevation and make a line from the top of the breast roll to the top of the guide roll, and then we would take half that

adjustment and that half would represent the mean, and then they would go below that; and on a book machine it would mean it would be going up hill at some certain point below that and be going down hill at its highest elevation; on a news machine it wasn't necessary to go up hill; therefore, they would take the highest elevation and describe the line, and then the mean elevation would be half the adjustment, and by the time they had got down to the full length of the screw it would be on a horizontal line. That was the intention. In fact, we never put a rule on those machines after they were built, but that was the intention in building them.

RDQ376. So the plan of setting up the news machines was to have them adjustable from a level position as high above as the screw would carry them? A. That was the intention.

RDQ377. And it is your recollection it was about 5 inches? A. That is my recollection, yes.

RDQ378. Now, these machines that you have spoken about of the Minnesota & Ontario Power Company, if those are constructed so that they could have an adjustment of 3 inches below the level and 3 inches above, could they be set so that the whole adjustment would be from the level up, without changing the mechanism? A. They could by means of blocking pieces.

RDQ379. No, I mean by the screws themselves. A. The screws themselves?

RDQ380. If these screws are capable of going 3 inches below and 3 inches above, can you set them so that the entire adjustment will be from the horizontal up? I understood you to say that you could do it. A. Yes, you could do it.

RDQ381. So that these adjusting mechanisms, then, as I understand you, were so made that the entire movement could be either entirely above the level or entirely below the level, or you could divide it between the two in any way you want it; is that right? A. That is right.

RDQ382. Now, did you ever see any of those Pusey & Jones machines that were running on news below the level—running so the wire ran up hill? A. No.

RDQ383. Why was it that, when you went to Europe in 1907, you wanted this information in reference to the speed of the St. Croix machines before going? A. Because the English builders had not maintained a speed of more than about 400 feet at the time, and I assumed that Lloyd would want to buy machines that could run at high speeds and I wanted to have something tangible to talk about when I got over there as to high speeds.

RDQ384. And what representation did you make about

speeds? A. Well, I told Mr. Lloyd that we had machines running at 550 feet a minute. He called it a Yankee story, and I told him that he was a betting man—he would bet on the Henley races and some other things—and if he wanted to take the time of taking a trip with me to St. Croix we would go over there and see the machines running, and if we didn't find them running at 550 feet I would pay his expenses over there and back again and I think it was $50 a day for each day he was away, and if we did find them running at 550 he would pay my expenses over and back and give me an order for two machines.

RDQ385. So you feel confident you had seen them running at 550 before you went over there? A. Yes, or I wouldn't have made that statement.

RDQ386. You remember making that statement? A. I remember making that statement.

RDQ387. You spoke of seeing a machine somewhere that had a 3-inch blocking. I think it was either Glens Falls or Hudson River. A. Either at the Palmer mill or the Glens Falls mill.

RDQ388. Where was that blocking? A. It was under the post at the breast roll end; on the smaller one, under the intermediate post.

RDQ389. Can you say how early that was? A. I can't say.

RDQ390. Was it before the date of this "New Century" adjustment? A. Oh, yes, before 1903.

RDQ391. You know it was before 1903? A. Oh, yes, I know it was before 1903.

RDQ392. Now, you have been asked considerable about a visit to Stone & Webster and seeing Mr. Buchanan and there was some talk about the matter off the record. Can you recall any such visit? A. I can dimly recollect going to Stone & Webster's office. I was never in their office but once. What the visit was for or what the talk was about I can't say.

RDQ393. You don't recall any such conversation as has been suggested? A. I don't recall any such conversation. If I could I would be very glad to say so.

RDQ394. This purported copy of a letter from the Pusey & Jones Company to the Rhinelander Paper Company, referring to the "New Century" shake and stating that the breast roll can be raised two inches above the level or lowered two inches below the level—is that at all in conflict with the testimony that the adjustment might be entirely above the level? A. I don't consider it so.

RDQ395. That related merely to the way in which the adjustment is set when the machine was put up? A. Absolutely.

RDQ396. You were asked how long it would require to take

the blocking out from under those Minnesota & Ontario machines to bring the posts down on to a level. What did you take into consideration? A. I took simply the blocking pieces under the Fourdrinier. I was asked how long it would take to get the blocking pieces out from under the Fourdrinier posts, and I said you could do it over Sunday.

RDQ397. That is all you took into consideration? A. Why, surely; that is all I was asked.

(Counsel for the defendant reserves the right to object to the copy of the letter from the Pusey & Jones Company to the Rhinelander Paper Company, dated February 20, 1907, on the ground that it does not purport to be an original letter, and requests that counsel for the plaintiff produce the original letter for comparison and, if the copy is found to be correct, no objection will be made to the use of the copy in evidence.)

Mr. Lyman: I ask that the copy be marked for identification.

(Said copy of letter is marked "X-1, R. J. M.")

RDQ398. Do I understand you to say that both of the Savery patents that were shown you, the patent of 1901, No. 675,072, and the patent of 1903, No. 742,239, both relate to the "New Century" shake construction? A. The latter one refers to the support for the deckle frame; the first one refers to the "New Century" shake.

RDQ399. Well, does the second one show the same shake? A. Yes.

RDQ400. The same adjusting device? A. Yes.

RDQ401. Well, then, when you spoke Saturday of the patent of 1903 as fixing the date of the "New Century" you had overlooked the 1901 patent? A. Yes. I had thought this patent 742,239 was the "New Century" shake.

RDQ402. Looking at the two of them now, what would you say? A. I would say that the "New Century" shake was patented in 1901, and that this patent of 1903 refers to the support for the deckle frame.

RDQ403. But possibly shows some similar breast roll adjusting mechanism? A. Yes, shows the same breast roll adjustment.

RDQ404. Then, would you revise your statement as to the time of the "New Century"? You now fix it as having been patented in 1901? A. Yes, in 1901 .

RDQ405. You said, I think, in your testimony that you thought the patent drawings were made while the first machine was being constructed? A. Yes.

RDQ406. When was that 1901 patent applied for? A. Ap-

plication filed January 31, 1901, granted May 28, 1901.

RDQ407. Then, you would place the time when the "New Century" shake was gotten out as in that year? A. In the year 1901.

RDQ408. Instead of 1903? A. Yes.

Mr. Paul: That is all.

RE-CROSS EXAMINATION.

By Mr. Lyman:

RXQ409. Is speed a great desideratum in those machines? A. Yes.

RXQ410? Why? A. Because it reduces the labor item in the cost of paper.

RXQ411. Referring to the matter of removing the blocking from under the Minnesota & Ontario Power Company machines, how long would it take to take out the blocking and to do anything else that was necessary to put those machines on a horizontal base? A. All four machines?

RXQ412. Yes. A. Why, I suppose they would have to lower the screens, lower the flow box, lower the shake-head—take several weeks.

RXQ413. How much on each machine? A. Well, pretty close to a week's work on each machine to do it.

RXQ414. You spoke about up hill adjustments in connection with book paper machines, whereby the wire might be run with the breast roll depressed below the level at various heights. Do you know what would determine the amount of up-hill pitch of the wire when you were making book paper? A. The thickness of the paper.

RXQ415. How would that govern it? A. Well, you want—that would govern the speed of the machine; the speed of the machine would govern the amount it would run up hill.

RXQ416. How would that work? A. I don't follow you.

RXQ417. Well, for a faster speed on book paper would you put the breast roll higher or lower than for a lower speed? A. Higher.

RXQ418. Did you have any experience in making book paper? A. I never had experience in making any kind of paper. It is only what I have gleaned in running around to the paper mills for the past twenty-five years.

RXQ419. What was the usual speed, taking news machines by and large throughout the country, in making news up to about 1906? A. You mean everybody's machine?

RXQ420. Yes. A. Modern machines averaged from 400 to 500, some of them higher.

RXQ421. Do you know of anybody's machine except your

own that went to 550 feet? A. No. I had heard of some, but I never saw them.

RXQ422. Referring again to the matter of the visit to Mr. Buchanan of Stone & Webster, is it probable that such a visit as I have described and such a conversation as I have described took place? A. It is probable that I went to Stone & Webster's to find out what was the Eibel patent, what it was all about.

RXQ423. From what facts or custom of yours or of Pusey & Jones do you infer that that was probable? A. Because we made it a point to find out about all new things in connection with paper machines.

RXQ424. Will you refer to this patent 675,072 to Savery, which shows the "New Century" shake, and tell how you would arrange that mechanism when setting up the machine in such a way that all of the breast roll adjustment would be above the level? (The witness looks at the patent.) A. It is the location of the bracket (indicating). It would have to be done in building the machine. The location of this bracket—that bracket would go clear up against here and give all the adjustment above, up and down here, and get part of it below. I am referring to bracket No. 7 in Fig. 5 of the patent. It is the relation of that bracket with relation to this part 44 here, which would govern whether it would be all above or part of it below. If that bracket 7, for instance, was located up to that point and this screw was resting on the end of it, then when they forced down on this screw it would raise this part up to its full height above there. If this 7 was located with relation to 44 as is shown in here (referring to patent drawings, Fig. 5), then you would get half of it above and half of it below.

RXQ425. Please tell me which screw it is that gives the adjustment in these figures? A. Screw 45; that one there (indicating). That simply holds the shake rail on to the "U" frame, Fig. 18. The screw 45 is what gives that adjustment.

RXQ426. I understand, then, that if you were going to arrange your machine so that all the breast roll adjustment would be above the level, you would have to construct the machine that way in the factory, and that it is not a mere matter of the way the machine is set up after it reaches the mill? A. No, it would be constructed that way.

Mr. Lyman: That is all.

RE-DIRECT EXAMINATION.

By Mr. Paul:

RDQ427. What is the part that you would have to change in the machine? A. The length of the vertical springs.

RDQ428. Anything else; is that all? A. That is about all.
Mr. Paul: You waive signature?
Mr. Lyman: Yes.
(Adjourned.)

---

607 Old South Building, Boston, Mass.
Thursday, January 3, 1918.

Met pursuant to adjournment. Present, as before.

HENRY W. CARTER,

a witness called on behalf of the defendant, being first duly sworn, deposes and says in answer to questions by Mr. Paul, as follows:

Q1. Please state your name? A. Henry W. Carter.

Q2. Where do you reside? A. In Chicago, Illinois.

Q3. What is your occupation? A. I am a mechanical engineer.

Q4. Please state what education and experience you have had in mechanical matters, and in the reading and understanding of mechanical specifications and drawings, and the comparison of mechanical structures relating to patents for inventions; particularly what, if any, experience you have had in hydraulics and hydraulic engineering? A. I was educated as a mechanical engineer at the Worcester Polytechnic, where I received my degree in 1886, and was then for some years employed as machinist and draftsman, and then machine designer in various manufacturing establishments; subsequently, served a term in the United States patent office as a member of the examining corps, and for the last twenty odd years have been principally engaged in the investigation of mechanism in connection with the comparisons involved in patent litigation. My testimony as an expert witness in such litigations has been received in several hundred different causes pending in the United States courts, and covering a wide variety of mechanical arts.

With regard to questions of hydraulics and hydraulic engineering, would state that I was at different times employed by the Dean Steam Pump Company and the Holyoke Machine Company. The Dean Steam Pump Company manufactures a general line of pumping and other hydraulic machinery, and the Holyoke Machine Company was principally engaged in the manufacture of turbine water wheels and in the installation of hydraulic power plants. The period of my employment with these concerns required daily exercise of the principles of hydraulic engineering, in the practical problems that were put before us for solution.

More recently I have been employed in connection with various litigation involving hydraulic matters, and particularly some relating to municipal waterworks, and the filter and water purifying plants of such activities.

Q5. Are you familiar with the Eibel patent in suit, numbered 845,224? A. Yes.

Q6. This Eibel patent relates to an alleged improvement in paper making machines. What do you know about such machines? A. I first became acquainted with paper making machines while in the employ of the Dean Steam Pump Company, which, in addition to its business of manufacturing pumping machinery, carried on a considerable repair business in connection with the milling industries of Holyoke, among which were numerous paper mills. Visiting these mills in connection with such repair work, I became generally familiar with the paper making machinery and particularly with the Fourdrinier machines, which excited my interest, as they were a complete novelty to me at that time.

More recently, and in connection with this case, I have visited a considerable number of paper mills, and carefully inspected their paper making machines, including the mills of the defendant company at International Falls, Minnesota and Fort Francis, Ontario, and a number of other mills, as follows: Those of the Kimberly-Clark Company, at Kimberly, Wisconsin; the Bayless Mills at Austin, Pennsylvania; the Cliff Paper Company mill at Niagara Falls; Champion Paper Company mill, at Carthage, New York; Pejepscot and Lisbon Falls mills, in the towns named in Maine.

Q7. Are you the same Henry W. Carter whose affidavit was filed in this case on February 27, 1917, in connection with the motion for a preliminary injunction, a copy of which appears in the printed record that was used in the Court of Appeals? A. I am, yes.

Q8. What do you understand to be the gist of the arrangement set forth in the Eibel patent, in suit? A. The gist of the arrangement set forth in the Eibel patent in suit is the pitching of the making wire in the Fourdrinier machine downwardly from the breast roll toward the guide roll, to a degree such as to accelerate the oncoming stock to the speed of the wire by the action of gravity due to the pitch of the wire. The underlying principle involved is that water will run down hill and accelerate as it runs, so that by making the hill steep enough any desired speed of flow may be obtained at any point in the down hill travel. Eibel proceeds upon the assumption that:

"The Fourdrinier wire has usually been arranged to

move in a horizontal plane"—

and that

"so far as I am aware the making wire has always had to perform the work of drawing along the stock."

He points out that the result of putting this work upon the wire, that is, the work of drawing along the stock and accelerating it up to the speed of the wire, has caused the fluid stock to become "waved or rippled badly near the breast roll end of the wire," and he states that by pitching the wire so as to permit gravity due to the pitch of the wire to perform the work of accelerating the stock to the speed of the wire, this objectionable disturbing of the stock is done away with. Also, that this pitching of the wire enables him to run the machine at "a very much higher speed than heretofore."

Quoting from the Eibel specification: "To accomplish this result in a simple manner, the breast roll end of the paper making wire is maintained at a substantial elevation above the level, thereby providing a continuous downwardly-moving paper making wire, and the declination thus given to the wire is such that the stock is caused to travel by gravity in the direction of the movement of the wire and substantially as fast as the wire moves. The declination of the paper making wire may be adjustable or the speed of the wire may be variable, or both the declination and speed of the wire may be adjustable, in order that the velocity produced by gravity in the stock on the declining wire will approximately equal the speed of the wire. By this arrangement the speed of the machine may be increased to such an extent as to bring the speed of the making wire up to the maximum velocity of the rapidly moving stock and a strong, even, well-formed sheet produced, which is more uniform than usual." (From line 33, et seq., page 1).

The Eibel patent acknowledges that means have previously been provided for adjusting the breast roll end of the wire to different elevations, "usually below the level, to provide for running with different grades of stock—as, for instance, with quick stock and slow stock"; the patent, however, purports to distinguish from these previous adjustments by describing the elevation contemplated by Eibel as "a substantial elevation," and one which operates "entirely above the level, to cause the stock to travel by gravity at a velocity approximately equal to the speed of the making wire, which I believe to be a new principle of operation." (Page 2, line 3, et seq.)

The assumed new Fourdrinier arrangement and mode of operation of the Eibel patent in suit ignores entirely the question of the head or pressure under which the stock is flowed upon

the upper end of the wire at the breast roll, and evidently contemplates that this head or pressure shall not constitute any considerable factor in the acceleration of the stock. No reference whatever is made in the description of the Eibel patent to this matter of head or pressure, and the drawing fails to disclose anything in this regard, even the usual flow box from which the stock is distributed to the wire. The only two elements involved in the acceleration of the stock, which the Eibel patent discusses, are the friction of the moving wire and the action of gravity due to the pitch of the wire, and as already stated, the gist of the arrangement proposed is one which puts the entire work of accelerating the stock on the action of gravity due to the pitch of the wire, thus eliminating the drag of the wire as a factor in the acceleration of the stock to the necessary speed.

The point at which the stock and wire are to attain the same speed is not discussed in the patent, but in all Fourdrinier machines this equality of speed must take place between the breast roll and the first suction box, and the point is usually about one-third the distance down the wire. In other words, equality of speed of stock and wire must necessarily be brought about in every Fourdrinier machine, whether its wire be flat or pitched, and whether the pitch be down hill or up hill. The Eibel arrangement does not contemplate any change in this condition or in the point at which it is brought about, but simply a change in the factor by which it is brought about, this being the action of gravity due to the pitch of the wire, as distinguished from the drag of the wire itself, the factor of head or pressure under which the stock is supplied to the wire, being ignored, as I have said, and evidently having been regarded as non-essential and immaterial to the alleged improvement.

Q9. You may indicate, if you will, about what amount of pitch would be required in a given distance, to bring about the mode of operation set forth in the Eibel patent in suit? A. This will, of course, depend upon the size of the machine, i. e., the length of the wire, length of making wire, and the speed at which the machine is to be run. Assuming a 70-foot length of wire, which is common at the present day, and a speed approximately 600 feet per minute, the amount of pitch required to carry out the mode of operation described by Eibel, is approximately 4½ feet, which gives a net pitch to the point of equalization between the speed of stock and speed of the wire, of 18 inches. For, of course, it will be obvious, that if this point of equalization is one-third of the way down the wire, as it is, substantially, in practice, only one-third of the total pitch is avail-

able for the acceleration of the stock.

My estimate of 54 inches in the above case, follows the Eibel patent exactly, in ignoring altogether the influence of head or pressure in the acceleration of the stock. If, however, we take into consideration an ordinary or nominal head of from 2 to 3 inches, which is said to have been common in the use of Fourdrinier machines prior to the date of the Eibel patent, the total pitch required will be reduced slightly, that is, from about 4½ feet to approximately 4 feet—48 inches; that is to say, the breast roll requires to be elevated 54 inches above the guide roll in the first instance, in which the influence of head was ignored, and 48 inches above the guide roll in the second instance in which an ordinary head of from 2 to 3 inches, is assumed.

Q10. Have you prepared any diagram to illustrate this amount of pitch required for the operation set forth in the Eibel patent in suit; and, if so, will you produce the same and explain the operation by reference to the diagrams? A. Yes, I have prepared such a diagram, and here produce it, as the first diagram on a sheet marked "Carter Diagrams, Sheet No. 1." This diagram assumes a 70-foot wire laid out on a scale of 1 inch to 1 foot, or 1/12. The diagram simply indicates the position of the breast roll at the initial and upper end of the wire, and the position of the guide roll near the lower end of the wire. The elevation of the breast roll—of the top of the breast roll, above the top of the guide roll—is shown as 4½ feet, or 54 inches. The position of the slice is indicated as directly above the breast roll, and the point of speed equality between stock and wire is taken at approximately one-third the distance down the wire, or at a point between 9 and 10 feet from this slice. The distance from the center of the breast roll to the center of the guide roll is taken as 29 feet, which in accordance with actual practice in machines employing a making wire of this length, 70 feet. I have labeled this diagram as "Diagram No. 1, showing actual pitch necessary to mode of operation set forth in Eibel patent in suit, in order to produce speed equality of stock and wire at a point 9 to 10 feet from slice, using a 70-foot wire running at approximately 585 feet per minute; total pitch 54 inches, net pitch 18 inches."

Q11. Will you please explain how you figure the amount of pitch required to bring about speed equality between the stock and wire, under the conditions illustrated by this diagram? A. I do this by resorting to the recognized engineering principles and rules governing the flow of liquid—

Q12. Can you refer to any— A. Just a minute.

Q13. Oh, I thought you were through. A. —the flow of

liquids under given heads or pressure, or down a given slope. Ignoring friction, these amount to the same thing; that is to say, the speed of flow attained by water in running down hill is the same as the speed or velocity under which water will be discharged from an orifice under a hydraulic head equal to the vertical height of the hill. And this whole subject of speed or velocity of water under pressure or flowing down grade, may be referred back to the underlying laws of gravity in producing acceleration of falling bodies. Water acts like any other falling body in this respect, and is subject to the same laws. The general formula is that the velocity is equal the square root of the product of the head multiplied by $2g$, where g is a constant, representing the force of gravity, and which has been determined by scientists to be approximately 32 feet per second. Based on this formula, the engineering handbooks all have tables worked out, which give the speed which will be caused by any given head or fall, and it is an indifferent matter whether the flow be vertically downward or on a slope, so far as the resulting velocity is concerned.

Q14. Have you any engineering handbooks here to which you can refer for a statement of this rule and the table which you say has been worked out, and any other matters illustrating your answer? A. Yes, I have here two such engineering handbooks; one, the well-known work of Trautwine, which has been standard with engineers for more than thirty years past, to my knowledge, and the other, a "Mechanical Engineers' Handbook," by Professor Marks of Harvard College, which is a more recent work. These two handbooks set forth the laws and rules on this subject, in a little different language, but to the same effect. In Trautwine, for example, on page 258 of the edition which I happen to have, and which is the 13th edition, issued in 1888, I find such a table as I have referred to, on page 258, this table being preceded by the statement that the formula used is that the theoretical velocity equals the square root of the product of the head into twice the value of g, g being taken at 32.2.

Q15. I think you mentioned as a fact that this law applied the same to water or liquid moving down a slope, as to water under a head. Is there anything in either of these books relating to that matter? A. Yes, I find this statement on page 237 of this edition of Trautwine:

> "Both in theory and in practice it is immaterial as regards the velocity and the quantity of water discharged, whether the pipe is inclined downward, as, *r o*, Fig. 1; or hor, as *r o;* or inclined upward, as *l o;* provided the total head *p o*, and also the length of the pipe, remain un-

changed."

The distance *p o*, referred to, is the vertical distance from the surface or highest point of the water, to the point at which the velocity is measured. On the same page I find also the statement that:

> "The term head or total head of water, as applied to the flowage of water through canals, pipes, or openings in reservoirs, &c., means the vert dist *i v* or *p o*, Fig. 1, from the level surf, *m i*, of the water in the reservoir, or source of supply, to the center (or more properly to the cen of grav) *o*, of the orifice"—

Both of the above statements refer to a diagram which is printed on the same page, and which makes the reference clear.

I also find in Marks' Engineering Handbook, the statement on page 213, with regard to the so-called laws of inclined planes, that if a body slides without friction down an inclined plane, its velocity will be the same as if it fell through the same vertical distance. And I have already pointed out the flow of liquids is governed by the same laws as the movement of solids, in this respect, and in the development of velocity due to the action of gravity.

Q16. Mr. Kinne, a witness examined on behalf of the defendant, produced a table, which he stated was a reproduction of a certain portion of the table in the Trautwine handbook to which you have referred, but which he had, for convenience, carried out in inches and velocity feet per minute, in addition to the arrangement of the original table in feet and velocity feet per second. This exhibit has been printed, and I hand you a copy of it, and ask you if you have compared it with the corresponding portion of the Trautwine table, and if so, if you find it to be correct? A. Yes, I have compared it, and it is substantially correct. There are a few slight discrepancies in carrying out the decimals and reducing the velocity, which Trautwine gives in feet per second, to velocity in feet per minute; but the variations are insignificant.

Q17. Now, will you refer to the Carter diagram No. 1, on sheet No. 1, and explain how you get the dimensions shown in this first diagram, as illustrating the operation set forth in the Eibel patent suit? You may refer to the Kinne table, "Defendant's Exhibit T-8" or to the Trautwine table, whichever you may find most convenient. A. The Eibel patent, as already pointed out, contemplates accelerating the stock solely by gravity due to the pitch of the wire, and to an extent sufficient to bring the stock up to the speed of the wire at a point which, in practice, is found about one-third of the way down the slope

from the breast roll to the guide roll. If, therefore, we start with an assumed speed of wire equal to 585 feet per minute, it is only necessary to determine what vertical drop will be required to accelerate the water to the speed of approximately 585 feet per minute, and in the Kinne table I find the nearest figure—589 feet per minute—to call for a drop of 18 inches. Consequently, I lay out a pitch on the diagram such as to give a drop of 18 inches to the point of speed equality, which is assumed to be from 9 to 10 feet from the slice, or approximately one-third the distance down the wire from the breast roll to the guide roll, and this necessarily means that the whole drop, or the drop of the entire distance from the breast roll to the guide roll, will be three times 18 inches, or 54 inches.

This diagram No. 1, as I have said, follows the Eibel patent literally, in ignoring any influence of head in producing velocity of stock. But I have already pointed out that if a nominal head of 2 to 3 inches should be used, the amount of pitch required will be reduced only slightly, or from four feet and one-half to approximately four feet. To determine the amount of pitch in this case, I simply subtract the amount of the head from the 18 inches required as total head or total effective drop, and multiply this amount by three. Subtracting two inches from 18 gives 16, which, multiplied by 3, is 48. Subtracting 3 inches from 18 inches gives us 15 inches, which, multipiled by 3, is 45. The total resulting pitch in this case, therefore, will be from 45 to 48 inches, according to the exact amount of head, whether 3 inches or 2 inches figured on.

Q18. You speak of this amount of head, a head of 2¼-inches, as a "nominal" head. What, exactly, do you mean by that? A. By this expression I refer to such ordinary low heads as were frequently employed prior to the Eibel invention, as mentioned in the testimony of the plaintiff's witness, Mr. Aldrich, where he refers to 2¼ inches as common early practice.

Q19. A 2¼ inch head would give about what velocity for a stock entering upon the wire? A. Approximately 200 feet per minute.

Q20. What is the percentage of the slope or grade of the wire shown ih this diagram No. 1? A. Approximately 15 per cent.

Q21. I note you have a second diagram on this same sheet, marked diagram No. 1-A. Will you explain what is shown by this second diagram? A. The second diagram is intended to reproduce the slope or pitch of wire actually illustrated in the drawing of the Eibel patent in suit, assuming as before, a 70-foot wire, a wire 70 feet in length. With this assumption,

the pitch or slope shown in the drawing amounts to practically 12 inches, or about 3½ per cent. And this amount of pitch is sufficient to give the stock a speed of only 276 feet to a point approximately one-third of the distance down the wire. Assuming a wire speed of 585 feet per minute, as before, this would be less than one-half the speed of the wire. The net pitch, in this case, is 4 inches, and a velocity of 276 feet is the theoretical velocity given in the tables, to a drop or head of 4 inches. I have labeled this diagram "Diagram No. 1-A," reproducing pitch shown in drawing of Eibel patent in suit. Assuming a 70-foot wire running 585 feet per minute, at a point 9½ feet from slice, the speed of stock under the action of gravity due to the pitch of the wire, would be only 276 feet per minute, or less than half the speed of the wire. Total pitch, 12 inches, net pitch 4 inches to a point 9½ feet from slice.

Q22. Assuming the slope shown in this diagram 1-A, to what speed would the flowing stock be brought, even if it could run clear down to the guide roll, before losing its fluidity? A. 481 feet; that is to say, the entire length of the slope, with this amount of pitch, would not be great enough to bring the stock up to the assumed speed of the wire, 585 feet per minute. Of course, also, this assumption is an impossible one as far as practical operations are concerned, for equality of speed between the stock and wire must obviously be reached at least at the first suction box, and in practice, is reached very much before the first suction box, or approximately at a point half way to the first suction box, or one-third the distance down the wire.

Q23. Assuming that a paper machine was constructed with the length of wire and the amount of pitch indicated in the drawing of the Eibel patent, as reproduced in your diagram 1-A, and the wire was run with a speed of 585 feet per minute, and the speed equality between stock and wire was obtained at a point about one-third the distance down the wire, what factors would bring about such speed equality, ignoring the matter of head; and to what extent would these different factors be involved? A. Ignoring head, or, in other words, assuming that the stock could be flowed on the wire at zero velocity, the only other factor besides gravity due to the pitch of the wire, which could be involved, would be the drag of the wire, and under the conditions assumed, the drag of the wire would be the largest factor in bringing the stock up to the speed of the wire. The action of gravity due to pitch would, in this case, be slightly less than half, and the drag of the wire slightly more than half.

Q24. Assuming that with the arrangement illustrated in diagram 1-A, the stock was to come on the wire under an initial

head of 2¼ inches, or at a speed of approximately 200 feet per minute, what would then be the factors bringing the stock to the speed of the wire at about 9½ feet down the wire, and how much would each factor be involved? A. In that event, the velocity of the stock would be the product of the three factors, of the initial head, the pitch of the wire and the drag of the wire. The initial head would give the stock a velocity of 200 feet per minute. The pitch of the wire would supply 150 feet per minute, and the balance of 235 feet per minute would be due to the drag of the wire.

Perhaps I should explain in this connection that the effect of considering initial head is inevitably to actually reduce the proportion of speed of stock due to pitch of wire. This is for the reason that a falling body does not accelerate as fast for a given amount of drop after it has started, as it does at the start. This can be observed by looking at these tables, for example. The velocity produced by a fall or head of one foot is 481 feet per minute, while the velocity produced by a fall or head of 2 feet is only 684 feet per minute; that is to say, while the first foot of fall accelerated the movement from zero to 481, the second foot of fall has accelerated the movement only from 481 to 684, which is 203 feet, or less than half the amount of the acceleration due to the first foot of fall. Consequently, the starting of the water under the wire at an initial velocity of 200 feet a second, due to a head of approximately 2¼ inches, actually reduces the amount of acceleration which is due to the pitch of the wire, as compared with what that acceleration would be in the same distance, or at the same point down the wire, if it had started from zero. Actually this reduction is approximately from 276 feet per minute to approximately 150 feet per minute.

In other words, if we assume that the stock discharged is discharged upon the wire under any head whatever, the proportion of the total acceleration of the stock, up to the point of speed of equality with the wire, due to the pitch of the wire, is correspondingly decreased, and it continues to decrease as the head is increased, until eventually it may disappear altogether.

Q25. And why, comparing these two diagrams, No. 1 and No. 1-A, do you fail to take into consideration any initial head for flowing of the stock on to the wire? A. For two reasons; first, that there is no authority in the Eibel patent for taking head or initial pressure into consideration; and second, because the conditions shown in the Eibel patent, and which are depicted by my two diagrams, on sheet No. 1, are those which give the maximum effect to the factor of accelerating the stock by gravity, due to the pitch of the wire.

(Noon recess.)

Afternoon session.

Q26. (By Mr. Paul): Have you read the deposition of plaintiff's expert witness, Mr. Aldrich, taken in this case? A. Yes.

Q27. I call your attention to the statement by Mr. Aldrich in answer to XQ31, that he does not look upon the amount of head carried as a part of the Eibel invention; also to the statement, in answer to cross questions 224-230, to the effect, in substance, that the Eibel invention, as he designates it, may be used where no head at all is employed. Is this your understanding also of the disclosure of the Eibel patent? A. In general, yes, although as to the first of these quotations I think I would go even further and state that not only does the amount of head carried form no part of the alleged invention set forth by Eibel, but that the Eibel patent evidently contemplates the use of as nearly no head at all as is possible.

With regard to the second quoted opinion of Mr. Aldrich, that the Eibel patent may be practiced where no head at all is used, would state that this is my understanding of the theory of the Eibel patent, but that, as a practical matter, I find it difficult to conceive of a situation in which the stock could be flowed on the upper end of the wire at actually no head at all or zero velocity. The very fact of supplying the liquid stock to the wire seems to inherently require, as a matter of practice, some velocity in its approach; but I regard it as clear from the patent that Eibel contemplates a condition in which the stock is supplied at as nearly no head at all, i. e., as nearly zero velocity as can be attained in practice.

Q28. And, so far as the disclosures of the Eibel patent are concerned, what is it that is to be relied upon in bringing the speed of the stock up to the speed of the wire? A. The pitch of the wire entirely; that is to say, the action of gravity due to the pitch of the wire.

Q29. Have you any other reason than what you have already explained for stating that the Eibel patent in suit contemplates the use of a very low or merely nominal head in flowing the stock on to the wire initially? A. Yes, I find that almost simultaneously with the Eibel patent in suit, the same inventor obtained another patent in which he refers to the patent in suit and in which the assumed improvement is a construction especially designed to supply the stock to the wire at the lowest possible head. In this other patent, which is No. 851,227, dated April 23, 1907 (application filed February 28, 1907), Eibel points out that the inrush of the stock through the orifice by

which it is supplied, or, in other words, beneath the slice, "causes a violent commotion of the wire immediately in front of the stock reservoir, which is objectionable"; and he proceeds to set forth a construction which is designed to deliver the stock upon the wire at the lowest possible velocity and, consequently, "with little or no commotion."

In this connection, it will be remembered that the very thing which the Eibel patent in suit purports to do away with is the waving or commotion of the stock. The patent in suit particularly refers to the waving or commotion due to the drag of the wire, and proposes to eliminate the drag of the wire by accelerating the stock solely by the action of gravity due to pitch. The second Eibel patent proceeds in consonance with this theory by providing a construction in which the commotion due to the flowing of the stock on to the wire initially is also to be reduced to the greatest possible extent, thus leaving it solely to the pitch of the wire to bring the stock up to the speed of the wire.

Mr. Lyman: Such portion of the answer as relates to another Eibel patent is objected to as immaterial and incompetent.

Q30. Does this second Eibel patent refer in terms to the patent in suit? A. Yes, it does.

Q31. I wish you would quote from the specification of this second patent in suit any statements that refer specifically to doing away with the head or providing the construction in which the head is done away with?

Mr. Lyman: Objected to as incompetent and immaterial.

A. After pointing out in the second paragraph of his specification that the ordinary flow box involves the delivery of the stock upon the wire at a "considerable velocity due to the pressure of the column of stock in the stock reservoir, commonly called the head," with the resulting objectionable commotion in the stock to which I have referred, the specification proceeds, in its paragraph beginning at line 52 of page 1, as follows:

> "This invention has for its object to construct and arrange the flow box and stock reservoir and its delivery orifice of a Fourdrinier machine in such manner that the stock will rise evenly and uniformly in the flow box and will flow into and along the stock reservoir with little commotion, in a shallow stream maintaining a smooth and substantially constant surface and will be delivered upon the wire with little or no commotion immediately in front of the stock reservoir thereby permitting fibers and other paper-forming ingredients to begin to settle on the wire immediately, resulting in improving the formation of the paper on the wire

and also in obviating springing or bending the small wire supporting rolls in front of the stock reservoir; and, at the back of the stock reservoir."

Also it states, in its paragraph beginning at line 48 of page 2, that:

"It is not herein intended that the stock shall accumulate in the stock reservoir, to produce a head, and to provide for thus controlling the volume of stock in the stock reservoir the horizontal opening at the bottom of the stock reservoir at that end opposite the flow box, is made very large to thereby permit the stock to escape as fast as it enters the stock reservoir, only holding back sufficient stock in the reservoir to maintain the lower edge of the slicer in constant engagement with the stock and to prevent the escape of froth and bubbles in excessive amounts."

(Counsel for defendant requests that the Eibel patent, No. 851,227, of April 23, 1907, referred to by the witness, be marked "Defendant's Exhibit V-18.")

Q32. Mr. Aldrich, expert for the plaintiff, has testified in the suit brought by the same plaintiff against the Remington-Martin Company that in an Eibel installation "the friction of the wire is a minor factor in the acceleration of the stock," and also that this friction is "insignificant in comparison with the pitch." I refer particularly to his answers to cross-interrogatories 69 and 70 on pages 134 and 135 of the printed record in that suit, which I call to your attention. Do you agree with those statements? A. Yes, it is my understanding of the Eibel patent that in any installation of paper making machines following this patent, the friction or drag of the wire will be done away with entirely. The Eibel patent proposes to eliminate the friction or drag of the wire on the stock and to depend solely upon the pitch of the wire to bring about the necessary acceleration of the stock to the speed of the wire.

Q33. In discussing claim 1 of the patent in suit, on typewritten page 23 of the plaintiff's record, Mr. Aldrich says:

"An example of a substantial pitch is shown in the drawing of the patent, in which the wire has a grade of about 4 per cent as indicated by the horizontal dotted lines sketched below the pitched wire. This grade in the drawing corresponds to a pitch of 12 or 13 inches for a 70-foot wire. The wire speed and the pitch must be so related to conform to the claim, that the stock under the influence of gravity is accelerated until it reaches a speed substantially equal to that of the wire."

Is this the same grade or pitch that you have laid out in your

diagram No. 1-A? A. Yes, I have assumed an elevation of the breast roll above the guide roll of 12 inches; that is to say, a total pitch of 12 inches on a 70-foot wire.

Q34. What per cent grade would that be? A. Not quite 3½.

Q35. With that amount of elevation on a 70-foot wire, that is, a 12-inch elevation, or a pitch of 3½ per cent, how fast could the wire run and have gravity due to the pitch bring the stock up to the speed of the wire at the point one-third of the way from the breast roll to the guide roll, ignoring any initial head, as you say is done in the disclosure of the Eibel patent.

Mr. Lyman: (To the stenographer) Read that question.

(The last question is read.)

A. 276 feet per minute.

Q36. There is evidence in this case by witnesses produced by the plaintiff tending to show that the defendant's machines complained of have the wire arranged on an inclination from the breast roll to the guide roll amounting to between 14 and 15 inches; that the speed of the wire in these machines is about 550 feet per minute; and that the machines are operated with a head of from 6 to 8 inches, and that the point where the sheet smooths out by reason of the stock and the wire coming to the same speed is between 9 and 10 feet from the slice. Witnesses for the defendant testify that the amount of elevation is 13½ inches and the wire speed is 585 feet. Please state whether you consider a machine of either of these descriptions would embody the alleged improvement of the Eibel patent in suit. If not, state your reasons for your conclusion. A. I have no hesitation in stating that, whether the installation embodies the conditions first recited in your question or those second recited, it could not embody the alleged improvement set forth in the Eibel patent in suit, for, in neither case, would the action of gravity due to the pitch of the wire be the sole factor, or even the predominating factor, in accelerating the stock up to the speed of the wire. Indeed, it would be but a small factor in the installation under either of the conditions set forth in your question—only 26 per cent under the conditions recited as testified to by plaintiff's witnesses, and only 20 per cent under the conditions as testified to by the defendant's witnesses.

Q37. I note that in stating these percentages you refer to some diagrams which you have on the table before you. Will you please say what these are and explain them fully, and explain the method by which you have figured the result from the installations referred to. A. The diagrams to which I have rereferred are embodied in a sheet which is marked "Carter Dia-

grams, Sheet No. 1-A." On this sheet, diagram No. 2, represents the conditions assumed according to the testimony of plaintiff's witnesses. Diagram No. 3 represents defendant's machines under conditions assumed in accordance with the testimony of defendant's witnesses as recited in your previous question. These conditions represented in diagram No. 3 substantially represent three of defendant's machines as I saw them in November last. These machines are those known as Nos. 1, 3 and 4. Defendant's No. 2 machine had been lowered as compared with the other three machines and had less pitch than the others at the time I was at defendant's mill.

Referring now to diagram No. 2, this is laid out to represent a paper machine having a 70-foot wire, with a total pitch of 14 to 15 inches; that is to say, with the breast roll raised 14 to 15 inches above the guide roll. The net pitch in this case, to a point approximately a third down the wire, say between 9 and 10 feet, is a little less than 5 inches. I have marked it 5 inches on the diagram. The head assumed is 7 inches, and the speed of wire assumed is 550 feet per minute. I have labeled the diagram as follows:

> "Diagram No. 2. Defendant's machine operating as per plaintiff's testimony. Head 7 inches; speed of wire 550 feet per minute; point of speed equality of wire and stock 9-10 feet from slice; total pitch 14-15 inches; net pitch 5 inches."

Under these conditions, I find that the total velocity of 550 feet to which the stock would have been accelerated at the point of speed equality between stock and wire, would be due, in part, to the 7-inch head, in part to the action of gravity, due to the pitch of the wire, and in part to the drag of the wire. The greatest factor in producing the acceleration of the stock would be the velocity at which the stock is supplied to the wire under the pressure of the 7-inch head. This would be approximately 350 feet per minute. The velocity due to pitch would only be 130 feet per minute, or approximately 26 per cent of the total acceleration. The balance of the acceleration due to the drag of the wire would be 70 feet per minute.

Returning to Diagram No. 3, representing defendant's four machines according to the testimony of defendant's witnesses and representing defendant's machines Nos. 1, 3, and 4 as I saw them in November last, the same length of wire, 70 feet, is here represented, with the same distance, 29 feet, from the center of the breast roll to the center of the guide roll. The total pitch or elevation of the breast roll above the guide roll is here depicted as 13½ inches, making the net pitch to a point one-third

the way down the wire, or between 9 and 10 feet from the slice, 4½ inches. The head represented is 6 inches. The diagram has been labeled by me:

> "Diagram No. 3. Defendant's machines Nos. 1, 3 and 4. Head 6 inches; speed of wire, 585 feet per minute; point of speed equality of wire and stock, 9-10 feet from slice; total pitch, 13½ inches; net pitch, 4½ inches."

Under the conditions assumed in "Diagram No. 3," the total acceleration of 585 feet per minute necessary to bring the stock up to the speed of the wire at the point of speed equality, 9-10 feet from the slice, involves a velocity factor of 330 feet per minute due to the head in the flow box, the velocity factor of 118 feet per minute due to the pitch of the wire, and the velocity factor of 137 feet per minute due to the drag of the wire. The percentage of the total velocity or acceleration due to the pitch figures in this case 20 per cent. This factor is thus the lowest of the three factors which are involved in the acceleration of the stock under the conditions here depicted, and amounts to only one-fifth of the entire acceleration.

Q38. Please explain what is represented by Diagram No. 4 on this same sheet. A. Diagram No. 4 on this same sheet, "Carter Diagrams, Sheet No. 1-A," is laid out to represent the conditions which obtained on defendant's No. 2 machine as I observed it last November. This machine had been lowered somewhat at its breast roll end so that the total pitch, instead of being 13½ inches, as in the case of the machines Nos. 1, 3 and 4, is 6 inches, making a net pitch to a point approximately one-third down the wire of a little over 2 inches. The head taken in this case is 6 inches, and the point of speed equality is still approximately one-third down the wire—near enough to that fraction for the purposes of our computations. Actually, the point of speed equality seemed to be a trifle farther from the slice than in the case of defendant's Nos. 1, 3 and 4 machines. That is to say, the point of smooth-out, or the point where the stock reaches the velocity of the wire, seemed to be, perhaps, a foot farther along, or from 10 to 11 feet from the slice, instead of 9 to 10 feet from the slice. I have labeled this diagram:

> "Diagram No. 4. Defendant's No. 2 machine (now). Head 6 inches; speed of wire, 585 feet per minute; point of speed equality of wire and stock 10-11 feet from slice; total pitch 6 inches; net pitch 2⅛ inches."

Under these conditions, I have figured that, of the total acceleration of 585 feet per minute which is given to the stock in order to bring it up to the speed of the wire at the point of

speed equality approximately one-third down the wire, something over one-half, that is, 330 feet per minute, results directly from the head in the flow box, this factor being the same as in the case of Diagram No. 2. I have figured that part of the velocity due to the pitch of the wire at 65 feet per minute, and the balance of the velocity due to the drag of the wire as 190 feet per minute. The percentage of the total velocity or acceleration of the stock which results from the pitch of the wire figures 11 per cent, or slightly more than one-tenth of the total acceleration.

I might state, in this connection and in connection with all of my computations of stock velocities on these paper machines, that friction is not taken into account. That is to say, that the velocities figured are theoretical velocities of the flow of water, ignoring friction.

Under such conditions as these machines present, however, this ignoring of friction is unimportant. The theoretical velocities will correspond almost exactly with the actual velocities to be expected under the conditions assumed, for the only frictional factor which can really amount to anything is that of the stock on the wire, and this, instead of impeding the velocity of the liquid under the conditions mentioned, actually tends to accelerate it. That is to say, that, whereas in figuring the flow of liquids ordinarily in pipes or canals, considerable allowance has to be made for the frictional resistance to the flow, of the banks or walls of the surrounding conduit, in this case the banks of the conduits are constituted by the moving bottom formed by the making-wire and the moving sides formed by the deckle straps, and these offer no resistance whatever to the acceleration of the stock, but on the contrary tend, if anything, to help it.

There is, of course, some frictional resistance to the flow of the stock beneath the slice; but the authorities agree that this does not appreciably affect the velocity—only the amount or volume of the liquid discharged through the given orifice. Professor Marks gives the reduction in velocity under such conditions as are here presented by the discharge of the stock beneath the slice as only one per cent; and Trautwine also treats the reduction as negligible.

My computations, furthermore, are based, as stated, on the flow of water, and, consequently, are the maximum velocities which could be expected, even from the thinnest stock. Possibly, these velocities would be reduced somewhat by the fact that the stock fed to a Fourdrinier paper-machine is water mixed with a small proportion of solids or pulp. The pro-

portion of pulp, however, is very small, amounting to less than one per cent of the total weight; consequently, the slowing down due to the presence of the pulp could not amount to very much. Its effect in so far as it exists at all would simply be to increase the factor of the drag of the wire in accelerating the stock to the speed of the wire. If taken into consideration in the matter of pitch, it would simply require a greater pitch than I have depicted in order to give as great a factor of acceleration due to pitch as that which I have figured.

Q39. In discussing defendant's machines and assuming them to be constructed and arranged as testified to by Mr. Gray, who was called as a witness for the plaintiff, with substantially the head, pitch and speed depicted in your Diagram No. 2, Mr. Aldrich, plaintiff's expert witness says:

> "The acceleration of the stock up to speed equality with the wire is produced on defendant's machines primarily by gravity, due to the pitch of the wires, which causes the stock to travel rapidly in the direction of movement of the wire, and quickly to reach the speed of the wire."

I refer to typewritten page 27 of Mr. Aldrich's deposition. Do you agree with this statement made by Mr. Aldrich? A. No, Mr. Aldrich is evidently mistaken in this statement. Even under the conditions which he assumes as existing in regard to defendant's machines in accordance with Mr. Gray's testimony, the acceleration of the stock up to the speed of the wire, so far from being caused primarily by gravity due to the pitch of the wire, is caused primarily and principally by the initial head and drag of the wire, these two factors together bringing about approximately three-quarters of the acceleration of the stock up to the speed of the wire, leaving but a quarter of this acceleration to result from the factor of the action of gravity due to the pitch of the wire; and in defendant's actual installation as observed by me and as testified to by defendant's witnesses, this factor of acceleration due to pitch of the wire is actually only 20 per cent, or one-fifth of the entire acceleration.

Q40. On pages 29 and 30 of the typewritten copy of Mr. Aldrich's deposition, where he is discussing Claim 2 of the Eibel patent in suit and comparing the same with defendant's machines, he defines "normal speed," as referred to in their claim, as a wire speed of 405 feet per minute, and he then says:

> "The high elevation of the wire in the defendant's machines causes the stock to travel by gravity something like 145 feet per minute faster than this normal speed."

Will you refer to this statement and say whether you agree with what Mr. Aldrich here says? A. This statement of Mr.

Aldrich is not in accord with the facts as I find them. The elevation or pitch of the wire in defendant's machines, even considering the 14 to 15 inch pitch which Mr. Aldrich was assuming, only results in a velocity of stock of 130 feet per minute or 275 feet per minute slower than the normal wire speed of 405 feet per minute which his statement recites. Taking the actual existing conditions of defendant's machines into account, as per the testimony of defendant's witnesses and as I observed defendant's machines, the actual velocity of stock due to the elevation or pitch of the wire is only 118 feet per minute or 287 feet per minute slower than the so-called normal wire speed referred to by Mr. Aldrich.

Q41. As I understand this portion of Mr. Aldrich's testimony, he figures that defendant starts in with the old normal speed of 405 feet, which he says was a common speed prior to Eibel, and then he figures that by elevating the wire defendant gets 145 feet faster than his normal speed, and that he then speeds the machine to cause the wire to travel substantially the same rate of speed as the rapidly moving stock. Is that the way you understand that portion of the testimony? Mr. Aldrich is referring particularly to Claim 2 of the patent. A. Yes, the statement seems to be very clear. Mr. Aldrich says:

> "The high elevation of the wire in the defendant's machine causes the stock to travel by gravity something like 145 feet per minute faster than this 'normal speed' (previously placed by him at 405 feet per minute); and the machines have, in the language of the claim, means for increasing the speed of the machine to cause the wire to travel at substantially the same rate of speed as the rapidly moving stock."

Following the Eibel patent in suit, Mr. Aldrich has evidently ignored here the factor of the action of gravity due to head in the flow-box and the factor of the drag of the making-wire, and has regarded the entire acceleration of the stock as resulting from gravity due to the so-called high elevation of the wire of defendant's machines, all of which is directly contrary to the facts as I figure them.

Q42. I call your attention particularly to Claims 1, 2, 3 and 12 of the Eibel patent in suit, and ask you to state whether you find the arrangement and mode of operation set forth in those claims in the defendant's machines; whether the same are considered to be constructed and operated in accordance with the testimony of plaintiff's witnesses as illustrated in your diagram No. 2, or defendant's witnesses, as illustrated in your Diagram No. 3. A. No, I do not. In each of those claims the

essential requirement is of an elevation of the paper-making wire such as to cause the stock to be accelerated by gravity approximately to the speed of the wire. Defendant's machines certainly have no such elevation, whether considered as shown in my diagram No. 2, according to the testimony of plaintiff's witnesses, or as shown in my Diagram No. 3, according to the testimony of defendant's witnesses. In neither case is the amount of elevation or pitch more than a small part of that which would be required to give the results set forth in these claims. This is true even if we take into full consideration the head used by the defendant, instead of ignoring it as the Eibel patent does.

I have already pointed out that, as applied to a machine of the same general construction and dimensions as defendant's machines, the theoretical carrying out of the Eibel patent requires a pitch of 54 inches, as against 14 to 15 inches shown in Diagram No. 1, or 13½ inches shown in Diagram No. 2, and which is actually the total pitch of the defendant's machines as I observed them. And even if we take into consideration and give full effect to the 7-inch head which is shown in Diagram No. 2, the elevation required, even in order to bring the speed of the stock up from the speed produced by this head to the speed of the wire, would require an elevation at least double that which Diagram No. 2 shows. Under the actual conditions of defendant's machines as illustrated in Diagram No. 3, it would require an elevation of approximately 36 inches, as against 13½ inches, in order that the pitch might result in the acceleration of the stock from the initial velocity given by the head to the full speed of the wire of 585 feet.

Under these circumstances, I find it impossible to conclude otherwise than that defendant's machines are constructed and operated in a materially different manner from that required by Claims 1, 2, 3 and 12 of the patent in suit.

(Adjourned.)

607 Old South Building, Boston, Mass., Friday, January 4, 1918.

Met pursuant to adjournment. Present as before.

Direct examination of Mr. Henry W. Carter, continued.

By Mr. Paul:

Q43. Mr. Carter, have you prepared any other diagrams illustrating the arrangement and operation of other Fourdrinier machines? If so, will you please produce the same? A. I have. I have prepared three sets of such diagrams, and here produce them, as Carter diagrams, sheets Nos. 2, 2-A and 3, containing diagrams numbered consecutively from 5 to 16.

Q44. From what have you obtained the data used in laying out these diagrams? A. I have made out these diagrams according to data given to me by counsel for the defendant. In some instances I have seen the machines referred to and checked the data; in others, I have not.

Q45. Will you designate the diagrams in respect to which you have seen the machines and checked the data. A. The Bayless Austin No. 2 machine, shown in Diagram No. 6; the Kimberly-Clark, Kimberly machine, as shown in Diagram 7; the Lisbon Falls machine, shown in Diagram No. 8, and the Pejepscot, Champion and Cliff Paper Company machines, shown in Diagrams Nos. 14, 15 and 16—I have visited all these machines recently, and checked the data given me, as far as practicable. Some of the data given me relates to dates in the past, concerning which I have no information.

Q46. You have no personal information in respect to these machines, except such as you have obtained during the last year, I take it? A. That is all.

Q47. And that information relates only to the machines that you have named? A. These machines and defendant's machines.

Q48. I was referring to these machines in the later diagrams. A. Yes, that is true.

Q49. Now will you state, in a general way, what these diagrams are intended to cover; make a general statement referring to all of them, if possible. A. These diagrams are all laid out on the scale of one inch equals one foot, or one-twelfth, and correspond generally with the diagrams shown on sheets Nos. 1 and 2. In each case, they indicate the breast and guide rolls and the pitch of the making-wire, the location of the slice, and in some instances, the position of the first suction box. Some of them indicate also the approximate position of the point where the stock reaches the speed of the wire, or where the stock smooths out in its travel down the wire. The labels on each diagram which accompany the diagram number, are intended to state the date upon which the diagram is laid out. In addition to this, most of the diagrams bear a legend, which gives the relative factors involved in the accelerating of the speed of the stock up to the speed of the wire, under the conditions of use stated or assumed.

Q50. In machines examined by you, at what point did you find the indication of speed equality between the stock and wire; that is, about what distance between the breast roll and the guide roll, or breast roll and suction box, as the case might be? A. Substantially one-third the distance from the breast-

roll to the guide roll. The only instance in which it seemed closer to the breast roll than this, was that of the Cliff Paper Company's mill at Niagara, where no side shake is employed in the machine. It should, however, be understood that there is no absolutely definite point which can be determined by an inspection, in any machine, as the point where the speed of the stock is accelerated to the speed of the wire. In other words, the smoothing out of the ripples, does not suddenly take place at any definite place, and opinions might differ as to any particular machine, as to whether the smoothing out occurred a few inches or a foot earlier or later. The whole breast roll end of the machine is being agitated by the side shake, and more or less ripples may be perceived, in most cases down as far as the suction box, and sometimes beyond. Distinct agitation or waving and rippling, due to the inequalities of speed between stock and wire and to the inrush of stock under the slice due to the head do, however, disappear pretty distinctly at a point approximately one-third the distance down the wire.

Q51. Mr. Aldrich, the plaintiff's expert, has testified that this speed equality must occur at some point before the first suction box is reached. You do not see any reason to disagree with this statement made by Mr. Aldrich? A. No. I think that is true, beyond question.

Q52. And as I understand from your testimony, you found, in machines examined by you, that the substantial smoothing out indicating the speed equality between the stock and wire, you found to be about one-third of the distance from the breast roll to the guide roll; is that right? A. Yes.

Q53. Now in these machines that were not seen by you, but where you have laid out diagrams, at what point have you assumed speed equality between stock and wire? A. Approximately one-third down the wire.

Q54. If there were any of those that had the wire flat beyond the first suction box, at what point have you assumed speed equality in respect to the distance between the breast roll and the suction box? A. Approximately halfway, which, again, would be approximately a third of the distance down the wire, from the breast roll to the guide roll.

Q55. Have you made calculations to ascertain any facts in respect to the machines being operated in accordance with the diagrams that you have prepared? A. Yes.

Q56. Will you refer to the diagrams and explain them briefly, and state the calculations that you have made, and what you found to be the results in respect to each one. A. "Diagram No. 5." Diagram No. 5 is marked as follows:

"Diagram No. 5, Bayless Austin machine 1902. Barrett-Horne patent No. 691,333. Head (average) 3-4 in. Paper speed 300-350 f. p. m. Pitch 3-6 in."

This data is made up exclusively from data supplied to me by Mr. Paul, and which I have not checked. With the information given, however, I am enabled to calculate the speed or velocity of stock under similar conditions, in accordance with the data given. Thus, taking the 4-inch head, 5-inch pitch, I find that the velocity of stock due to head will be 260 feet per minute, approximately, and that due to pitch, 72 feet per minute, approximately, assuming the speed equality between the stock and wire at approximately one-third the distance down the wire. This brings the total velocity of the stock due to the gravity of the head and pitch, at 332 feet per minute, which is substantially what the speed of the wire would be at a paper speed of 350 feet per minute, which is the speed at which the machine was designed to run, according to the data given. Under these circumstances, the drag of the wire would be eliminated as a factor in accelerating the speed of the stock up to the speed of the wire, and the percentage of the total velocity of the stock under the action of gravity due to the pitch of the wire, is 21 per cent.

"Diagram No. 6." I have labeled this diagram "Diagram No. 6. Bayless Austin No. 2 machine (as operated November 13, 1917). Head 4½ inches. Wire speed 369 f. p. m. Paper speed 390 f. p. m. Point of speed equality wire and stock 6 ft. 6 in. from slice. Total pitch 4½ in. Net pitch 1½ in."

The data here recited as to this Bayless Austin No. 2 machine, was checked by me on November 13, 1917, when I visited the Bayless plant at Austin, Pennsylvania. Under the conditions here depicted, I find that the velocity of stock due to head would equal 276 feet per minute, the velocity of stock due to pitch, 64 feet per minute, and the velocity of stock due to drag of wire, 29 feet per minute, making a total of 369 feet per minute, which is the wire speed. The percentage of the total velocity of stock due to pitch, in this case, is found to be a little over 17.

"Diagram No. 7." I have labeled this diagram: "Diagram No. 7, Kimberly-Clark, Kimberly machine, 1904. Head 2½ to 6 in. Speed per contract 50-300 f. p. m. Drive changed to permit 425 f. p. m. Point of speed equality, wire and stock 7 ft. from slice. Total pitch (Moore and White) adjustable to 6 in. Net pitch 1 5-6 in."

The data here given were furnished me by Mr. Paul. Of

course I know nothing about the contract speed here recited or the change in drive referred to, by which greater speed was permitted. I have, however, seen this machine in operation on two occasions, with the same pitch, 5½ inches, which is here given, and with the speed in one instance somewhat lower, and in the other instance somewhat higher than 300 f. p. m. The first time I saw this machine, it was running, according to my recollection, at about 370 paper speed. The second time I was there, it was running considerably slower, but I do not now recall just how fast.

Taking a head of about 2½ inches, I have figured the velocity of stock due to the head, at 210 f. p. m., the velocity of stock due to pitch at 80 f. p. m., making a total velocity of stock due to the gravity of head and pitch, 290 feet per minute, which would leave 60 feet per minute to the drag of the wire, if the machine was run with a wire speed of 350 feet per minute. This is about the speed at which the machine was run, on the occasion of my first inspection. Under these circumstances, the percentage of stock velocity due to pitch, will be 23. If run at a lower speed, the drag of the wire might be eliminated entirely, and the percentage of velocity due to pitch would, in that case, be correspondingly larger.

> "Diagram No. 8." I have labelled this diagram, "Diagram No. 8, Lisbon Falls, Me. 1902-1905, and continuing —present wire speed 490. Head 6-8 in. Paper speed 520-569 f. p. m. Present speed 530 f. p. m. Point of speed equality wire and stock 10 ft. from slice. Total pitch breast roll to first suction box 4 in. Wire flat beyond. Net pitch 2 in."

This data corresponds with my observation of the Lisbon Falls machine, as I saw it in November last.

Assuming the head to be 6 inches, the speed of stock due to the head to be 325 f. p. m., the speed of the stock due to the pitch 66 f. p. m., the speed of the stock due to the drag of the wire 99 f. p. m., the percentage of the speed of the stock due to the pitch, 13.

> "Diagram No. 9." I have labeled this diagram, "Bagley and Sewall (blueprint Ex't) 1904. Speed (at dryer) 530 f. p. m. Total pitch 3½ in. Head 8 in. Net pitch 1¾ in., wire flat beyond first suction box."

I have no personal knowledge of this machine, but have made the following calculations, based on the data given. Speed of stock due to head, 380 feet per minute; speed of stock due to pitch, 50 feet per minute; speed of stock due to drag of wire, 100 feet per minute; percentage of speed due to pitch, 10 per

cent.

"Diagram No. 10." I have labeled this diagram, "Diagram No. 10, Niagara, Wis. (Kimberly-Clark) mill 1902. Paper speed 450-475 f. p. m. Pitch 4 in. Head not stated. Wire flat beyond first suction box."

This diagram is made up exclusively from data furnished me by counsel for the defendant. I have no personal knowledge of the machine, which I have never seen.

I have made the following calculations with regard to the action of the machine, in accordance with the data given, and assuming a head from 2 to 3 inches, wire speed about 425 feet per minute, speed of stock due to head, 210 feet per minute, speed of stock due to pitch, 95 feet per minute, speed of stock due to drag of wire, 130 feet per minute, percentage of speed due to pitch, 22 per cent.

"Diagram No. 11." I have labeled this diagram, "Diagram No. 11, Palmers Falls, 1898, paper speed 500-525 f. p. m. Pitch 3 in. Head 4-5 in. Wire flat beyond first suction box."

I have no personal knowledge of this installation, and have never seen it. Assuming a head of 5 inches and a wire speed of 490, which would correspond with the paper speed of 525 or thereabouts, I calculated that the speed of stock due to head would be 295, speed of stock due to pitch, 60, speed of stock due to drag of wire, 135, the percentage of speed of stock due to pitch, 12.

"Diagram No. 12." "King machine (Beloit Iron Works) 1901-1902. Speed per contract 30-225 f. p. m. Pitch about 4 in. Head (possible) 8 in. Wire flat beyond first suction box."

I have no personal knowledge of these machines, and made no calculations with regard to this diagram.

"Diagram No. 13." I have marked this diagram "Diagram No. 13 Northern Paper Mill (Beloit Iron Works) 1904. Paper speed per contract 125-350 f. p. m., pitch (about) 5 in. Suction boxes carried by adjustable rails."

I have no personal knowledge of this machine, and have never seen it. With the data given, and assuming the head of 2 to 2½ inches, with a speed of 325 corresponding with the paper speed of 350, I calculate that the speed of stock due to head would be 200 feet, that due to pitch, 108 feet, that due to drag of wire, 17 feet, the percentage of speed of stock due to pitch, will be 30.

"Diagram No. 14." I have marked this diagram, "Pejepscot Paper Mills 1906. Paper speed 506-520 f. p. m.

Point of speed equality wire and stock 10 ft. from slice. Total pitch 5 in. Net pitch 2⅝ in. Wire flat beyond first suction box."

The data here given corresponds to my observation of this machine, in November last. With a wire speed of about 490, corresponding with the paper speed of 520 or thereabouts, I find that the speed of the stock due to head, will be 295 feet, that due to pitch, 85 feet, and that due to drag of wire, 110 feet per minute, the percentage of the speed of the stock due to pitch, would be 17.

"Diagram No. 15." I have labeled this diagram, "Champion Paper Company (1911). Paper speed 490-540 f. p. m. Point of speed equality of wire and stock 10 ft. 8 in. from slice. Flat wire. Head 8-10 in."

I inspected this machine November last, and found it running under about the conditions here mentioned. As I recollect it, the paper speed on the day I was there, was 490, and the superintendent stated that that was slower than they usually ran. The stock was off that day, and apparently required slowing down below normal running speed.

Assuming a paper speed of 540, wire speed about 510, I figure that the speed of stock due to head, will be 430, and that due to drag of wire, 80 feet per minute. No pitch is employed here.

"Diagram No. 16." I have marked this diagram, "Diagram No. 16 Cliff Paper Co., 1912 (about). Head 5 in. (about). Paper speed 415 f. p. m. Wire speed 391 f. p. m. Point of speed equality wire and stock 5 ft. from slice. Total pitch 4¾ in. Net pitch 1½ in. No side shake."

I examined this machine in November, and checked the data here given. The machine was operating under substantially the conditions recited, when I examined it. With the paper speed of 415, wire speed of 391, I find the speed of stock due to head, will be 308, speed of stock due to pitch, 40, speed of stock due to drag of wire, 43, the percentage of speed due to pitch, is approximately 10.

The figures with regard to all of these diagrams, may be understood to be merely approximate. Certain conditions have to be assumed in every case, in order to make the computation, and the figures moved very slightly, according to the exact assumption made. For instance, with regard to the speed due to head, the engineering rule is to take the head at the distance from the surface of the water to the center of the orifice of discharge. In paper mill practice, however, the head is measured from the surface of the water to the bottom of the

pond. Consequently, it is necessary to make an allowance for the half diameter or depth of the opening beneath the slice, and this opening varies from time to time, and under different conditions, so that exact accuracy in this respect is not ordinarily possible. In figuring speed due to head, therefore, I have arbitrarily subtracted one-half inch from the actual head given, and this applies to all of my diagrams. Theoretically, this would correspond to an opening beneath the slice of approximately one inch, which is probably less than average conditions, but I wish to avoid the refinement of quarter inches, as far as possible, and an assumed slice opening of one and one-half inches would exactly require an allowance of three-quarters of an inch. The matter of a quarter of an inch one way or the other, is an unnecessary refinement in such calculations, and I consequently assumed that the allowance of one-half inch which I made would give approximately exact results.

So, also, in some instances, it has been necessary to calculate the wire speed from the paper speed, and there is no definite or exact relation betwen the two, which will apply in all cases. I note that in his testimony, the plaintiff's expert, Mr. Aldrich, made a 10 per cent allowance between paper speed and wire speed; that is to say, he discounted the paper speed about 10 per cent, in order to get the wire speed. My observation would lead me to think that this allowance was excessive, and that it would be more nearly 6 or 7 per cent. But it is certain that there is no exact ratio between the paper speed and wire speed, that can be relied upon as applying in all cases. Consequently, the exact results obtained from calculations vary slightly, according to the assumed wire speed, where the exact speed of the wire is not given. So that here, again, the definite figures arrived at as the result of calculations, must be regarded as only approximate. But while this is true—that the figures arrived at from these calculations are necessarily only approximate, they, nevertheless, are sufficiently accurate to give a substantially correct idea of the manner in which the machines will operate under a given set of condition, and of the relative proportions of the various factors which enter into the acceleration of the stock, up to the speed of the wire.

(Counsel for defendant requests that the complete set of diagrams produced by the witness, be marked "Defendant's Exhibit W.")

(Noon recess.)

Afternoon session.

Q57. (By Mr. Paul): Mr. Aldrich, plaintiff's expert, in referring to the Eibel patent in suit, has made certain state-

ments which I quote from his testimony, as follows:

"XQ32. What variation in pitch and speed can be employed and still obtain the advantages of the Eibel invention? A. I don't think any exact amount of variation can be stated. The pitch must be sufficient to bring about a correlation between the speed of the stock and the speed of the wire before the drainage has proceeded so far that the fibres have lost their freedom of movement.

"XQ33. What do you mean by correlation between the speed of the stock and speed of the wire? A. I mean the equality of speed between the two. * * *

"XQ36. What I am trying to get at, Mr. Aldrich, is to ascertain from you what amount of variation there may be between the speed of the stock and the speed of the wire and have the same come within this correlation that you speak about. A. Of course, the speed equality must be obtained somehow. If not obtained by head on the slice and pitch of the wire, it is left for the drag of the wire upon the stock to bring this about. Now, if the acceleration of the stock from the time it leaves the slice to the time it reaches the speed of the wire has been substantially brought about by the declining wire, I would consider that that Eibel invention has been made use of."

Examining the arrangement and mode of operation of defendant's machines, whether as testified to by plaintiff's or defendant's witnesses, by this testimony of Mr. Aldrich, please state whether defendant does or does not, in your opinion, use the so-called Eibel invention? A. No, for the reason that, in defendant's machines, the drag of the wire still remains a very material factor in the acceleration of the stock up to the speed of the wire, this factor of drag being, in defendant's actual construction as seen by me, considerably greater than the factor of acceleration due to the pitch of the wire.

Q58. As you understand the Eibel patent in suit, does it profess to set forth any novel structure in paper-making machines? A. Not as I understand it. The mechanism itself is substantially the old mechanism; at the most, it is simply a question of how high the breast-roll is raised; it is a question of degree.

Q59. Do you understand that any novel mechanism is proposed for the elevation of the breast-roll in this Eibel patent? A. No, the Eibel patent shows elevating screws for the purpose and in this respect is mechanically the same as, for example, the old Barrett & Horne patent, No. 691,333. And the same results so far as operation is concerned may be brought about

simply by blocking up the old machines without any structural change whatever.

Q60. What would be the result of placing one of the old machines on an inclined foundation or floor? A. That would amount to the same thing.

Q61. The elevation might be gotten in that way,—the same amount of elevation? A. Yes. It makes no difference how this elevation is obtained so far as the theory of the Eibel patent is concerned.

Q62. Are you familiar with the structure disclosed in the Barrett & Horne patent to which you just referred, No. 691,333? A. I am, yes. This is the same structure substantially which I saw embodied in the Bayless machine at Austin, Pennsylvania.

Q63. That is the machine No. 2, of which you made the diagram? A. Yes.

Q64. Do you find anything in the disclosure of the Barrett & Horne patent, No. 691,333, that would limit the amount of adjustment of the breast-roll end of that Fourdrinier? A. There is nothing in the design of the mechanism to put any limit on it. Of course, in any given mechanism it would be limited according to the proportions given the actual parts constructed.

Q65. In the machine disclosed in this Barrett & Horne patent, No. 691,333, if the breast-roll end of the Fourdrinier is elevated, is any change made to the position of the suction boxes, or do they remain level, as disclosed under the design of the patent? A. They apparently remain level so far as the structure of the machine is concerned. Of course, the supporting posts at the front of the rails which carry the suction boxes might be blocked up.

Q66. Would that make any change in the construction of the machine? A. No. There is no reason why this standard, which is the one adjacent to the numeral 15 of Fig. 12, should not be blocked up, if desired. There is nothing about the machine that would be altered.

Q67. I think you testified in connection with your diagrams that you had seen certain machines where the suction boxes were on a level on the rails and the breast-roll ends of the machines were elevated. What was the highest elevation which you have seen on the breast-roll end of any machine in operation where the suction boxes were level or flat? A. Five inches. This was at the Pejepscot Mill near Topsham, Maine. In this machine the slope of the wire was confined to the stretch between the breast-roll and the first suction box. From the first suction box back to the guide-roll the wire was flat.

Q68. What was the elevation of the breast-roll above the first

suction box at the top of the breast-roll? A. Five inches.

Q69. Did that machine seem to be operating all right? A. Perfectly, so far as I could see.

Q70. In referring to the first sheet of diagrams, you stated that you had one diagram that was a reproduction, if I recall it, of the drawing of the Eibel patent. What particular value do you place upon the proportions of the drawings of patents? A. I do not put any stress on the matter of exact proportion of parts, or the matters of exact angles, or the like, illustrated in the drawings of patents. Patent drawings are not ordinarily made to scale and are not required to be, and, generally speaking, their exact proportions form no basis for any definite conclusions as to the intention of the patentee. They are to be regarded simply as sketches illustrating the text of the patent. The only reason I laid this diagram out to reproduce the pitch shown in the drawing of the Eibel patent was that considerable had been said in plaintiff's testimony in this and the Remington-Martin litigation about the exact angle or amount of pitch illustrated by Eibel in his drawing. And I wish to show what actual character of operation would result in a given instance by the use of the amount of pitch thus testified to.

Q71. Do you refer to that portion of the testimony of Mr. Aldrich in the present case where he states, page 17 of the typewritten copy, as follows:

> "The drawing which forms a part of the specification shows the wire with an inclination of about 4 per cent, or 12 to 13 inches for a wire of the ordinary length."

Is that one of the places you refer to? A. Yes, that is one of the places I refer to.

Q72. You also have in mind the statement on page 23 of the typewritten copy of Mr. Aldrich's deposition reading as follows:

> "An example of a substantial pitch is shown in the drawing of the patent, in which the wire has a grade of about 4 per cent, as indicated in horizontal dotted lines sketched below the pitched wire. This grade in the drawing corresponds to a pitch of 12 or 13 inches for a 70 foot wire."

A. Yes.

Q73. Would you consider that there was any reason for confining Barrett and Horne to the exact proportions of the structure disclosed in their patent, No. 691,333? A. Not the slightest. I should consider it ridiculous to do so.

Q74. In the testimony in this case Mr. Aldrich has testified, in substance, that the Eibel invention might be practiced in the operation of a machine having a 5 inch pitch to the making-

wire and with the wire running at a speed of 350 feet per minute. I call attention to Mr. Aldrich's testimony on cross-examination, to the answers of this witness to cross questions 64 and 65, also to the answers to cross questions 46 and 48. Please state whether, in your opinion, an operation with a 5 inch elevation of the breast-roll and a 350 feet speed of wire would or would not be an ordinary operation of the machine disclosed in the Barrett & Horne patent, No. 691,333. A. I should say it would be. That is to say, taking a machine built under the Barrett & Horne patent, capable of an elevation of 5 inches, which would be perfectly consistent with the disclosure of the patent, its operation with the breast-roll raised to the extent of 5 inches, permitted by the adjustment shown, and at a speed of 350 feet, which is an ordinary speed for such machines, would simply be the ordinary operation of the machine, nothing more nor less.

Q75. Would that amount of elevation be practical with the suction boxes remaining level? A. Certainly. The Pejepscot mill is a living demonstration of that fact.

Q76. It has been testified in this case that the machine of the Northern Paper Company, a diagram of which has been produced by you numbered 13, furnished to it by the Beloit Iron Works, has single rails extending from the breast-roll end of the machine to the guide-rolls, instead of having the rails in two sections, as in the defendant's machines and in other machines referred to in the testimony, and that the suction boxes are hung upon these rails and that the forward ends of the rails are vertically adjustable. Please compare such structure with the arrangement pointed out in Claims 7 and 8 of the Eibel patent in suit, No. 845,224. A. The machine of the Northern Paper Company described in your question would respond precisely to Claims 7 and 8 of the Eibel patent in suit. Claim 7, for example, calls for "Fourdrinier machine having the paper making wire declined from breast-roll to guide-roll and the suction boxes supported at a corresponding declination." This exactly describes the Northern Paper Company machine. Claim 8 calls for "a Fourdrinier machine having the paper making wire declined from the breast-roll to the guide-roll and the several suction boxes arranged at different elevations." This also perfectly describes the Northern Paper Company machine. When the breast-roll is adjusted above the level by the adjustment provided in this machine, the paper making wire will pitch downwardly from the breast-roll to the guide-roll and the suction boxes will be supported at the corresponding pitch and at different elevations, as one is behind the other.

Q77. In the testimony of plaintiff's expert, Mr. Aldrich, reference has been made to the Eibel process or method. I note a reference to Eibel, for instance, in the answer to Q4 in the sentence reading as follows:

"It is primarily with the first section, that is, the sheet-forming section known as the Fourdrinier part or wet end of the machine, that the Eibel process is concerned," etc.

Do you find anything in the Eibel patent purporting to describe or set forth a new or improved process or method? A. No, nothing but an alleged new machine.

Q78. If the Eibel patent in suit is to be looked upon as descriptive of an arrangement and mode of operation such as used by the defendant in its machines, either as described by plaintiff's or defendant's witnesses, how does this Eibel patent compare with structures such as those disclosed in the Barrett & Horne patent, No. 691,333; the Bayless machine, as represented by your diagrams Nos. 5 and 6; the Bagley & Sewall machine, as represented by your diagram No. 9; the Kimberly-Clark machine, at Kimberly, as represented by your diagram No. 7; the Kimberly-Clark machine at Niagara, Wisconsin, as represented by your diagram No. 10; the Palmer Falls machine, as represented by your diagram No. 11; the Lisbon Falls machine, as represented by your diagram No. 8; and the Pejepscot machine, as represented by your diagram No. 14? A. As thus viewed, the Eibel patent cannot be distinguished from these various installations. The most that can be said, if anything, is that it involves a difference of degree in some of the factors which go to make for the acceleration of the stock to the speed of the wire. The three factors which always have been working in this acceleration, i. e., the head, the drag of the wire, and the pitch, are still utilized in the Eibel patent (thus viewed), and it remains simply a question of the proportions in which these several factors enter into the particular installation—a mere matter of percentages based upon no structural change whatever and no difference in mode of operation or principle of operation—simply a question of to what extent the machine is adjusted so as to bring the one or the other factor into greater or less prominence.

If the Eibel patent is considered as involving the entire elimination of any drag of the wire and the development of the factor of the acceleration due to pitch of the wire to a point where the entire acceleration is substantially due to this one factor, then something might be said about a difference in mode of operation at least, although here again you simply have the development of the same mechanism to one of the obvious limits

of its possibility. This total elimination of drag and practical reliance upon the pitch of the wire for the acceleration of the stock, however, requires, as I have pointed out, a very exaggerated pitch, such as I have illustrated in my diagram No. 1—several times as much pitch as defendant employs; and with any ordinary amount of pitch such as that found in defendant's machines or even such as that found in the number of prior art installations mentioned in your question, the situation drops back to the utilization of all three factors, as I have said, and to substantially the same mode of operation in Eibel (thus viewed) as in these prior art machines.

Q79. Can you conceive any process of reasoning or way of considering the Eibel patent as including the defendant's machines within its scope without also including the structures of the Barrett & Horne patent, No. 691,333, and other structures mentioned in my last preceding question as represented by the diagrams that you have prepared? A. No, I cannot.

Q80. Can you conceive any process of reasoning or any way of considering the structure of the Barrett & Horne patent, No. 691,333, and other structures in my Q78, as represented by your diagrams, as not within the disclosure of the arrangement and scope of the Eibel patent without at the same time excluding the defendant's machines from such patent? A. No.

Q81. Has your attention been called to a book published by the Lockwood Trade Journal Company, incorporated, of New York, entitled "A History of Paper-Manufacturing in the United States, 1690-1916," the author being Lyman Horace Weeks? A. Yes, I have seen this book.

Q82. This book appears to have been published in 1916. I wish you would quote, for the record, the statement appearing on page 316 in reference to the production of newsprint paper from 1870 to 1915.

Mr. Lyman: Objected to as hearsay.

A. I quote the part referred to as follows:

> "The news print branch of paper-manufacturing has been largely a development since the civil war. Before that period cheap paper was not possible in the absence of wood-pulp; and the enormous size and circulation of modern newspapers were unknown. About 1870 the daily production of news print amounted to one hundred and thirty tons, the maximum in any one mill being nearly ten tons. Since that time the daily ton product of all the mills of the country has been in successive years approximately as follows: 1880, four hundred; 1890, seven hundred; 1900, one thousand nine hundred; 1905, three thou-

sand; 1909, four thousand; 1915, six thousand."

Q83. I wish you would also quote a statement appearing upon page 294 in reference to the increase in speed of the Fourdrinier machines.

Mr. Lyman: Objected to as hearsay.

A. I quote the part referred to as follows:

> "Not long after this, in 1880, a Fourdrinier was built for the mill of P. H. Glatfelter, in Spring Forge, Penn., that had a speed of two hundred feet per minute. From that time on the pace was steadily increased until, before 1897, machines one hundred and sixty inches wide had been built, an increase of sixty per cent in thirty years. There were four mills equipped with machines capable of making merchantable news-paper continuously at five hundred feet per minute, an increase of four hundred per cent in the thirty years that had elapsed since 1867. Those four were in the plants of the Glens Falls Paper Mill Company of Glens Falls, N. Y., the Hudson River Pulp and Paper Company of Palmer's Falls, N. Y., the Glen Manufacturing Company of Berlin, N. H., and the Willamette Pulp and Paper Company of Oregon City, Ore."

Direct examination closed.

(The diagrams produced by the witness and heretofore marked "Defendant's Exhibit W" are offered in evidence by counsel for the defendant, marked as directed. The exhibit is objected to by counsel for the plaintiff as being hypothetical and based on no machines or modes of operation proved in the case.)

CROSS EXAMINATION.

By Mr. Lyman:

XQ84. Which of the various machines illustrated on your diagrams most nearly approximates the machine described by the Eibel patent, as interpreted by you? A. Leaving out the flat wire Champion machine, diagram No. 15, I do not think I would attempt to distinguish between these several installations in respect to their resemblance to the Eibel patent. They all operate about alike, and once you get away from the Eibel theory of eliminating drag entirely and putting substantially the whole work of acceleration on the pitch of the wire, it makes no particular difference, so far as I can see, whether a machine involving all three factors of head, drag, and pitch of the wire in the acceleration of the stock, utilizes any particular factor a few per cent more or a few per cent less than any other factor. If the Eibel patent is regarded as including such structures as defendant's installation where the drag of the wire is always present to a material extent and where the

action of gravity due to the pitch of the wire is but a small factor in the acceleration of the stock, at the most not more than approximately 25 per cent, then I am unable to distinguish between the Eibel patent and any of these machines which I have depicted in my diagrams in which the percentages of velocity due to pitch vary up to about 25 per cent and in which the drag of the wire is eliminated to quite as great an extent as, for example, in defendant's structures.

The Bayless machine, made under the Barrett & Horne patent, as illustrated in my diagrams Nos. 5 and 6, the Palmer's Falls machine illustrated in diagram No. 11, the Kimberly-Clark (Niagara) machine illustrated in diagram No. 10, and the Pejepscot machine illustrated in diagram No. 14, I regard as excellent illustrations of just what the Eibel construction and mode of operation come down to if the Eibel patent is to be applied to defendant's structure.

Of course, if we are to view the Eibel patent as calling for an amount of pitch such as to put the entire work of accelerating the stock on the action of gravity due to pitch of the wire, as illustrated in my diagram No. 1, then none of the actual installations mentioned by me or shown in my diagrams disclose a pitch of this degree or even approach it very closely. But so far as I know, no actual installation with anything like this degree of pitch (54 inches for a 70-foot wire) has ever been used. It remains purely a matter of theory with Eibel.

XQ85. According to your understanding, then, the invention which the Eibel patent purports to describe has never been put into practical use by anybody. A. So far as I know, the arrangement and mode of operation set forth in the Eibel patent in suit have never been put in practical use by anybody. The various installations which have been called Eibel installations can readily be shown, on analysis, to fall far short of accord with the disclosure of the Eibel patent in what I regard as the gist of his alleged new principle of operation, to-wit, the running of the wire on a pitch such as to bring about the acceleration of the stock solely by gravity due to the pitch of the wire, eliminating drag completely, and regardless of head, which is intentionally maintained at the lowest possible limit.

XQ86. It has been testified in this case that, following the making of his invention, Eibel organized the machines at the Rhinelander Paper Company, of which he was superintendent, in such a way that they had a pitch of about 14 inches and ran at a speed of between 500 and 600 feet per minute. Is it your position that that arrangement and mode of operation did not embody the invention described in the claims in the Eibel patent?

A. Certainly, it did not. To obtain a wire speed of, say, 500 feet per minute by acceleration due to pitch it would be necessary to have the breast-roll elevated above the guide-roll 39 inches, instead of 14 inches which your question recites. If the speed was 550 feet per minute, it would require an elevation of nearly 48 inches to bring about the desired result. This assumes a 70-foot wire and that the equalization of stock and speed occurs 9 or 10 feet from the slice, or about one-third the way down the wire.

XQ87. Am I to understand from your testimony that there is no one of the machines illustrated on your diagrams which more nearly approaches the construction and mode of operation disclosed in the Eibel patent, as you understand it, than, for example, the Lisbon Falls machine, illustrated in your diagram No. 8? A. There are other installations shown in these diagrams where the feature of the low head is more nearly approached, if the Eibel patent is to be regarded, as I actually do regard it, as contemplating the lowest possible head. Of course, this Lisbon Falls machine is capable of being operated with a low head if desired; but the 6-inch head illustrated in the diagram of this machine is considerably greater than the minimum head which might be used.

XQ88. Is the Bayless machine indicated in your diagram No. 5 as close an approximation to the construction and mode of operation of the machine described in the claim in the Eibel patent as any of the various machines shown in your diagrams? A. I think so, on the whole. I find it pretty difficult to come to any definite conclusion on this point since each of these installations varies from each of the others in regard to some of its particulars, and may be closer to Eibel in some detail and not so close in others. It is therefore more or less conjectural just which elements of this comparison should control, especially as the Eibel patent, as I understand it, describes an installation which, if not wholly impracticable, has never been actually put in practice. Of course, if we consider the Eibel patent in the meaning which it must have if applied to defendant's structure, or, in other words, as interpreted by defendant's machines which, in the plaintiff's view, are constructed in accordance with the Eibel patent, then the comparison with the prior art structures illustrated in my diagrams would become much easier. But I understand your question to eliminate this view of the Eibel patent since I have already expressed it as my own view that the Eibel patent is not embodied in defendant's structure and since you have limited your comparison, as I understand your question, to the Eibel patent as I understand it.

XQ89. I will ask you, then, which of the machines shown on your diagrams most nearly approaches in construction and mode of operation the defendant's machines in issue in the case? A. The Pejepscot machine, diagram No. 14.

XQ90. I take it, then, that you regard that Pejepscot machine as the closest approximation of any of the machines shown on your diagrams to the machine and mode of operation disclosed and claimed in the Eibel patent, if it be assumed that the defendant's machines embody the invention described and claimed in the Eibel patent? A. Yes.

XQ91. And can you name that one of the machines shown in your diagrams which, next after the Pejepscot machine, approaches most nearly to the construction and mode of operation of the defendant's machines and construction and mode of operation of the machine described and claimed in the Eibel patent, on the assumption that that patent is embodied in the defendant's machines? A. I should say Lisbon Falls, diagram No. 8, Palmers Falls, diagram No. 11, Bagley & Sewall, diagram No. 9, and Niagara, Wisconsin, diagram No. 10, would rank in this comparison in the order named.

XQ92. And on the view that the Eibel patent is to be interpreted in the manner in which you interpret it, may we assume that, in your view, there is no one of these machines nearer to the Eibel construction and mode of operation than the Bayless machine? A. Yes, I think that is true.

XQ93. You have read the evidence taken in the case up to date? A. No; only the evidence of plaintiff's witness, Mr. Aldrich, and some parts of the evidence relating to defendant's machines—those parts which describe the construction.

XQ94. Will you explain why it is that you regard the Pejepscot machine as the closest approximation to the defendant's machines? A. In the first place, the Pejepscot machine is a high speed machine working on news, like the defendant's machines, and working under a very similar head, 5 inches, as compared with 6, and under such conditions as to pitch, speed, etc., as to bring about very comparable proportions of the acceleration of the stock due to the several factors of head, pitch and drag. Taking defendant's machine as illustrated by diagram No. 3, for example, I find the speed of wire to be 585 feet per minute; the velocity of stock due to head 330 feet per minute; the velocity of stock due to pitch 118 feet per minute; and the velocity of stock due to drag of wire 137 feet per minute, with the percentage of total velocity due to pitch 20 per cent. The same figures on the Pejepscot machine I find to be, respectively, 490, 295, 85, 110 and 17 per cent; and, making allowance for the

fact that defendant's machine runs somewhat faster than the Pejepscot machine, I think these results about match up. The net pitch on defendant's machine is 4½ inches and the net pitch on the Pejepscot machine 2⅝ inches.

XQ95. When was it that you examined the Bayless machines? A. On November 13, 1917.

XQ96. Was there blocking under the supporting posts of those machines at that time? A. Yes The No. 1 machine was blocked up between 7 and 8 inches. That was the machine that had been destroyed by the flood and rebuilt and changed to such an extent that I paid no further attention to it. The other machine was said to have been as originally constructed, the No. 2 machine, and for that reason I confined my attention to that machine.

XQ97. What blocking was there under No. 2 machine? A. No. 2 machine had a 4-inch block under the breast-roll and about an inch block under the middle standard.

XQ98. Was there blocking under the middle standard of the No. 1 machine, or didn't you notice? A. I don't remember about that machine. I should say yes.

XQ99. Can you tell us briefly why it is that you regard the Lisbon Falls machine as, next after the Pejepscot machine, the closest approximation to the defendant's machines? A. It is simply a question of matching up the various factors of the head, pitch, speed and comparative results in repsect to the operation of the machines, particularly as to the proportions of the velocity of stock acceleration due to the several factors of head, pitch and drag of wire. Sizing all these things up, I mentioned the Lisbon Falls next, although there is not very much difference between that and the Bagley & Sewall machine, or the Palmer's Falls machine, or the Niagara machine, for that matter.

XQ100. When was it that you saw the Pejepscot machine in operation? A. Two days before Thanksgiving, 1917.

XQ101. By what means was the pitch of that wire obtained? A. By a block under the breast-roll standards.

XQ102. Five inch block? A. I don't remember just the size of the block. It was a block which gave a 5-inch pitch to the wire; it might have been 4 or 4½ inches.

XQ103. How did you measure the pitch? A. I measured the pitch by a surveyor's level or, rather, a stadia instrument, to be exact.

XQ104. You determined the vertical height of the top of the breast-roll above the vertical height of the top of the guide-roll? A. A stadia is simply a modified form of surveyor's

transit which also can be used as a level. The stadia feature relates to measurement of distances by certain wires in the telescope and may be ignored so far as my use of the instrument was concerned. I simply use it as an ordinary surveyor's level to measure the height of the topmost surface of the breast roll in comparison with the height of the first suction box and with the height of the top of the guide-roll. The suction box and guide-roll were level, and the 5-inch pitch occurred entirely between the breast-roll and the suction box.

(Adjourned.)

Room 607 Old South Building, Boston, Mass., Saturday, January 5, 1918.

Met pursuant to adjournment. Present as before.

Cross examination of Henry W. Carter resumed.

By Mr. Lyman:

The Witness: I want to add something to my last answer given just before adjournment last evening. I stated in this answer that I used a surveyor's instrument called the stadia, in measuring the pitch of the wire at the Pejepscot mill. I afterwards recalled that it was at Lisbon Falls, and not at Pejepscot, that I used the stadia. These two mills are operated by the same company, and are not far apart, and I inspected them on the same day. The Lisbon Falls mills I used the stadia, and it was this that I had in mind when I answered as I did, with regard to the Pejepscot. At the Pejepscot mill I made use of an ordinary 5-foot folding rule, for the purpose of measuring the levels at the breast roll, first suction box and guide roll, from the foundation which I assumed and judged to be level.

XQ105. You did not come to any determination as to whether that foundation was level or not? A. No.

XQ106. You have, in your diagrams, assumed conditions of speed equality at the points one-third of the distance from breast roll to guide roll. Should that point be the same, regardless of the length of wire of the machine? A. As nearly as I have been able to determine from my inspections of the various machines examined by me, this is the fact—that regardless of the length of wire, the point of smooth-out, which following the plaintiff's witness, Mr. Aldrich, I have assumed to be approximately the point where the speed of stock reaches the speed of the wire, is approximately one-third the distance down the wire from the breast roll to the guide roll. I don't know that I can give you any better answer than this, to your inquiry. I would not undertake to say whether this should or ought to be the fact, but simply that it is the fact, according to

the best of my observation.

XQ107. Wouldn't it seem more natural that the point of speed equality should be governed by other conditions than the length of wire, and should be independent of the length of the wire? A. I don't say that it isn't governed by the length of the wire, and it may be independent of the length of the wire, so far as I know. All that I am able to state is that my observation of existing practice in paper machines, indicates that whatever factors may govern the point of smooth-out, it actually occurs at a point approximately one-third the distance down the wire.

XQ108. Well, now, you didn't quite answer the question, I think.

(Last question read.)

A. I am unable to state as to whether other factors than the length of the wire would more naturally govern the point of speed equality. It struck me as probably governed largely by the practice of the paper-maker, and I do not pretend to be posted in paper making, or to speaking in this connection otherwise than as familiar with certain mechanical features and operations of the machines as used.

XQ109. Do you mean to testify, or do you not, that the point of smooth-out and speed equality must necessarily occur at a point one-third of the distance down the wire, or thereabouts, if good paper is to be made? A. Certainly not. I think it is evident that the point of smooth-out, or, in other words, the point where the accelerating stock reaches the speed of the wire, must occur before the first suction box is reached. And my observation is, as stated, that in practice this point occurs approximately one-third of the distance down the wire, which is usually about halfway between the breast roll and the first suction box. As to whether good paper could be made by running the machine under conditions which would advance or retard the point of smooth-out, however, I have no experience which will enable me to state.

XQ110. You do not know, then, whether good paper could be made if the point of smooth-out or speed equality between stock and wire took place say one-half of the distance from breast roll to guide roll, or two-thirds of the distance from breast roll to first suction box? A. No.

XQ111. By what means did you determine the point of speed equality between stock and wire, on these various machines which you examined? A. To start with, I had the statements of plaintiff's witnesses Gray and Aldrich, that the point of speed equality in defendant's machines, occurred at 9 to 10

feet from the slice, as indicated by the smoothing out of the ripples and waves which were noticeable at the breast roll end of the wire. And when I came to examine these machines, I observed just this phenomena which they spoke of, and found that it was substantially as they represented. Then, in examining other machines, I had the same phenomena in mind, and looked for the same point of smoothing out of the ripples and waves which occurred at the breast roll end of the machine, and noted the distance from the breast roll and slice. I judged the matter by my eye. I had no other means of determining.

XQ112. Was this point where the sheet smoothed out a sharply defined point, or not? A. No.

XQ113. Do your figures on this point purport to be precise, or are they subject to some variation, according to the observer? A. I would not call them precise. I think the matter is one on which observers might differ. I do not think, however, that there would be much difference in the conclusions of different observers, in judging of the point of smooth-out or speed equality, on different machines, in comparison with a given machine; as for instance, defendant's machine. That is to say, if in defendant's machine the characteristic appearance of the surface of the stock at a point 9 to 10 feet down the wire, is to be taken as the point of speed equality, then that same characteristic appearance would, in my judgment, be located with approximate accuracy by different observers, on other machines.

XQ114. I take it that you would not care to make the positive statement then, that the point of speed equality on the defendant's machines, as you observed them, operating as you observed them, was between 9 and 10 feet down the wire, from the breast roll. A. No, as to that I have accepted the authority of the plaintiff's expert, and have assumed that the smoothing out of the waves which did occur substantially at a point 9 to 10 feet down the wire, did indicate the coming of the stock to the speed of the wire. The proposition that the waves would smooth out as the result of the equalizing of the speed of stock and wire, struck me as a perfectly reasonable one, and I had no hesitation in accepting the theories of plaintiff's experts in this regard. I have not, however, made any tests of my own, to determine this fact.

XQ115. You don't know whether any tests have been made, of the defendant's machines? A. No. If any such tests have been made, I am not aware of it.

XQ116. Do you regard it as possible that if tests were made they would show that the point of speed equality in those ma-

chines, operated as you saw them operating, was farther down the wire or nearer to the breast roll than the point which you have assumed? A. I regard it as improbable. As to whether it was possible or not, I could not state.

XQ117. Is it possible that that point might have occurred as much as two or three feet nearer or farther than the point which you have assumed? A. I don't know whether it is possible or not. I do not know that it is impossible. I simply have no further information on the subject than that which I have given you.

XQ118. On the matter of the appearance of the sheet, as to smoothing out, is it possible that other observers of those machines of the defendant would place the point of smoothing out as much as a couple of feet farther down the wire or nearer to the breast roll than you do? A. I think that is possible.

XQ119. Did other witnesses examine those machines at the time you did? A. Yes.

XQ120. Who? A. I don't know, except that Mr. Paul was with me. That is to say, I do not know the names of the parties present. They were persons connected with the defendant company at that particular plant—the superintendent, foreman, machine tenders, and so forth.

XQ121. What would be the effect if the point of speed equality occurred prior to the point where the stock has become sufficiently drained so that it is substantially felted to the wire, so that it would have no further possibility of moving at a different rate of speed from the wire. A. Theoretically this would have the effect of causing the stock to run faster than the wire, between the point at which speed equality between stock and wire has occurred and the "felting" point, which your question assumes. As to whether this tendency would be appreciable in practice, under any conditions of pitch which I have observed, I have my doubts. The mere existence of a tendency is no indication whatever of practical results. For example, there is a tendency for a book lying on the table to break the table; but we do not pay much attention to this tendency, in actual life. Just so with regard to this tendency of the stock to overrun, under the conditions assumed. With any amount of pitch which I have had my attention called to, and the most extreme of which is the 13½ inch pitch employed in the defendant's machine, the matter of two or three feet one way or the other, along the slope of the wire, is hardly appreciable, as can be readily demonstrated by figures.

XQ122. If, however, there were such overrun, it would cause renewed disturbance on the wire at its critical point,

would it? A. Theoretically, it would. Practically, I do not believe it would cause any renewed disturbance which could be discernible under any conditions of pitch which have been called to my attention.

XQ123. In your last answer but one, you said that the statements which you made could be demonstrated by figures. Will you please illustrate. A. I will do this as follows: In figuring the factors entering into the acceleration of the stock to the speed of the wire, in Diagram No. 3, illustrating defendant's machines, as I saw them operating, with a total pitch of 13½ inches, and under a head of six inches, I assumed the point of speed equality between stock and wire at one-third the distance down the wire, or, to be exact, 9 feet 8 inches from the slice.

If now I assume a point only one-quarter the distance down the wire, which would be 7 feet and 3 inches, instead of 9 feet 8 inches from the slice, I find that the speed of the stock at this point would be only 20 feet per minute less than the speed of the stock one-third the distance down the wire, or about 4 per cent. In other words, the speed to which the stock would have been accelerated by traveling one-third of the distance down the wire, will only be approximately 4 per cent greater than the speed to which the stock would have been accelerated by traveling one-fourth the distance down the wire, the head in the flow box being the same in each case—six inches.

Or, on the other hand, even if we assume a point one-half the distance down the wire, or 14½ feet from the slice, I find that the increase in velocity of the stock due to the approximately 5 feet of travel from the point one-third the way down the wire, will be less than 50 feet per minute, or approximately 10 per cent of the speed obtained at the one-third point.

My method of calculation in each case is that which I have already explained. That is to say, I figure the total drop or fall from the surface of the water in the flow box to the level of the assumed point on the wire. In the case of the point one-third the distance down the wire, this gives a total drop or fall of 10½ inches which, according to the velocity tables given in the engineering handbook, corresponds with a velocity of approximately 448 feet per minute. If the point is taken one-fourth the wire, the total head becomes 9⅜ inches, instead of 10½ inches, and 9⅜ inches will produce the velocity of flow of approximately 428 feet per minute. If the point is taken one-half the distance down the wire, the total head becomes 12¾ inches, which, according to the velocity tables, will produce a velocity of flow of approximately 495 feet per minute.

XQ124. What do you infer from these figures? A. My deduction from such calculations is that the matter of two or three feet on the slope of the wire, makes very little difference in the speed or flow of the stock.

XQ125. And from that deduction what further inference do you draw that is pertinent to the previous answer, which led me to ask you to make these calculations. A. I take it that you have reference to the question of whether or not there would be a visible re-formation of wave, due to inequalities of speed between stock and wire, under the conditions assumed by you; to-wit, that the stock continued in a fluid condition after reaching the point on the slope where the speed of the stock equals the speed of the wire.

I believe my answer was that while there would be a tendency to reform such waves, I doubted if it would be discernible to the eye; and the results shown by the calculations which I have just recited, point to this conclusion.

XQ126. The aim should be, however, should it not, to produce that point of speed equality at substantially the point on the wire when the stock loses its fluidity and becomes substantially felted to the wire? A. Without having had any experience in paper making, I should say that it was reasonable to assume that any appreciable flow of the stock faster than the wire, should be prevented. And in theory this would indicate that the speed equality in stock and wire should not occur until the stock has so far parted with its water as to be incapable of having any appreciable movement, independently of the wire, beyond the point of speed equality. As to whether anything which could be called an actual "felting of the stock" upon the wire would be necessary in order to prevent relative motion between stock and wire, I am unable to express an opinion. I have not had any experience that would enable me to express an opinion as to just what this felting action is, or just when it is brought about.

XQ127. The point on the wire where the stock loses its fluidity depends, does it not, upon the time which the stock has been on the wire previous to reaching that point? A. I should think that would be true, under any given set of operating conditions.

XQ128. And that, again, depends, does it not, upon the head under which the stock is flowed upon the wire, upon the pitch which the wire has and upon the speed of the wire? A. All those factors would enter into the problem, and I should think that probably others, such as the character of the stock, the manner in which it is supplied to the wire, and perhaps other

factors, which would be known, probably, to paper makers.

XQ129. Then this point where the stock loses its fluidity and where speed equality should be brought about, depends, does it not, upon the head behind the slices, upon the pitch of the wire, and upon the speed of the wire; and other conditions being equal, it will be farther down the wire in the case of a machine having a high head behind the slices, a high pitch to the wire, and a rapidly moving wire, than in a machine in which the head is lower, or the pitch is lower or the speed lower? A. I am unable, from lack of experience in paper making, to give any definite answer to this question. The factors here involved are too variable and too much questions of actual practical conditions in paper making.

My own observations do not give me sufficient information to more than speculate upon such an inquiry as this. The point of smooth-out actually noted by me, which was furthest from the slice, was on the Champion wire, which is absolutely flat, and has no pitch at all. On the other hand, the point of smooth-out closest to the slice, which was actually noted by me, is that of the Cliff Paper Company, which has a marked pitch —of 4¾ inches in 16 feet, which would be equal to nearly 9 inches on a 70-foot wire. So far as my own observations go, I conclude that paper makers, whatever their reasons for so doing, generally operate their machines in such a way as to bring about the point of speed equality at about the same proportionate point on the wire, that is to say, about one-third the distance down the wire.

XQ130. How did you determine the wire speed on the defendant's machines? A. By counting the revolutions of the lower couch roll and figuring the speed due to that number of revolutions for the given diameter of roll. According to my recollection, I counted 80 revolutions per minute, and the speed figured approximately 586 feet. I might have been off a very little in counting the revolutions of the roll, as I was simply checking up the statements made by the superintendent and did not attempt more than approximate accuracy. But am satisfied that my results were within two or three feet one way or the other.

XQ131. Referring to your Diagram No. 1, you assumed zero velocity as the stock enters on the wire, did you? A. Yes.

XQ132. Is that practicable? A. I do not know. Mr. Aldrich, plaintiff's expert, apparently thinks that it is. That is to say, he states that the Eibel patent may be used without any initial velocity whatever in flowing the stock on to the wire. Or at least that is my recollection of his testimony. I

refer to his answer to XQ230, in which he states that "the Eibel invention can be employed without any head at all."

The only way in which I have been able to conceive of its being possible to *operate without any head at all, however, is* by introducing the stock to the wire on the back side of the breast roll before the top of the roll is reached, and, whether or not this would be practicable, I am not enough of a paper-maker to state. So far as my observation of paper machine practice goes, I should say that some initial head must always be involved in the flowing of the stock on to the wire.

XQ133. What is the minimum initial head that you would think necessary? A. That is a question which must be governed by the practical conditions assumed. I have seen machines operated with as low head as one inch; but the speed in the machine, the character of the paper, and the amount of stock required, all enter into this problem of the minimum possible head. It is a general rule, I should say, that the head must be a little greater than the thickness of the stream of stock which it is necessary to flow upon the wire. The slice, in other words, must dip below the surface of the stock behind the slice far enough to hold back the chips, froth, etc.

XQ134. What thickness of stream did you assume in your Diagram No. 1 to be issuing on to the wire under the slice? A. I have made no assumption in that regard. I simply assumed in Diagram No. 1 that the stock was supplied at zero velocity.

XQ135. And you think it is immaterial what the thickness of the stream of stock is, do you? A. I think it is immaterial to that assumption. That is to say, if we assume the stock is supplied to the wire at zero velocity, my conclusions, represented in Diagram No. 1, will be the same regardless of the thickness of the stream of stock.

XQ136. Your Diagram No. 1 is supposed to represent operative conditions, is it not, on a machine that will make paper? A. No, my Diagram No. 1 is simply supposed to represent the disclosure of the Eibel patent exactly as he sets it forth. So far as I know, this disclosure has never been reduced to operative conditions.

XQ137. You understand, then, that the Eibel patent, fairly interpreted, means that the stock must issue upon the wire at zero velocity? A. I should say, rather, that the fair interpretation of the patent would be that which would confine the velocity of the stock as it issues upon the wire to the minimum practical under operating conditions. As I have already pointed out, Eibel ignores the factor of the velocity of the stock as

it issues upon the wire and apparently assumes that there is no such factor. He discusses with great particularity the question of drag and the effect of pitch in accelerating the stock so as *to overcome the drag of the wire, but fails utterly to mention* at all the factor of the initial velocity of the stock which, under any actual conditions that I have been called upon to observe, is the greatest factor of all in accelerating the stock and in overcoming the drag of the wire. Even in the case of defendant's machines with a 13½-inch pitch, or even assuming a 14 to 15-inch pitch as testified to by plaintiff's witnesses, the velocity of stock due to head is more than half the total velocity which it ultimately acquires, or, in other words, more than half the speed of the wire, and this factor of velocity due to head is very much larger than any other factor—for instance, the factor due to pitch.

And, in view of this fact that the Eibel patent ignores the factor of head entirely, while discussing so fully the other two factors involved in the acceleration of the stock, I think it fair to conclude that his intention was to at least employ no greater head than absolutely necessary for the operation of a paper machine.

And while my Diagram No. 1 follows the letter of the Eibel patent in ignoring head entirely, it will be understood, as I have already pointed out, that if a minimum head such as might be employed under actual working conditions were to be used, it would not make the diagram noticeably different. That is to say, it would only reduce the pitch from 4½ to 4 feet, approximately.

XQ138. Is the minimum head which you assume there a head of 2 to 3 inches? A. Yes, for the purposes of this computation I assumed as a minimum the head which would give an initial speed of stock of 200 feet per minute, which Mr. Aldrich has placed at 2¼ inches.

XQ139. Do you think that the Eibel patent contemplated using at least a head of 2¼ inches? A. I think the Eibel patent may fairly be said to contemplate using whatever minimum head may be necessary to the actual working of the paper machines; but as to whether 2 to 3 inches is the minimum which would be possible, I am unable to state. I doubt if any less head would be possible with a machine running as fast as I have here assumed, that is, 585 feet per minute wire speed—referring to Diagram No. 1.

XQ140. The stock must necessarily issue upon the wire at some velocity, must it not, if the machine is to work? A. I have already told you that I am unable to answer that ques-

tion. I have quoted Mr. Aldrich to the effect that the Eibel invention may be employed with no head at all, which means no velocity, and I have explained my speculation as to the possibility of introducing the stock at a point on the back side of the breast roll with this in view.

As I said before, however, my own observation of the working of paper machines would indicate that practical conditions require the flowing of the stock upon the wire at some initial velocity. I have not been able to figure in my own mind any practicable arrangement by which this would be avoided.

XQ141. Assuming that the stock is flowed upon the wire in a machine arranged according to your Diagram No. 1 at a speed of 200 feet a minute, which speed, I take it, is, in your view, as low as initial velocity as could probably be used, what thickness of stream would be necessary at the point where the stream issues from the slice? A. I should expect from what I have observed that the opening beneath the slice, with such low head, would require to be pretty well up towards 2 inches; and if so, the thickness of the stream will be that which would result from flowing out through the opening thus provided.

XQ142. That would be a stream two inches in thickness? A. No, a 2-inch orifice would not produce a stream 2 inches in thickness. The resulting stream would not be over about three-quarters of this thickness. When water flows out through an orifice, the stream narrows up as it leaves the orifice.

XQ143. That is, the thickness of the stream would be about an inch and a half in that case? A. An inch and a half to an inch and three-quarters, I should say. Possibly, an even thicker stream might be required. It is simply a question of how thick a stream is necessary to get the desired volume of water under the wire to supply the paper-making needs of the wire running at that speed.

XQ144. The faster the wire the thicker the stream must be, must it not? A. Assuming the same initial head, yes.

XQ145. What was the height of the slice opening on the defendant's machines when you examined them? A. I did not measure the slice opening. My recollection is that it was about an inch and a half.

XQ146. That would produce a stream issuing upon the wire having a thickness of an inch and a quarter, or thereabouts? A. About that, yes.

XQ147. And that stream issued at the rate of 330 feet per minute? A. Yes.

XQ148. Now, the machine shown in your Diagram No. 1, having its wire running at the same rate of speed as the de-

fendant's machines, would require an equal amount of stock to be flowed upon the wire per minute, would it? A. Yes.

XQ149. If that stream issued upon the wire of the machine in your Diagram No. 1 at the rate of 200 feet per minute, it will have to be 330/200 as thick as the stream issuing upon the defendant's machines, would it not? A. Yes.

XQ150. That is to say, a little over 2 inches thick? A. Yes, practically 2 inches.

XQ151. That would require how much of a slice opening? A. At least 2 inches, probably 2¼.

XQ152. From your previous answer I should judge it would require an opening of 4/3 as thick as the thickness of the stream, which would be nearly 3 inches? Am I wrong? A. About 2½ inches, I should think.

XQ153. Have you ever seen a slice opening that deep? A. No.

XQ154. Supposing the stock were to issue upon the wire in your machine in your diagram at 100 feet per minute instead of 200 feet per minute, and were to make paper with the wire running 585 feet per minute, that would mean, as I figure it, that the stream of stock would have to be 330/100 of 1¼ inches, or about 4 inches; is that correct? A. If we are accurate in our assumption that the 330 feet per minute at which the stock issues on defendant's machines, requires a stream 1¼ inches thick, that is correct. I do not pretend to vouch for the accuracy of this statement. I did not measure the slice opening in defendant's machines, and am simply giving my impression of what I saw there in that respect.

XQ155. Supposing that this stock were flowed upon the wire in the machine in your Diagram No. 1 under a 2¼ inch head, the initial speed due to head would be about 200 feet per minute, according to your figures, would it? A. No, not if the slice opening were large in proportion to the head. For instance, the 2 inch slice opening with a 2¼ inch head would not give a speed of 200 feet per minute. This is because the average depth of the stock would not be great enough to result in a speed of 200 feet per minute. This velocity of 200 feet per minute is what the tables give for the net head of a little over 2 inches. The actual head would have to be somewhat greater in order that the average velocity of the stock should equal this amount. I mention 2¼ inches as being what Mr. Aldrich has referred to as the head necessary to give 200 feet per minute initial velocity. What I actually calculated on was the 200 feet per minute initial velocity and not the exact amount of head which produces it. Actually, this head would

be somewhat greater than 2¼ inches, undoubtedly; it might be three inches.

(Noon recess.)

Afternoon session.

XQ158. What is the thickness of the stock on these machines inspected by you, at the point where speed equality is obtained? A. I do not know.

XQ159. Can you estimate it? A. No.

XQ160. You have referred to this Eibel patent No. 851,227. Was it your understanding that in that patent Eibel contemplated the stock issuing upon the wire at zero velocity? A. No, it would be impossible, with the arrangement which he here shows, and for that matter, with any arrangement which I have been able to conceive of as practicable. He simply attempts, in this patent, to keep the initial velocity as low as possible, and to provide a construction of flow box which he says will operate to this end.

XQ161. Which of the defendant's machines did you illustrate in your Diagram No. 3? A. This diagram is intended to represent defendant's machines 1, 3 and 4, as I inspected them in November. Defendant's No. 2 machine had been lowered to a different pitch when I was there. That is to say, I was told that it had been lowered, and found that it was operating with a total pitch of substantially 6 inches, as against 13½ inches, at which I found the other machines to be operating.

XQ162. How did you measure the amount of head on the defendant's machine? A. With an ordinary ruler, by sticking it down in the flow box.

XQ163. At what part? A. Somewhat back of the slice. I don't know that at any particular point. The stuff in the flow box was practically level for a couple of feet back of the slice.

XQ164. I notice that in the diagrams 1 and 2, you have placed the slice directly over the breast-roll. Is it your understanding that that was the customary construction at the time, of the Eibel patent? A. It was one of the customary constructions, although perhaps the putting of the slice somewhat beyond the breast-roll—down the wire, was more common, as I understand it. The latter arrangements are shown in diagrams number 5, 6 and 9, for example.

XQ165. What is the basis of your statement that one of the customary ways of building the machine at the time of Eibel's patent, was with the slice directly over the breast-roll? A. Simply the information I have derived from paper makers who have told me that fact. I have no personal information

on that subject.

XQ166. Suppose the slice were placed forward of the breast-roll, that is, down the wire, for instance, a foot and a half or two feet, as shown, in some of your diagrams, how much of a head would it be necessary to carry back of the slice in a case like that, in order to make the machine operate? A. I don't see that this matter of the location of slice has anything to do with the necessary head; but the putting of the slice out over the wire, tends to produce some mechanical difficulties, if a high head is carried. That is to say, the weight of the water over the wires, tends to bend the rollers that support the wire adjacent to the breast-roll.

XQ167. When the Eibel patent uses the expression "substantial elevation," what, according to your understanding, does that mean, by way of the extent of the elevation, in that regard? A. I understand that this expression in the Eibel patent, means such an elevation as will place the work of accelerating the stock to the speed of the wire entirely upon the action of gravity due to the pitch of the wire. Of course it will be understood that the action of gravity due to the head has always been a factor in bringing the speed of the stock up to the speed of the wire. This is true today of all the machines which have been called to my attention, including defendant's machines, and all the machines of the prior art which have been called to my attention. When Eibel speaks of causing the stock to travel by gravity, therefore, he must be referring to something different than the gravity due to head, and I think there is no question but what it is only the gravity due to the pitch of the wire which he is taking into consideration in this expression.

It is by placing the breast-roll end of his paper-making wire at such a substantial elevation as to produce a pitch sufficient to cause the acceleration of the stock under the action of gravity due to the pitch of the wire, and due to this factor only, insofar as practical conditions of operation make it possible, that Eibel operates his machine according to what he states that he believes to be "a new principle of operation."

This is what I understand to be meant by the substantial elevation referred to in the claim of the Eibel patent in suit, and I certainly can not conceive of any elevation being regarded as substantial, which does not result in the development of the action of gravity due to the pitch of the wire, to the extent that renders it the predominant factor, at least, in the accelerating of the stock to the speed of the wire.

XQ168. I judge, then, that you do not find in any of the

machines shown on your diagrams Nos. 5 to 16, inclusive, the employment of a substantial elevation of the breast-roll, as that term is used in the Eibel patent; that is to say, the Bayless machines, the Kimberly-Clark Kimberly machine, the Lisbon Falls machine, the Bagley & Sewall machine, the Kimberly-Clark Niagara machine, the Palmers Falls machine, the King machines, the Northern Paper Mill machines, the Pejepscot machines, the Champion machines and the Cliff Paper Co. machines? A. No, if this understanding of mine of the meaning of the expression "substantial elevation," in the Eibel patent is correct, I do not find in these machines, or in any machine or paper mill installation which I have ever seen, or to which my attention has ever been directed, an elevation of this degree. In none of these machines do I find the action of gravity due to the pitch of the wire to be the predominant factor in the acceleration of the stock to the speed of the wire.

XQ169. Do you attach any different meaning to the words "high elevation" in Claim 2 than you would give to the words "substantial elevation" in the other claims? A. No.

XQ170. Wouldn't an elevation of 6 inches at the breast-roll end of the paper-making wire be a substantial elevation, within the meaning of this patent, other conditions being right? A. Your question will have to include further data as to the assumed machine, or I will have to assume such data before I can form any definite opinion in answer to it. The question of the length of the wire, speed of the wire, as well as the amount of head, has to be taken into consideration in determining what the predominant factor in the acceleration of the stock to the speed of the wire may be.

XQ171. Assuming a 70 foot wire, may a 6 inch elevation at the breast-roll end of the wire be a substantial elevation, within the meaning of the patent? A. No, I am unable to figure out any conditions under which a 70 foot wire with a 6 inch elevation at the breast-roll, could be operated so as to render the action of gravity due to the pitch of the wire the predominant factor in the acceleration of the stock to the speed of the wire. Taking, for example, a 70 foot wire with a 6 inch pitch operating under as low a head as practicable, say one which would give an initial velocity to the stock of 200 feet per minute, the acceleration due to the pitch of the wire figured to a point one-third of the distance down the wire would only be 140 feet per minute, and even if figured half the distance down the wire, it would only be 166 feet per minute. Assuming such a machine was running at a wire speed of 500 feet per minute, the action of gravity due to the pitch of the wire would only account for

less than one-third of the total acceleration of the stock. And any increase of head and speed above those assumed, would simply still further reduce the percentage of acceleration due to this factor of the pitch of the wire.

An actual case in point in this respect is the defendant's number 2 machine, which is now running at a pitch of 6 inches, with an elevation of 6 inches at the breast-roll, and which has a 70 foot wire, these two conditions being the conditions of your question. As actually operating, with a wire speed of 585 feet per minute and under a 6 inch head, the velocity of the stock due to the pitch of the wire is only 65 feet per minute, a trifle more than one-tenth of the total acceleration, the other nine-tenths being made up by the velocity due to the head and that due to the drag of the wire.

In each of these instances the real predominant factor is the velocity due to head. This is equally true of every actual installation which has been called to my attention.

XQ172. What is the length of the wire on the Bayless machine? A. It is 23 feet from the breast-roll to the guide roll. I think it is a 55 foot wire.

XQ173. Could a 6 inch pitch of a 55 foot wire ever be a substantial pitch, within the meaning of the Eibel patent? A. No, not in the sense in which I have understood this term to be used by Eibel, i. e., that of making the pitch of the wire as nearly as possible the only, and at least the predominant factor in accelerating the stock to the speed of the wire.

XQ174. What is the lowest elevation of the breast-roll end of a paper-making wire on a Fourdrinier machine, that in your view could, under any circumstances, amount to the substantial elevation which the Eibel patent refers to? A. Assuming a 70 foot wire running at a velocity of 585 feet per minute, and under the lowest practicable head, sufficient to give an initial velocity of 200 feet per minute, the elevation which must be given the breast-roll in order that the action of gravity due to the pitch of the wire may become the predominant factor in the acceleration of the stock to the speed of the wire, will be 30 inches, and it will be understood that this would barely result in putting 51 per cent of the work on this factor. Under higher heads, the elevation of the breast-roll would grow rapidly greater and with anything above a 5 inch head, it would be impossible to give to the wire a pitch great enough to make the action of gravity due to the pitch of the wire the predominating factor in the acceleration of stock. In other words, a 5 inch head gives an initial velocity of stock equal, substantially, to half the speed of the wire, so that no matter how high the wire

were raised after that, it would be impossible to make the acceleration due to the pitch of the wire a predominating factor. The actual elevation which might be given the wire in such a case, in order to bring the factor of gravity due to the pitch of the wire to its maximum, would be 39 inches.

XQ175. My question was, what was the lowest amount of breast-roll elevation which, under any circumstances, might be the substantial elevation called for by the Eibel patent, and you confined your answer to a 70 foot wire and a speed of 585 feet.

(XQ174 read by stenographer, at the request of the witness.)

A. Unless you permit me to assume some actual conditions, it is impossible for me to give a definite answer to your question, which, I take it, calls for the amount of elevation in figures. There is no formula by which I can make a determination of what the effect of a given pitch or elevation will be, unless I assume definite conditions as to length of wire, speed of wire, and head.

The assumptions which I made in my last answer, to-wit, a 70 foot wire running at 585 feet per minute, were in accordance with ordinary working conditions, such as are involved in this case. And the assumption as to head, was made at first as low as possible, for the reason that the lower the head, the greater the influence of the pitch; the higher the head, the less the influence of the pitch. The answer which I gave you was, therefore, as fair an answer as I am able to frame, and I can not express myself more generally, or except by making specific assumptions as to conditions. I am perfectly willing, however, to make my calculations on any other assumptions as to actual conditions, if you will express them. If you prefer to have me assume a shorter wire and a different speed, for example, I will make my calculations on the basis of any length of wire and any speed you care to inquire about.

XQ176. What is the lowest pitch, the lowest elevation of the breast-roll which will, under any circumstances, be a substantial elevation within the meaning of the patent when you are using a 55-foot wire? Please answer the same question with reference to a 40-foot wire. Assume any speeds you will, at any speeds whatever, any speeds that are practicable? A. If we assume as the lowest practicable head that which would produce initial velocity of stock of 200 feet per minute, which Mr. Aldrich places at a 2¼ inch head, then it would require an 18 inch elevation of the breast-roll in order that the speed of the stock due to the pitch of the wire should equal the initial speed of the stock. At this elevation, in other words, the factors of

the acceleration due to head and acceleration due to the pitch of the wire would be 50-50, the speed of the wire being 400 feet per minute. It would be impossible with this speed and head to make the factor of acceleration due to the pitch of the wire any greater or any more than 50 per cent of the whole. A greater pitch would simply result in making the stock run faster than the wire beyond the assumed point of equalization one-third the way down the wire, which, of course, would be objectionable and simply overdoing the matter.

The only way in which any less elevation than 18 inches could be made to bring the factor of the acceleration of stock due to the pitch of the wire even up to 50 per cent would be to assume a speed slow enough to enable a lower head to be used. And with these slow speed machines the whole problem becomes one to figure out because of the uncertainty of just what the factors would be when very low heads are used. Assuming, for example, that a head of one inch could be used, or a head near enough to one inch to produce the theoretical velocity due to that head, 138 feet per minute, and assuming that the speed of the machine were no greater than 276 feet per minute, then the amount of elevation required to bring the factor of acceleration of the stock due to the pitch up to that due to the one inch head would be nine inches. If the machine ran faster than 276 with this same amount of head, the acceleration due to pitch could be made to predominate by increasing the pitch somewhat over the nine inches mentioned. But as to whether it would be practicable to make paper with a machine running even as fast as 276 feet per minute while using a head of as little as one inch, I am unable to state. Nor do I find it practicable to figure on speeds less than 276 or heads less than one inch.

As nearly as I am able to come to any definite answer to your question, therefore, I should say that a nine inch pitch in machines running at less than 300 feet per minute and with an effective head of one inch so as to produce an initial velocity of 138 feet per minute is the lowest possible pitch which I can determine as being anywhere near the substantial pitch had in mind in the Eibel patent in suit, as I have interpreted that expression.

And in mentioning this pitch of nine inches in this slow speed machine running with an abnormally low head, it would be understood that the factor of the acceleration due to pitch does not actually predominate but merely is brought up to equality with the acceleration due to head, the drag of the wire being eliminated as a factor. For any actual predominance of the factor of pitch over head, higher speeds than 276 and a higher

elevation than nine inches must be assumed.

The responses made in this answer apply equally whether the wire is 40 or 55 or 70 feet, if we assume that the point of equality of speed between stock and wire is reached at one-third the distance down the wire from the breast roll to the guide roll.

XQ177. If I understand you correctly, then, you cannot conceive of any practical working conditions as to length of wire, head, speed of wire, or otherwise in which a less breast roll elevation than nine inches above the level would be a substantial elevation within the meaning of the Eibel patent; is that correct? A. Assuming this meaning to regard the acceleration of stock under the action of gravity due to pitch as the predominant factor in bringing the stock up to the speed of the wire, that is correct, except that I do not answer for the conditions under which I have figured out the pitch of nine inches as being practical conditions at all. I do not think they would be practical conditions for making news, for example.

XQ178. The Eibel patent, in Claim 2, speaks about the "normal speed of the wire." What do you understand that expression to mean? A. It is pretty difficult to determine with any definiteness what this expression means in the Eibel patent, unless we assume some particular character of manufacture, and the patent itself makes no distinction as to the character of paper which can be manufactured in accordance with or by use of the alleged new arrangement and mode of operation which Eibel sets forth.

Normal speed might mean 25 feet per minute or it might mean 500 feet per minute, according to the kind of paper contemplated. Some paper has to be made at a very low rate of speed, and news is made at the highest speed, as I understand it, of any employed in paper making.

I have noted that plaintiff's expert, Mr. Aldrich, assumed this normal speed as being the speed at which news was being manufactured at the time of the Eibel invention, and he has taken this, as I remember it, as 400 feet per minute. As to whether or not this is the normal speed referred to in the Eibel patent, there is, however, really nothing in the patent which enables one to determine.

XQ179. What do you understand to have been the ordinary heads in use in paper making, particularly in news machines, at the time of the Eibel patent? A. I have no personal information with regard to making news prior to the Eibel patent. From the data furnished me in connection with the diagrams which I have prepared, I judge that the heads ran from two or

three to eight inches.

XQ180. Have you any doubt that Eibel contemplated by the use of his machine shown in his patent getting a higher wire speed than 400 feet per minute? A. There is nothing in the patent which enables me to come to any conclusion on the subject. There is nothing said about exact speeds—no definite figures given and no definite stock referred to. He evidently calculated upon securing a higher speed than that which had been theretofore employed "for a certain grade of stock"—than what he regarded as the normal or average speed employed with that grade of stock. But there is nothing in his patent which defines the grade of stock he is talking about, and, so far as the patent itself is concerned, he might have been talking about speeds less than 400 feet per minute and might never have had the making of news in mind at all. The patent is absolutely silent in these regards.

There is, on the other hand, nothing in the patent which precludes the application of the alleged improvement to the manufacture of news; and assuming that the speed of 400 feet per minute was the normal speed at that time, I should say that he evidently contemplated higher speeds than 400 feet. From the data given in these diagrams, I take it, however, that 400 feet was far from being the normal, or at least the maximum, speed which was employed at that date in the manufacture of news. Apparently speeds of at least 500 were not at all unknown.

XQ181. Does the machine illustrated in the drawings of the Eibel patent embody the Eibel invention, as you understand it, in the assumption that it is designed to provide increased speed of paper? A. If applied to machines running slow enough and under low enough head, it might perhaps be. If considered as applied to the manufacture of news or any paper at speeds of 400 and upward, my answer is no, the pitch here shown is not sufficient to give to the action of gravity due to the pitch of the wire enough predominating influence in the acceleration of the stock to the speed of the wire.

XQ182. I believe you say that, as you understand the Eibel patent, it contemplates eliminating drag of the wire altogether as a factor in accelerating the stock to the speed of the wire; is that correct?

A. Yes.

XQ183. That is to say, your understanding of Eibel's scheme is that stock shall have been brought to equality of speed with the wire without friction of the wire or drag of the wire affecting it at all? A. Yes, that is Eibel's idea—that the pitch shall be great enough so that the action of gravity due to the pitch

will perform the work of accelerating the stock to the speed of the wire.

XQ184. Is that a practicable idea? A. If by this you mean to ask me whether it is practicable in high speed machines for making news to eliminate the drag of the wire entirely, I should say that it is not, judging from my analysis of the actual situation in the installations that have been brought to my attention. In every one of these installations the drag of the wire still remains a considerable factor in the acceleration of the stock. On the other hand, if you mean to inquire whether it is practicable to desire elimination of the drag of the wire so as to lessen the agitation of the stock due to the difference in speed between the wire and the stock, I should say that this is a practical desideratum. It seems apparent that the nearer the stock can be brought to the speed of the wire before the fluidity of the stock has been reduced to a point where the drag or friction of the wire amounts to any considerable factor, the less will be the agitation and rippling of the stock—the smoother will be its flow and the more evenly the fibres will settle down upon the wire.

XQ185. Will not the friction or drag of the wire traveling faster than the stock inevitably, to some extent at least, accelerate the stock, no matter how great the pitch of the wire? A. Theoretically, I suppose it would have some effect in that direction.

XQ186. And no man in his right mind could have expected to eliminate it entirely as a factor, could he? A. Why, yes, judging from this Eibel specification, I should think Mr. Eibel's comprehension of the problem involved was so limited that he might easily have failed to understand that he could not eliminate the drag of the wire, entirely, and still be in his right mind. That is exactly what he proposes to do by assuming to substitute the action of gravity for the drag of the wire. He evidently completely failed to comprehend the controlling influence of head in this matter of acceleration of stock, or the fact that with any such amount of elevation as is here pictured, or as I understand that he employed in the installation which you referred to yesterday as having been modified by him to operate with a pitched wire, in alleged conformity with his specification, the action of gravity due to the pitch of the wire would not only fail to overcome the drag of the wire but would not even amount to a predominate factor in the acceleration of the stock.

It is perfectly apparent to me from reading this Eibel specification in connection with my analysis of the actual conditions

existing on paper-making machines having the making-wire pitched from breast roll to guide roll, that Mr. Eibel had but the vaguest notion of factors which really enter into the acceleration of the stock and the influence of pitch upon these factors.

XQ187. If drag or friction of the wire had no appreciable effect in accelerating the stock up to the point of speed equality with the wire, isn't it inevitable that the stock should overrun the wire speed immediately after passing that point of speed equality?

A. No, I think not.

XQ188. Why not? A. Because the theory is that the stock rapidly loses its mobility and that the point of equality between speed of stock and speed of wire is reached just at the point the stock has lost its mobility to such an extent as will prevent the action of gravity thereafter from moving the stock faster than the wire, which I suppose is what you refer to by overrunning. Of course, the tendency is for the action of gravity to continue to accelerate stock clear to the guide roll. And the reason why it does not do so is simply that the stock after a time stays down on the wire, its water draining off—to such an extent as to prevent it from moving with respect to the wire. The theory is, as I understand it, that the stock is brought up to the speed of the wire just at the point that the mobility of the stock with reference to the wire ceases.

XQ189. Is there a sharply defined point where the mobility of the stock ceases? A. I should say that there was a definite point where the mobility of the stock had ceased to such an extent as to prevent it from being moved with reference to the wire by the slight influence of gravity due to the pitch of the wire; but I do not know of any way of exactly determining this point, which might vary more or less in different circumstances.

XQ190. On your theory of the mode of operation contemplated by Eibel, what speed ought a machine having the pitch shown in Eibel's drawing to run in order to embody the invention? A. I, of course, do not admit that Eibel made any invention or presented any invention which could be embodied in any machine. As I view it, the utmost that can be said for whatever change he contemplated as compared with the structures in practice of the art as it existed at that time is that this change was a mere matter of degree—simply a carrying forward of what had been done before without any new mode of operation or result, and without any difference in the mechanical construction involved.

Aside from this, however, I would state that, assuming that

the angular arrangement of wire actually illustrated in the drawing of the Eibel patent would apply to a 70-foot wire, as illustrated in my Diagram No. 1A, it would give to the breast roll an elevation above the guide roll of approximately 12 inches, making a net pitch of 4 inches to the point one-third down the wire from the breast roll to the guide roll. Under these circumstances, it would be impossible to run the machine at any speed which would make the action of gravity due to pitch of the wire the predominant factor in the acceleration of the stock to the speed of the wire unless heads lower than the minimum of two or 2½ inches necessary to produce an initial velocity of 200 feet per minute were employed. Assuming, for example, that it would be possible to operate such a machine with an effective head of one inch, giving a velocity of 138 feet per minute, then a speed of 325 feet per minute would enable the factor of the action of gravity due to pitch to exceed the factor of the action of gravity due to head in accelerating the stock to the speed of the wire, and the drag of the wire would be eliminated. This would probably be as near to an embodiment of the so-called new principle of operation shown in the Eibel patent as it would be possible to bring about with the angular pitch shown; but again I am obliged to point out that, as to the practicability of running such a machine at the rate of 325 feet per minute with such an abnormally low head as I have suggested —an effective head of only one inch—I am unable to offer any opinion.

XQ191. Why did you in drawing your diagram assume the wire speed of 585 feet? A. Because the whole discussion here centres about the comparison of defendant's machines with the Eibel patent in suit, and defendant's machines are operated at a wire speed of 585 feet per minute. It is for this same reason that I assumed the 70-foot wire which is illustrated in Diagram No. 1, and the 70-foot wire also in making the illustration shown in Diagram No. 1. In both these diagrams I was attempting to graphically illustrate what the disclosure of the Eibel patent really amounts to when as nearly as possible applied to the practical conditions under which defendant's machines are operated.

XQ192. Do you find the subject matter of Claims 7 and 8 of the patent to be embodied in defendant's machines? A. Yes. These claims simply refer to the mechanical construction of the machine by which the suction boxes are arranged on the same slope as the wire, regardless of the amount of pitch or speed or of the factors involved in bringing the stock up to the speed of the wire. Defendant's machines are similar in this

respect.

XQ193. Did you observe in the defendant's machines a breast roll adjusting mechanism? A. My recollection is the defendant's machines had a breast roll carried by brackets with slotted holes allowing for an adjustment of an inch or so.

XQ194. In either direction?

A. In either direction.

XQ195. Did you measure those adjustments? A. No. I am not absolutely certain about this, but that is my recollection.

XQ196. As a practical matter, can you say how much variation may be allowed between the theoretical speed to which stock will be accelerated by the influence of the head and the pitch, either one or both combined, and the speed of the wire at the point where felting takes place and yet good paper be made? A. No.

XQ197. Some variation permissible, is there not, between these two figures; that is, drag may properly be relied upon to make up some variation in speed? A. Certainly, my calculations indicate that drag is relied upon to a very material extent in almost every one of the installations which I have figured.

XQ198. I understand you to be of opinion that where the elevation of the breast roll is five inches or less, it is immaterial whether or not the suction boxes be level or be raised to an inclination corresponding to the inclination of the wire? A. So far as the operation of the machine after it is started is concerned, I would judge from the Pejepscot machine that this was true. That is to say, the machine was working perfectly when I was there under these conditions. I can conceive that the starting of the machine might involve more trouble under such circumstances, for it is evidently the pull of the vacuum in the suction boxes that keeps the wire down on the suction boxes, and this pull will not be fully developed at the time the machine is started. That is to say, not until the stock and water have weighed the wire down upon the suction boxes and enabled the latter to take hold.

I should think it would be better to have the suction boxes raised simply as a matter of greater ease in starting; but I cannot conceive of its being a serious matter either one way or the other.

XQ199. Does it make any difference whether the suction boxes are elevated or not if you have a breast roll elevation of three inches or less? A. It makes no difference, so far as I could see, what the elevation is up to at least five inches, so far as the making of paper is concerned after it is once started.

Those are rather practical paper making questions as to which my experience does not enable me to go further than to simply tell you what I saw. Of course, if it does not make any difference with a five inch pitch, it would not with a less pitch.

XQ200. You have assumed a distance from the top of the breast roll to the top of the guide roll of 29 feet in several of these machines and of different other distances in other machines. Upon what have you based those distances? A. In the case of defendant's machines, I measured these distances; also in the case of the Bayless machine, and I think in the case of each of the machines illustrated in my diagrams which I saw. Some of the machines I have never seen. I simply checked the data given me by defendant's counsel in these respects.

XQ201. Was the position of the slice in defendant's machines directly over the breast roll? A. Yes.

XQ202. Had you ever seen defendant's machines prior to the time when you saw them in November? A. No, I saw them but once.

XQ203. What did you think of the paper that was being made on the No. 2 machine in the defendant's plant? A. So far as I could see, it was substantially like the paper which was being made on the other machines.

XQ204. You found the point of speed equality between the stock and wire to be somewhat farther down the wire on that machine than the others? A. A little farther; about a foot farther.

XQ205. So that in that machine the point of speed equality was more than one-third of the distance from the breast roll to guide roll? A. Might have been a few inches more; not enough to take into consideration.

XQ206. Did you measure the head on that machine, or only on Nos. 1, 3 and 4? A. I measured the head on all the machines; substantially the same on all the machines.

XQ207. Did you measure the adjusting screw on the Kimberly-Clark machine at Kimberly? A. Yes, my recollection is that the adjusting screw stuck up 8 inches above the base in which the worm-wheel carrying the adjusting screw was mounted. But how far the screw ran down into the base or what its exact capacity for adjustment was I am unable to say.

XQ208. You have no memorandum on it? A. No, I was unable to determine that. It could not be exactly ascertained without taking the machinery apart.

XQ209. Was there blocking under the breast roll end of that machine when you saw it? A. I am unable to state.

XQ210. Did you say you saw the machine of the Kimberly-

Clark Company at Niagara, Wisconsin? A. No, I never saw that.

XQ211. How was the pitch obtained on the breast roll end of the Pejepscot machine? A. The machine was blocked up.

XQ212. Did you determine just the paper speed of that machine? A. No, I did not determine the paper speed in any instance. The only speed I took was the wire speed, by taking the number of rotations of the couch roll and the diameter.

XQ213. Did you determine the wire speed? A. Yes, I determined the wire speed and figured it at 490.

XQ214. Do you see any advantages in an arrangement of the machine such as that used in the defendant's machines over an arrangement like that in the Champion machine, illustrated in your Diagram No. 15? A. No, so far as I could see, the Champion machine with a flat wire was making paper just as successfully as the machines using the pitched wire and as fast as the machine was capable of running. That is to say, the limitation on speed here was the number of presses and driers, and, at that, the machine was running normally, so I was informed, at 540 feet per minute.

XQ215. Would it be possible for the defendant's machines to make paper as fast as they had if they did not use pitched wire? A. By judging from the Champion mill, I should think they would.

XQ216. And to make just as good paper? A. Yes, that is my view of the matter. It seems to me that the sooner you get the stock up to the speed of the wire the better you are off, and the way to do this is by using a high head on a flat wire.

XQ217. What speed was the Champion Company operating the day you were there? A. A paper speed of 490 and a wire speed of 469.

XQ218. And were they making good paper, A. It looked like good paper to me. The superintendent explained that the pulp was off that day and requiring them to run at a little slower than their usual speed in order to keep up the quality of paper.

XQ219. Do you think that if the Champion people had been operating with pitched wire that they then would have had to slow down on account of the quality of their pulp, A. I am unable to state as to what would have happened under the different particular conditions which were met with that day. I do not know what these conditions were. But that the stock in any paper mill is liable to be off so as to require a reduction of speed in the machines in order to make good paper is, I believe, notorious, and I know of no reason why a pitched

machine should be free from this sort of difficulty.

XQ220. How much head would the defendant have to carry on its machines to run at the speed at which it is running if it did not use a pitch? A. Judging from the practice of the Champion Paper Company, 13 inches, about.

XQ221. This would mean the drag was employed to some extent as a means for bringing the stock up to speed equality with the wire? A. Yes.

XQ222. How much allowance would you make for drag? A. In that case, 85 feet per minute, or about 16 per cent.

XQ223. Why would you make any allowance for drag? A. I do not know that that would be necessary; but it seems not to be objectionable in the practice of the Champion Paper Company to allow this percentage of drag, and I have assumed that the same conditions would obtain with regard to the slightly higher speed employed by defendant.

(Adjournment is taken subject to agreement of counsel, and it is understood, that if counsel for plaintiff after looking over the transcript on Monday desires to ask any further questions in cross examination of this witness he will notify counsel for defendant not later than 2 P. M. on Monday, January 7, 1918.)

607 Old South Building, Boston, Mass., Monday, January 7, 1918, 2 P. M.

Met pursuant to adjournment. Present as before.

CHARLES M. ALLEN,

a witness produced on behalf of the defendant, being first duly sworn, deposes and says, in answer to questions by Mr. Paul, as follows:

Q1. (By Mr. Paul.) What is your name? A. Charles M. Allen.

Q2. What is your age? A. Forty-six.

Q3. Where do you live? A. Worcester, Massachusetts.

Q4. What is your profession or occupation? A. I have a position as Professor of Hydraulic Engineering at the Worcester Polytechnic Institute, and do outside engineering.

Q5. As a consulting engineer? A. As consulting and testing engineer.

Q6. And particularly in the line of hydraulics? A. Yes.

Q7. How long have you been, Professor, at the Worcester Polytechnic? A. I am not absolutely sure but I should say since 1902.

Q8. Where did you receive your technical training? A. At Worcester Polytechnic Institute.

Q9. When did you graduate? A. '94.

Q10. 1894? A. 1894, yes.

Q11. What, Professor, is the rule for determining the velocity of the flow of liquids through orifices? A. The velocity is determined from a well-known formula,—v is equal to the square root of $2gh$, v meaning velocity, g the acceleration due to gravity, and h the head on the orifice.

Q12. How generally does this apply to orifices, that is, to the flow of liquids through orifices? Is there any limit as to the kind or location of such orifices? A. Well, that is what we call the theoretical formula. It does not include coefficients of any kind.

Q13. Is there any limitation as to the height or size of such orifices as compared to the amount of head? A. I don't quite understand that question, Mr. Paul.

Q14. The orifices that you are referring to are those which would be found in the side or bottom of a reservoir or vessel? A. Yes.

Q15. Well, now, assuming that this is an orifice in the side of the vessel, is there any limitation in applying this rule as to the height of the orifice as compared with the depth of the vessel or the depth of liquid in the vessel? A. In using this formula for orifice work, the head is measured from the surface of the liquid to the center of the orifice, provided that head is at least from two to three times the depth or height of the orifice.

Q16. Is this law generally applied to all fluids? A. The fundamental law applies to all fluids.

Q17. So far as the question of velocity is concerned, must any deduction be made on account of friction of the liquid or fluid with the walls of the orifice, and, if so, how much? A. In actual experiment there is always a coefficient for each orifice. The velocity is determined by the size of the opening and the surrounding conditions. I will put it this way. The discharge is affected by the orifice and whatever is around it, and that also affects the velocity to a certain extent.

Q18. Do you generally make very much of a reduction on account of friction with the wall of the orifice? A. What we call a standard orifice, which is merely a hole in the side of a vessel with sharp, square corners, in which the liquid merely touches those square corners and then proceeds into free air, the velocity through that top or orifice at the contracted section of the jet is approximately 98 per cent of the theoretical.

Q19. So that very little reduction is made? A. There is very little loss in velocity at this point of the contracted section.

Q20. Assuming that you had a box or vessel, or, as you

might term it, a reservoir or flow-box, with a narrow opening in the side at or near the bottom thereof, and that outside of the box was an inclined plane, with side walls, forming an open trough, so that as the liquid escaped through the orifice in the reservoir or flow-box it passed on to this inclined trough and flowed down that, what would be the law or rule for determining the velocity of the liquid at any point down the length of that trough, disregarding friction? A. If you disregard friction, the velocity at any point on that inclined trough would be due to the total head at that point.

Q21. And what do you mean by the "total head at that point"? A. The difference in elevation between the surface of the liquid and this particular point in question.

Q22. Between the surface of the liquid in the flow-box or vessel? A. Yes.

Q23. And the point on the incline? A. Yes.

Q24. Are you familiar with the engineering handbook that is generally called Trautwine? A. Yes.

Q25. Is that a standard engineering handbook? A. That is a standard reference book.

Q26. And are the formulas and tables in that book regarded as authoritative by the engineering profession generally? A. So far as I know.

Q27. I show you a reproduction of a printed page, which you may assume to be, if you do not recognize it, a photostatic reproduction of the page of Trautwine relating to the subject of hydraulics, and ask you to state if you understand the arrangement and mode of operation of the structure that is illustrated in the diagram or picture which is marked "Fig. 1" (handing photograph to witness)? A. I think so.

Q28. As I understand it, these lines extending out from the right of the reservoir shown in this figure are intended to refer to closed pipes, are they not? A. Yes.

Q29. Will you consider this figure and consider that the inclined lines that are marked "*r*" and "*o*" instead of representing a closed pipe represent an open trough. Would that figure then illustrate what you understood to be the structure that I proposed in the former question? A. Yes, I see no reason why it would not be.

Q30. Would you then have a reservoir or flow box with an opening at the point marked "*r*" and an inclined plane extending from there to the point marked "*o*"? A. Yes, sir.

Q31. Now assuming that to represent in that way a reservoir or flow box and an inclined open trough from "*r*" to "*o*," how would you determine the velocity of liquid passing out

from the flow box into the upper end of this trough? A. The velocity would be that due to the head from *"mi"* to the center of the orifice *"r."*

Q32. And how would you figure that? A. Using the formula v equals the square root of $2gh$, h being the distance from *mi* to the center of *r*.

Q33. Now, assuming as before, that this is an open trough extending from the point *r* to the point *o*, how would you determine the velocity of the liquid flowing down this trough at any point? A. I should determine it in the same manner—taking the velocity at any point equal to the square root of $2gh$, where h was the distance from the original level down to that point.

Q34. You mean by "original level" the level *mi*? A. Yes, sir; of course, disregarding friction losses.

Q35. And if you were to figure the velocity at the point marked *"o"*—you have the letters there—what would be the formula? A. V is equal to the square root of $2gh$, where h is the distance from *p* to *o*.

Q36. You could not properly figure that velocity by taking the formula as stated for the liquid passing that point, *r*, figuring h to be the distance *ir*, and then adding to that the velocity figured by taking the vertical distance from *o* to *r*, using the second formula? A. No, you could not combine in that way.

Q37. Now to get it so I will understand it clearly upon the record, Professor, will you state once more how you would determine the velocity of liquid entering the trough at the point *r*, and then will you state how you would get the acceleration or additional velocity that that liquid would acquire in passing down the inclined trough from *r* to *o*? A. I should first determine the velocity of the water issuing at *r* by the formula v is equal to the square root of $2gh$, where h is equal to the distance *mi* to *r*. I would then determine the velocity at the point *o*, using the same formula, where h in this case would be equal to the distance from *p* to *o*. I should subtract the velocity that I found at *r* from the velocity I found at *o*, and the difference would be the velocity due to the incline.

Q38. That would be the acceleration by the flow from *r* to *o*? A. Yes.

Q39. You would use that same formula for any other point on that incline? A. Yes.

Q40. And now considering that same figure and conceiving that the head above the opening *r* has been lowered so that the top of the liquid in the reservoir is a little below the top of the opening or orifice at *r*, how would you then figure the ve-

locity of the liquid flowing out through the orifice *r*, assuming, of course, that some means were provided for maintaining the same level of the liquid in the reservoir, that is, at a point just below the top of the orifice *r*. A. Where the head is so low the liquid does not touch the upper part of the orifice, the best way to figure the velocity would be to know the quantity that was being used. Knowing the depth of water above the bottom of the orifice and the length of the opening, you could then determine the mean velocity by using the formula q is equal to av. You know the quantity, you know the area; therefore, you can find the velocity. V is equal to q divided by a. The velocity of approach, as it is called, or the velocity with which the water comes towards that opening, would have considerable to do with the actual velocity.

Q41. Well, assuming that that was a low velocity of approach, could you give any approximate rule for estimating the velocity of flow through the orifice? A. The discharge under those conditions would be very similar to the flow over a wire. As I recall it, the formula for quantity varies as the three halves power of the head. I can only give an approximation.

Q42. Well, do that. A. Because conditions are not defined sufficiently.

Q43. You can assume conditions; just give us an illustration. A. The head on the top layer of water as it comes through this notch would be practically zero, while the head on the bottom would be the total head flowing over the crest, as we call it. That would mean probably that the mean velocity would be somewhere in the vicinity, I should say, of a third up from the bottom. That is merely an approximation, however. That could only be determined actually by experiment.

Q44. Then, would you say that approximately the velocity would be determined by applying this same formula in considering the head to be two-thirds of the depth of the stream at that point? A. I think that would be fair if you assume there is a quiet reservoir of water behind this particular opening. The velocity of approach has considerable influence. Cutting out velocity of approach and other losses, why, it would be a perfectly safe assumption.

Q45. Assuming that the amounts that flowed out were practically being supplied in a quiet way to the reservoir, that would be a fair approximation, do you think? A. I should think so, yes, sir. The first method I stated would be my way of determining velocity, to get the quantity and solve for velocity; then you have the mean velocity, absolutely.

Q46. But if you did not have the quantity and wanted to approximate the velocity, you could do it in the way you stated? A. I could do it, yes, sir.

Q47. That would be assuming the average head to be about two-thirds of the depth of the stream at that point? A. That is an approximation.

Q48. Is it a fact that engineering handbooks have worked out tables of these theoretical velocities due to given heads? A. Most of them have.

Q49. And are those generally used by engineers? A. They are.

Q50. You accept those for purposes of computations instead of working out the formulas? A. Yes.

Q51. And they are considered reliable for that purpose? A. They are.

Q52. Are you familiar with the table which I show you which appears in Trautwine's handbook (handing paper to witness)? A. I am, yes, sir.

Q53. And is that one of the tables that is generally used? A. It certainly is.

Q54. And that is considered reliable? A. It certainly is, yes, sir. I have only checked it at one or two points, but I assume the arithmetic is all right.

Q55. Where you have checked it you recognize it as correct? A. Yes, sir.

Q56. I find on this page containing the table that I showed you the formula stated as follows:

> "Art. 7. Flow through orifices. Theoretically the velocity, v, of a fluid, flowing through a small orifice in the side or bottom of a very large vessel, is equal to that acquired by a body falling freely in vacuo through a height equal to the head, h, or depth, measured vertically from the level surface of the fluid in the vessel, to the center of gravity of the orifice; or,
>
> $$v = \sqrt{2gh} = \sqrt{64.4h} = 8.03\ \sqrt{h}$$
>
> and $h = \dfrac{v^2}{2g} = \dfrac{v^2}{64.4} = 0.0155v^2$."

You recognize that as the standard formula for such computations? A. I do.

Q57. And it is also stated on this page:

> "This law applies equally to all fluids. Thus, theoretically, mercury, water, air, etc., all flow with equal velocities from a given orifice under a given head."

That is generaly true, is it? A. Yes, sir.

(Counsel for defendant offers said two photostatic copies of pages from Trautwine as exhibits and they are marked respectively "Defendant's Exhibit V-19," and "Defendant's Exhibit V-20.")

(Direct examination closed.)

CROSS EXAMINATION.

By Mr. Lyman:

XQ58. Are you at all familiar with paper-making machines? A. I have spent a good many days in paper mills, but I am not very familiar with the operation of paper machines, no, sir; just as I have been casually over the mills.

XQ59. Do you know what is meant by the flow-box and the slice? A. Yes, I think I know them.

XQ60. Suppose you have a slice opening of 1½ inches, and a total head of, say, 3 inches in the flow-box back of the slice; what would be the velocity of approach of the stock? A. Before answering that I would have to know the dimensions of the box back of the orifice opening. What we mean by velocity of approach is the mean velocity of the water as it comes up to the opening of discharge, and in order to get that mean velocity we must know the area of cross-section, the depth of water in the box and the width.

XQ61. You mean you must know the area of the opening into the flow-box? A. If that opening is close to the discharge opening, you would want to know that, because that also has an influence; but if you had a large box and an opening in one side, in order to get the velocity of approach you must know the area of cross-section of the water immediately back of the opening.

XQ62. Well, suppose the flow-box is flat and has a width substantially the same as the length of the slice opening and extends backwardly from the slice opening a couple of feet. The head in that flow-box is 3 inches. Does that give you the necessary data? A. The opening is one inch and a half in height?

XQ63. Yes. A. Now the head on that opening, you say, is 3 inches?

XQ64. Yes; the head back of the opening. A. Is that 3 inches above the center of the opening or bottom?

XQ65. Three inches above the bottom. A. Then there are 3 inches depth of water in the box?

XQ66. Yes. A. And the opening is 1½ inches?

XQ67. Yes. A. Then the velocity of approach would be one-half the velocity of the discharge, in that case.

XQ68. What, then, would be the velocity of discharge in

that case? A. An approximation I can give. The head would be three-quarters plus 1½, or 2¼ inches. Can I look at these tables? (Referring to Exhibit T8.)

XQ69. Certainly. A. How do you wish it expressed—in feet per second or feet per minute?

XQ70. Feet per minute. A. Something over 200 feet per minute would be the theoretical velocity of that jet.

XQ71. What would be the velocity due to the head alone? A. I am disregarding the velocity of approach now; I am just taking the velocity due to the head.

XQ72. Yes. Well, now, the velocity of approach would add to that? A. Would add to that somewhat.

XQ73. How much would it add to it? A. I don't know that I can answer that question exactly.

XQ74. It would be something more than one-half of 200 feet? A. Oh, no, no.

XQ75. I thought you said— A. Do I understand you to say the velocity of approach would be more than one-half?

XQ76. I understood you to say that the velocity of approach would be substantially one-half the final spouting velocity at the slice opening, and I understood you to say that if you had no velocity of approach and disregarded it, the spouting velocity at the orifice would be something over 200 feet? A. Yes.

XQ77. What I now ask is whether that means that the net spouting velocity would be 200 feet plus one-half of 200 feet, or more. A. Let me just start this once more.

XQ78. Go ahead and explain it. A. You understand when I say the theoretical velocity due to this 3-inch head is an approximation, you see the orifice is one-half of the total head. Now, in order to use this formula, which is considered perfectly safe provided the head on the orifice is from 2 to 3 times —this is a little under so there would be a certain amount there that you would have to look out for. It is perfectly true that if the velocity through that orifice was a certain amount due to any cause and the area of cross-section of the stream immediately back of that orifice were only twice the area of the orifice—you understand, disregarding coefficients—the velocity of approach would, of necessity, be one-half of the velocity of exit. Now, that velocity of approach has been given to it by head somewhere; so that the velocity of approach increases the discharge of an orifice and therefore increases the velocity.

XQ79. Yes. Now, my question is, what would be the actual velocity of discharge from that opening and assuming those conditions? A. Do I understand you to mean by "actual" at the same time cutting out the actual coefficients that we always

have to look out for—you mean theoretically?

XQ80. Theoretically, yes. A. Theoretically, then, the discharge from that orifice would be that due to the head on it, which we have computed in the vicinity of 200 feet per minute, plus the velocity due to approach.

XQ81. What would be the velocity due to approach? A. The velocity due to approach, if the exit velocity from that entire orifice were 200 feet per minute—the velocity due to approach would be 100 feet per minute. I don't mean to say you can add 100 feet per minute directly to the 200 and get the final discharge velocity; but I do say the velocity of approach has a direct bearing on the velocity of that orifice.

XQ82. Can you figure out approximately what the velocity would be at that orifice under those conditions? A. That would be too much of a problem for me to figure out, to get the actual velocity, because of the coefficients that come in.

XQ83. You mean the coefficient of friction? A. The coefficient of friction and coefficient of contraction, you know.

XQ84. You mean the contraction of the stream at the opening? A. There is a contraction as it goes around one side of that orifice and the other side is free from contraction, you see. I don't believe I could figure it.

XQ85. I want to get as near an approximation as I can to it. Now, in the first place, let us leave out the coefficients and see what you would come to theoretically. A. The velocity of approach would be approximately 100 feet per minute. Reducing that velocity of approach to feet head by these same tables, 100 feet per minute is 1.66 feet per second. The head which produced that velocity, therefore, is approximately .04 of a foot, as taken from the tables. The velocity due to head at the orifice is 200 feet per minute, we assumed. That is 3.33 feet per second. The head which produced that is .17 of a foot. Now, adding those two heads together we get .21 feet, which is the total head which is producing that velocity at this point of exit. Looking at our tables, we find the head of .21 feet will give 3.68 feet per second, which means 220.8 feet per minute. Is that what you wanted?

XQ86. That is what you figure would be the actual spouting velocity? A. Yes, cutting out the coefficients, you know. I have to keep saying that.

XQ87. Then you do not have 100 feet velocity of approach? A. Not directly, no. Velocity and head are interchangeable.

XQ88. Why don't you add it directly? A. The formula states that the velocity is equal to the square root of $2gh$. In other words, the velocity varies as the square root of the head.

If they were directly proportional, you could. But where one quantity varies as the square root, you have got to reduce back to a common denominator, I should call it, or pretty near that. The real reason is, I suppose, that the square root of a number isn't made up of the square roots of the sum which goes to make up that number.

XQ89. When you have been through that calculation you find that your assumption of a velocity of approach at 100 feet is an error? A. What do you mean?

XQ90. Because the final velocity you find to be 220 feet, and the velocity of approach must, therefore, be the 110 feet, whereas you have assumed it is 100 feet? A. I don't quite understand that, Mr. Lyman.

Mr. Lyman (To the stenographer): Read that question.

(The question is read.)

A. The assumption that the velocity of approach was 100 feet was directly from the quantity issuing at the orifice.

XQ91. Yes, I understand. But that assumption isn't a correct one? A. No.

XQ92. So that your figures are not correct. Doesn't it require some use of the calculus to determine that? A. Well, I don't doubt the calculus could be used.

XQ93. Isn't it necessary? A. I should prefer to experiment.

XQ94. In other words, do you mean that you can't tell what that velocity is until you have made experiments—what the actual velocity on that head is? A. Only approximately.

XQ95. Your process of reasoning won't give it approximately, will it? A. You see, you have cut out all coefficients and losses.

XQ96. Yes. A. Sometimes coefficients are the biggest part of the formula.

XQ97. Yes; but we are assuming, for the moment, that coefficients are not to be considered. A. Well, then, this is all right.

XQ98. But it seems to me that you are involved in a contradiction. In the first place, you assume that the velocity of approach is one-half of the spouting velocity at the orifice, and then on that basis you take 100 as the velocity of approach, because you assume a spouting velocity of 200. Then, by your reasoning, you show the spouting velocity isn't 200, but something more. Then the velocity of approach must be greater than 100. A. If the area of exit is equal to one-half the area of the box, if the velocity at this point is 200—

XQ99. The velocity at the exit? A. At the exit, yes—is

200, and this area is twice as big in cross-section, the mean velocity there must of necessity be one-half—figuring it on that basis.

XQ100. Yes. A. Now, if we assume that we have a velocity of approach there of 100 feet per minute, in order to solve this problem we have got to reduce that velocity to feet head in order to get correct values, and that is what I have done there.

XQ101. Yes. I ask you whether you can properly assume that the velocity of approach is 100 feet only, upon the facts as stated to you, for the reason that, until you know what the actual spouting velocity is, you don't know what one-half of it is? A. That is perfectly true.

XQ102. So that you can't calculate what that velocity is—A. Not actually.

XQ103. —on the method of figuring that you have adopted. A. Not actually.

XQ104. And you can't calculate it even disregarding the coefficients of friction and contraction, etc.? A. You can't get the actual value without including the coefficient of friction.

XQ105. No. You can't get the theoretical value there, with coefficients eliminated, by your process of figuring, can you? A. I don't see why not.

XQ106. Because you have assumed a velocity of approach of one-half of 200 feet, one-half of the spouting velocity, which you assume to start off with to be 200 feet, but in fact your own conclusion shows you the velocity is more? A. I get your point now, Mr. Lyman. When we got all through we found the spouting velocity to be 220.

XQ107. Yes. A. And then we should go back. This is purely a question of cut and try, and this velocity approach—we should go back and correct that velocity approach.

XQ108. That would be 110? A. That would be 110.

XQ109. That would throw all your calculations off? A. The velocity of approach has a direct bearing on the discharge, and you don't know—you have got to follow the same rule that you have when you get the discharge over a weir. If the velocity of approach does not amount enough to be measured, we forget it. If it does, we have to use the formula, and if we find the velocity of approach amounts to any considerable amount we have to go back and do it all over again until we cut the error down so it is not worth hunting for. That is the usual practice. That is, one is dependent on the other. I did not get your point in the beginning.

XQ110. Can you calculate what would be the velocity of exit in a case where you have a head of 6 inches back of the slice

in the flow box and a slice opening of 1½ inches? A. I think I can, yes, sir.

XQ111. Let us hear that. A. I understand the head to be 6 inches to the bottom?

XQ112. Yes. A. This computation will probably be closer than the first because the head, you see, is greater in proportion to the height of the orifice; so it is perfectly proper there to take the head on the center of the orifice. You say the orifice is 1½ inches?

XQ113. Assume 1½ inches. A. And the head would be 5¼ inches on the center and the velocity due to 5¼ inches would be approximately 315 feet per minute. The velocity due to head of 5¼ inches on the center of the orifice would be approximately 315 feet per minute.

XQ114. Now, what about the velocity of approach? A. How much depth of water are you going to have?

XQ115. Assume 6 inches. A. Disregarding coefficients?

XQ116. Yes. A. You would have a velocity of approach of approximately one-quarter of 315, or 78.7 feet per minute velocity of approach.

XQ117. So what would your total velocity be—spouting velocity? A. Well, I will have to go through the same series of computations. Unless I have made a mistake, I get 326 feet a minute. To make that more accurate you would have to take the quantity as determined and this new velocity and go back and do it over again.

XQ118. It would add something to it? A. It would add a little something.

XQ119. How much? A. Not much.

XQ120. 10 or 15 feet? A. No. The velocity approach in this case has only made it from 315 to 326, you see—about 11 feet; so, the next would cut it way down.

XQ121. Now please assume a mean head of 2¼ inches, that is, a head above the center of the slice opening of 2¼ inches, and a slice opening of 2½ inches. What would be your total velocity? A. Simply due to that head without knowing anything about it?

XQ122. Due to the head plus the velocity of approach? A. You are taking the head above the opening being 2¼ inches?

XQ123. Above the center of the opening. A. Oh, above the center of the opening?

XQ124. Yes. A. That is getting so near—it has gone beyond what you might call the danger zone. You can't any more than approximate the velocity, when the head is as low as that relative to the given size orifice. You are getting nearer and

nearer to a weir, and I can't figure that offhand. It is a cross between a weir and an orifice right in there; it is the twilight zone.

XQ125. Get it as closely as you can. A. I can approximate in the same general way, if you appreciate we can't get it absolutely. According to these figures, if you had a 2¼ inch head to the center of the opening, that gives a velocity approximately of 200 feet per minute; and if this opening were 2½ inches and the depth of water in the box just preceding the orifice was equal to 2½ plus 1, or 3½ inches, the velocity in that portion of the box, if it is 200 feet per minute here, would be 142—inversely proportional to the area of cross section, if my figures are right. I hate to do this longhand arithmetic under the circumstances, but that looks about right. Now, the head which has produced this 142 feet per minute is approximately 2.36 feet per second, and the head corresponding to that velocity, from the tables, is about .086 feet head which has produced this velocity. I add that head to the head which produced the 200 feet per second, and that corresponds to .172, and I get .258 feet head. That in turn produces a velocity of 4.07 feet per second, or 244 feet per minute instead of 200. In other words, the velocity of approach to an orifice of the size and under those conditions is the same as adding the equivalent head which I figured. Now, to make that correct, you would have to cut and try again, using that 244; it cuts down very rapidly.

XQ126. What acceleration will be caused to water running down an inclined plane having a grade of 13½ inches in 29 feet? A. I have got to ask a question before I can answer that. Does the water start from zero velocity—at rests on the top of that inclined plane?

XQ127. What acceleration— A. Cutting out friction? Acceleration is entirely due to gravity.

XQ128. Yes, eliminating friction. A. Acceleration is the value of g, which is 32.2. That is, that many feet per second are added to velocity—acceleration, 32.2.

XQ129. Feet per second? A. Yes, feet per second.

XQ130. I want to know how many feet per second would be added on a plane having that pitch? A. Going from one end to the other, you mean?

XQ131. No, in terms of acceleration. What would be the feet per second in time. A. I can't give you that offhand.

XQ132. Is it much of a calculation? A. Why, somewhat, if I understand your question correctly. I can answer it in this way. The velocity at any point on this inclined plane, if a body starts at rest—the velocity along the inclined plane, bar-

ring friction, is exactly the same as if it had dropped that vertical distance. That is what I shall have to start with.

XQ133. My question was what that inclination—what acceleration a body traveling over that inclined plane would receive per second? A. I can't give you that without computation.

XQ134. What is the formula? A. Why, the formula starts right back with what we have been using—v equals the square root of $2gh$, h being affected by the inclination of this particular plane, or the angle.

XQ135. Well, how does the angle of the plane affect h? A. The greater the angle the more inclination— You see, you start from a vertical and you can swing through all degrees up to the horizontal; but when you are in the vertical, h is a perpendicular height; when you change from that to go into horizontal, it changes from that particular—

XQ136. It depends on the sine of the angle? A. I should say so, yes, right off-hand. I would have to work that thing up. I could work it given my time in it, but it is a question of making up formulas. I don't carry that sort of thing in my head.

(Cross examination closed.)

RE-DIRECT EXAMINATION.

By Mr. Paul:

RDQ137. Professor, as I understand you, taking into account the velocity of approach adds slightly to the spouting velocity due to head alone, where the coefficients and the velocity of approach are both disregarded? A. Yes. I just want to get that question once more.

Mr. Paul (To the stenographer): Read the question.

(Question is read.)

A. Yes, that is so.

(Re-direct examination closed.)

Mr. Paul: You will waive signature?

Mr. Lyman: Yes.

---

607 Old South Building, Boston, Mass., Thursday, Jan. 10, 1918.

Met pursuant to adjournment. Present as before.

JOSEPH P. LIVERMORE,

a witness produced on behalf of the defendant, being first duly sworn, deposes and says in answer to questions by Mr. Paul, as follows:

Q1. (By Mr. Paul.) Please state your name, age, place of

residence, and occupation. A. Joseph P. Livermore I am 62 years old, reside in Cambridge, and am a mechanical expert by occupation, having my office in Boston.

Q2. Please state what training and experience you have had, tending to qualify you to testify as a mechanical expert. A. I received a technical education at the Lawrence Scientific School, of Harvard University, at which school I was graduated as a civil engineer, in 1877, having previously been graduated at Harvard College, in 1875. Beginning in 1879, I practiced for some years as solicitor of patents, but during the past thirty years or more, I have been occupied principally as a mechanical expert, in investigating machinery in processes employed in industrial arts, with a view of ascertaining and advising whether or not they embody matters of substantial novelty, and whether or not they embody matters forming the subject of existing patents, and as a preparation for testifying, as a mechanical expert in patent cases.

Q3. Are you familiar with the Eibel patent numbered 845,224, sued upon in this action? A. Yes.

Q4. Are you familiar with the following named patents relating to paper machines, to-wit, No. 684,081, issued to Moore and White, October 8, 1901; No. 634,222, issued to Barrett & Horne, October 3, 1899, and No. 691,333, issued to Barrett & Horne, January 14, 1902? A. Yes.

Q5. Are you familiar with the general principles governing the flow of liquids, and their acceleration under the action of gravity? A. Yes.

Q6. Are you familiar with any engineering treatises, stating and illustrating these principles and rules? A. I had occasion to study such treatises, as a part of my course in civil engineering, and have had occasion to study the subject more or less at various times, in the practice of my profession. Are you generally familiar with the rules and tables relating to hydraulics and the flow of liquids, stated in the civil engineer's pocketbook, by John C. Trautwine, which has been referred to in the examination of witnesses in this case as "Trautwine;" and particularly, are you familiar with the rules and tables shown in the reproductions of two pages of this book, which have been marked in evidence herein as "Defendant's Exhibits V-19 and V-20." A. I am not especially familiar with the Trautwine book, as I have been accustomed to use a similar book by Haswell.

I have, however, considered the parts represented in the reproduction, and understand what is represented by them. I, of course, have not computed myself the velocities given in the table, although I have made such computations, and I have no

doubt that the figures given are correct.

Q8. This handbook of Trautwine is considered a standard authority among engineers, is it not? A. I believe so; but, as I said, I have not used it myself, and haven't been especially familiar with it.

Q9. Please explain what you understand to be the arrangement and mode of operation set forth in the Eibel patent in suit, numbered 845,224. A. The Eibel patent relates to a Fourdrinier paper machine, and the specification states, at the outset, that the object of the invention is to construct and arrange the machine so that it may be run at a higher speed, and produce a more uniform sheet of paper than had been previously done.

There is no indication that any change has been made in the construction of the machine, from what was known as standard at that time; but what is set forth as characteristic, is an arrangement or an adjustment of the parts having relation to the velocity of the stock, relative to the velocity of the making-wire of the machine.

It is unnecessary for me to give any description of the general components of the machine, at this time, as they have already been described quite fully in the testimony in this case. It is enough to consider that the stock or water containing the fibre or pulp that is to make the paper, is flowed on to a traveling, woven wire screen or apron, through the meshes of which the water drains, leaving the fibre deposited on the wire in the form of a sheet, which is subsequently taken from the wire, as the operation of the making of the paper progresses.

The speed of travel of the wire is the speed at which the paper is made, or at any rate, controls that speed so that, generally speaking, the more rapid the travel of the wire, the greater the speed of the machine; and consequently, the larger production of paper in a given period of operation.

The stock is delivered on to the wire at one end of the working part, from a flow-box, which contains a considerable supply of the stock, and is constantly replenished while the operation is going on, so that it is kept at a substantially constant level from the flow-box, and flows out from the same under the slice, on to the wire. It is customary to have a provision by which the level in the flow-box may be varied, to give a greater or less head above the wire, so that the stock issues from the flow-box under the slice, with a certain initial velocity in the direction of travel of the wire, which is due to this head.

Nothing is said in the Eibel patent as to the head, the flow-box not being illustrated at all in the Eibel patent, which is di-

rected to the feature or principle of operation of imparting velocity to the stock by causing it to flow after entering upon the wire, in a downwardly inclined direction, which is effected by adjusting the position of the wire, so that the end at which the stock is received is substantially higher than the end at which the formed paper is removed from the wire.

The Eibel patent emphasizes the fact that in order to produce a uniform, well laid sheet, it is necessary that during a considerable part of the period in which the water is draining out of the stock and the fibre is accumulating on the wire, the velocity of the wire and of the stock should be equal. Without specifying any definite speed, the patent also indicates that the wire is to be run at a high speed, certainly higher than what had been the usual practice up to the time of the patent, and much higher than the speed at which the stock issues from the flow-box.

The patent also indicates that in the prior practice the wire travels, or may travel, much faster than the stock, the specification referring to the common prior practice, in the paragraph beginning line 80, page 1, in which the patentee says:

> "so far as I am aware, the making-wire has always had to perform the work of drawing along the stock, and as the wire moved much faster than the stock, the stock waved or rippled badly near the breast-roll end of the wire, which gradually diminished, until an equilibrium was established, and a smooth, even and glassy surface presented, and not until the waving or rippling ceased, did the fibres lay down uniformly, and produce a well-formed sheet of paper."

The essential feature of Eibel's arrangement, as I understand it, is directed to the elimination of this dragging effect of the wire on the stock, by causing the action of gravity on the stock to accelerate its speed, so as to bring it to the point of equality, or equilibrium, as the specification says, at a comparatively early period in the travel of the wire, while the stock is still fluid, so that from that point there would be no such disturbance or waving or rippling as is described, to affect the laying of the fibre detrimentally.

This acceleration of the stock by gravity, is effected by giving the wire a downward inclination or pitch from the flow-box, such that the acceleration due to gravity will bring the stock up to the speed of the wire at the proper distance from the flow-box, without involving any material accelerating effect due to the drag of the wire, which drag or friction between the wire and the stream of liquid is the objectionable thing which it is Eibel's purpose to eliminate.

In referring to the prior art, or prior practice, the specifica-

tion states that the wire has usually been arranged to move in a horizontal plane, although "means have been provided for adjusting the breast-roll end of the wire to different elevations, usually below the level, to provide for running with different grades of stock—as, for instance, with quick stock and slow stock."

Later on in the specification, referring to his own construction, the patentee says that the "elevation above the level at which the breast-roll end of the making-wire is maintained, will vary according to the grade of stock; but in any event it will be substantial, so as to cause the stock to move rapidly by gravity."

A little later the specification referring to Eibel's own construction, says:

> "For the purpose of increasing the speed of the machine to the maximum, I maintain the breast-roll end of the making-wire at a high elevation above the level, so that the stock travels by gravity much faster than the making-wire ordinarily runs, for a certain grade of stock, and I then increase the speed of the machine to such an extent as to bring the rate of speed of the making-wire up to the speed of the rapidly moving stock, and as a result, the capacity of the machine is largely increased."

This seems to me to be rather an inverted order of procedure, as it would appear more natural to give the wire the desired speed, and then bring the speed of the stream to equality with it by adjusting the level of the breast-roll, and consequent downward pitch of the wire; but in any event, it is clear that the essential characteristic of Eibel's plan is to give the wire such a downward pitch that the velocity acquired by the action of gravity on the liquid, shall equal the velocity at which the wire is traveling, and that this equilibrium shall be established at the desired point on the wire, and without the disturbing effect of the drag of the wire on the liquid, such as necessarily results when they are traveling at considerably different speeds. As I before stated, the Eibel patent is silent as to the speed at which the stock comes on to the wire from the flow-box, and I think it might be reasonable to assume that the pitch given to the wire is such as would cause the acceleration due to gravity to bring the stock up to the speed of the wire, starting from a standstill at the head of the wire, or should be sufficient, to bring it up to the speed of the wire, starting from the relatively slow speed of issue from the flow box, which is what the patent indicates was used in practice, by the statement that the wire moves much faster than the stock.

Q10. I call your attention to the matter beginning with line

67, page 2, of the Eibel patent in suit. What do you understand is meant by this statement? A. The statement, which refers to what occurs in the operation of the machine in the patent, is as follows:

> "Furthermore, as the stock carries less water when arriving at the suction-boxes, the amount of suction ordinarily required may be reduced, thereby reducing the friction due to the making-wire passing over the suction boxes, and hence, increasing the life of the wire."

I do not know as I understand just what is meant by this statement, because it does not indicate exactly what is the basis of comparison.

Presumably, the statement that the stock carries less water, would mean that it carries less water with the high elevation of the breast-roll and large pitch that has been described as characteristic of Eibel construction, as compared with a small pitch, such as the specification indicates had been used in previous practice.

If that is what is meant, the statement is obviously wrong, for, other things being equal, the stock would carry more water, or carry the water further down, the greater the downward pitch of the wire. That is, generally speaking, so far as the carrying of the water depends upon the pitch of the wire, the greater the pitch, the less the drainage; consequently, the more water arrives at a given point down the wire, say, at the suction boxes.

Q11. Mr. Aldrich, called as an expert on behalf of the plaintiff, and testifying in respect to the Eibel patent in suit, has said (XQ227), "I don't think it (that is the pitch required) is to be thought of in connection with the head, at all;" and also (XQ230), "In other words, the Eibel invention can be employed without any head at all."

What would be the velocity in the direction of travel of the wire, if the stock was introduced without employing any head at all, as Mr. Aldrich says may be done? A. The initial velocity in the direction of travel of the wire, would be nothing. So far as now occurs to me, however, it would not be practicable to introduce the stock from a flow box of ordinary construction, unless there was some head, at least to the extent that the surface of the stock in the flow box was above the surface of the wire to an amount equal to the thickness or depth of the stream from the flow box, before any material drainage had taken place. This would give some comparatively small velocity in the direction of the travel of the wire, possibly in the neighborhood of 100 feet a minute, more or less.

Q12. Mr. Aldrich, called as an expert witness in behalf of the plaintiff, in a suit by this same plaintiff against the Remington-Martin Company, has testified in part, as follows:

"(Cross-Int. 76) The Specification of the Eibel Patent in line 27, page 2, contains the following statement:

'The elevation above the level at which the breast-roll end of the making wire is maintained will vary according to the grade of stock.' This is a description, is it not, of the adjustment of the breast-roll for the same purpose for which you say the breast-roll adjustment of the various prior art patents are provided? Ans. I think it is probable.

Cross-Int. 77. Do you not think it is quite certain? Ans. I can only say that I think that that must be the case."

Please state whether you agree with the views expressed by Mr. Aldrich as to this portion of the specification of the Eibel patent? A. Yes, that is, I understand that the elevation of the breast-roll and the resulting pitch of the wire that was employed in ordinary practice, is varied, according to the grade of stock, which I understand is described as done in the Eibel machine, in the matter quoted from the specification.

Q13. Do you find, in the Eibel patent in suit, anything indicating how the point where equilibrium between the stock and wire is established, can be ascertained? A. Yes, in the matter which I have already quoted, between lines 90 and 95, page 1, it is stated that the stock waved or rippled badly where the difference between the wire speed and stock speed was great, but that the rippling gradually diminished, "until an equilibrium was established and a smooth, even and glassy surface presented." This would indicate that one could ascertain the point at which equilibrium between stock speed and wire speed was established, by observing the speed at which the ripples disappeared and the stream acquired a smooth, even, glassy surface.

Q14. Mr. Henry W. Carter, a witness examined in this cause on behalf of the defendant, has produced a diagram which he has designated "Diagram No. 1," and which he states illustrates the amount of pitch required on a 70-foot making-wire having the breast and guide rolls arranged at substantially 25 to 29 feet apart, to carry out the arrangement and mode of operation described in the Eibel patent in suit. Please examine this diagram and state whether you understand the same. (Witness examines said diagram.) A. Yes.

Q15. Mr. Carter states that, as illustrated in this diagram, he finds a total pitch of 54 inches would be required with a 70-foot making-wire running at a speed of 585 feet per minute,

with breast and guide rolls arranged substantially 29 feet apart, to produce the operation described in the Eibel patent in suit. State whether, assuming there is no head used, you agree with Mr. Carter that the diagram is a correct reproduction of the arrangement and mode of operation set forth in said Eibel patent in suit? A. I do.

Q16. Assuming the stock is brought upon the receiving end of the making-wire of the Eibel patent at an initial speed of 200 feet per minute, which I understand Mr. Aldrich indicates was the normal or usual initial speed prior to Eibel's patent, what pitch would then be required to bring about the result stated in said patent with a wire speed of 585 feet per minute?

Mr. Lyman: The question is objected to as misquoting the testimony of Mr. Aldrich.

(Counsel for defendant calls attention to the portion of the deposition of the witness Aldrich in answer to Q4 in the two paragraphs on typewritten pages 8 and 9 of said deposition.)

A. Very close to 48 inches; that is, the breast-roll end would have to be elevated 48 inches above the lower end.

It requires about 18-inch head to give the assumed speed of 585 feet per minute, and about a 2-inch head would give the assumed initial speed of 200 feet per minute, which would leave 16 inches head for the slope in order to bring the velocity of the liquid up to the 585 feet per minute assumed for the wire.

As the point of equilibrium is assumed at about one-third of the distance down the wire, this pitch or head of 16 inches would have to be acquired in a third of the length of the wire, and, consequently, the total pitch for the entire length of the wire would be three times sixteen inches, or the 48 inches which I gave at the outset.

Q17. Mr. Carter has produced another diagram, marked "Diagram No. 1A" and which is on the same sheet with Diagram No. 1, which he states reproduces on a larger scale the construction, proportions and adjustment of parts shown in the Eibel patent in suit. Assuming the making-wire to have in this instance an elevation of 12 inches at the breast-roll, as stated by plaintiff's expert, Mr. Aldrich, and the stock to go on the wire with no head, as Mr. Aldrich states it may do, what speed would be attained by the stock at a point one-third the distance between the breast-roll and guide-roll? A. If the making-wire has an elevation of 12 inches at the breast-roll, its elevation relative to a point one-third the distance between the breast-roll and guide-roll is 4 inches, which would be the effective head to impart the velocity to the stream by the time it had arrived at this point.

The velocity due to a head of 4 inches is very close to 275 feet per minute. I might say at this point that in this, as in other answers of the same character, I give what might be called the theoretical velocity, that is, the velocity due solely to the force of gravity and the inertia of the liquid In practice, where the flow is in a conduit and in the air, there will be some reduction of velocity due to various resistances; but the figures which I give may be regarded as the maximum velocity attainable due to the effect of gravity on the liquid or on any mass moving without obstruction down the incline designated.

Q18. Then what would be the maximum speed of the wire of the Eibel patent having the length and elevation represented in the Carter Diagram No. 1A, if operated in accordance with the theory of said patent? A. Theoretically, 275 feet per minute; practically, possibly a little more or less, if the instructions of the patent were followed which are given in the paragraph beginning line 39 on page 2.

That is, the elevation of the wire would give a theoretical velocity of 275 feet per minute, but practically it would probably be less than this, owing to the resistances; and then, following the instructions, the speed of the machine would be increased until the speed of the making-wire came up to that of the rapidly moving stock.

The speeding up of the wire would, however, increase the speed of the stock somewhat, as the friction between the wire and the stream would now tend to increase the speed, where before it tended to diminish it, and, consequently, the actual speed at which the wire and stock would come together at a point one-third the way down would probably be somewhat over 275 feet per minute, but I should judge not much.

Q19. How much would be this increase if the stock entered upon the wire with an initial velocity of 200 feet per minute? A. It would require about a 2 inch head to give the initial speed of 200 feet per minute, and the additional 4 inches on the pitch of the wire would make a total head 6 inches at the point one-third the way down the wire. This would give a theoretical velocity of 340 feet per minute, or would add 65 feet per minute to the velocity of 275 that was obtained by the slope alone.

Allowing for whatever corrections might be necessary, the relative difference would be probably very nearly the same, that is, the speed acquired when the water came on with an initial velocity of 200 feet per minute would be less than 30 per cent greater than if it came on with no initial velocity at all.

Q20. Starting, then, with the Eibel machine thus adjusted for a speed of 340 feet per minute, what would be done under

the instructions of the Eibel patent if one desired to run at a wire speed of 585 feet per minute? A. The pitch would be raised until it was sufficient to give the desired velocity of 585 feet per minute one-third the way down the wire.

A velocity of 585 feet per minute requires a head of about 18 inches, and as we have assumed the initial head of 2 inches, this would require a head due to pitch of 16 inches. As this pitch elevation of 16 inches is in one-third of the length of the wire, the total pitch elevation or head of the breast-roll above the lower end would be 48 inches.

Q21. There is evidence in this case by witnesses produced by the plaintiff tending to show that the defendant's machines complained of have the wire arranged with an elevation at the breast-roll of between 14 and 15 inches, the distance from breast-roll to guide-roll being 29 feet; that the speed of the wire is about 550 feet per minute; that the machines are operated with a head of from 6 to 8 inches; and that the point where the sheet smooths out by reason of the stock and wire coming to the same speed is between 9 and 10 feet from the slice. Witnesses for the defendant have testified that the elevation of the defendant's machines is 13½ inches, the head 6 inches, and the wire speed 585 feet per minute. Please state whether you consider that a machine of either of these descriptions, would employ the arrangement and mode of operation of the Eibel patent in suit, stating your reasons for your answer? A. I do not.

The distance of between 9 and 10 feet is about one-third of the distance specified from the breast-roll to the guide-roll. Consequently, the point where the sheet smooths out, which, according to the Eibel patent, would be assumed to be the point of equilibrium of speed between the wire and stock, is about one-third of the way down the wire and has a head equal to one-third of the total elevation of the breast-roll, specified as between 14 and 15 inches. I will, therefore, assume it to be 5 inches head due to the pitch of the wire. Taking the mean of 7 inches for the initial head at the flow box, this would give 12 inches as the total head above the assumed point of equilibrium. This would give a theoretical velocity of about 480 feet per minute, which would be 70 feet per minute less than the assumed speed of the wire.

Consequently, equilibrium between the wire speed and liquid speed could not be obtained even approximately by the action of gravity on the liquid, and if the speed equality is attained at this point, it must be due to a very substantial dragging action of the wire, sufficient to increase the speed from 480 to 550 feet, which dragging action is just what the Eibel plan proposes to

eliminate.

Furthermore, in the speed of 480 feet per minute due to the total effective head, about 365 feet would be due to the initial head from the sluice box, leaving only 115 feet per minute acquired from the acceleration from flowing down the incline.

This 115 feet per minute is rather an insignificant fraction of the total of 550, about 20 per cent; but, according to my understanding of the Eibel patent and of Mr. Aldrich's position in relation thereto, the plan of the Eibel patent is to give substantially the whole of the velocity to the liquid by the action of gravity on the sloping part of the wire.

Considering now the machine proportioned or adjusted as referred to in the second branch of the question, with a head of 6 inches and a total pitch elevation of 13½ inches, the pitch elevation down to the assumed point between 9 and 10 feet from the slice would be 4½ inches, giving a total head of 10½ inches.

This would give a velocity of about 450 feet per minute, or 135 feet per minute less than the speed of the wire.

Consequently, equilibrium between the current and wire would not be established by a very large margin unless it was done by the drag of the wire, which is, as I understand, just what the Eibel plan proposes to eliminate.

Furthermore, out of the maximum speed of 450 feet per minute derived from the force of gravity, 340 feet would be derived from the initial head, leaving only 110 feet per minute to be imparted by the force of gravity on the flow. This is less than 25 per cent of the total speed derived from gravity, and less than 20 per cent of the speed of the wire.

Instead, therefore, of the pitch of the wire imparting to the stock a speed substantially equal to the speed of the wire, which I understand is what the Eibel patent sets forth as the purpose of the construction forming the subject of that patent, in defendant's machines the slope of the wire imparts less than 20 per cent of the velocity required to equal that of the wire.

(Noon recess.)

Afternoon session.

Direct examination of Joseph P. Livermore, resumed.

By Mr. Paul:

Q22. There is also evidence in this case by witnesses produced by the defendant, tending to show that since the commencement of this suit one of defendant's machines, designated as No. 2, has been lowered, so that it now has an elevation at the breast-roll of 6 inches, the head remaining at 6 inches and the wire speed at 585 f. p. m. Please state whether you consider a machine of this description would employ the arrange-

ment and mode of operation of the Eibel patent in suit, giving also your reasons for your answer. A. I do not. In this case, the head due to pitch or slope down to the point of equilibrium, is one-third of 6, or 2 inches.

This, with the assumed initial head of 6 inches, makes a total head of 8 inches for accelerating the liquid.

In round numbers, this gives a velocity of 390 feet per minute, due to gravity, which is 195 feet per minute less than the assumed velocity of the wire. Consequently, if equilibrium is attained, as assumed, at a distance of 9 or 10 feet down the wire, it will be because the drag of the wire has imparted practically one-third of the total velocity of liquid, at that point.

The velocity of the liquid coming on to the wire, due to the initial head of 6 inches, is about 340 feet, so that in this case only about 50 feet per minute is added by the effect of gravity on the liquid traveling down the inclined wire. This is only a little over one-quarter as much as is imparted by the drag of the wire, so that in this case the effect of gravity on the slope is the insignificant one of the two factors, drag and gravity, if either be considered as such.

Q23. Mr. Carter produced a sheet of diagrams which was marked Sheet No. 1A, containing Diagrams No. 2, 3 and 4, which he stated represented substantially the conditions respecting the defendant's machines, as testified to by plaintiff's and defendant's witnesses, and including also in diagram No. 4 the arrangement of defendant's machine No. 2, with the pitch of 6 inches. I wish you would examine these diagrams, and if you find any differences between Mr. Carter's figures and your own, in respect to these same machines, explain how those occur, and state whether you find Mr. Carter's figures to be substantially correct, showing the operation of these machines. A. His figures are approximately the same as mine, although I believe not exactly the same throughout. I have taken round numbers, coming to the nearest five or ten, where he has taken intermediate numbers in some cases giving 137 feet, for example, where I should call it 140. The data of the question allowed considerable latitude, as the elevation was given as between 14 and 15 inches, for example, and head from 6 to 8 inches, and the figures assumed and computed by Mr. Carter, as well as those assumed and computed by me, would both be correctly representative of some construction within the limits given in the question.

Q24. State whether you find Mr. Carter has followed the same plan in arriving at the results, that you have done? A. Judging from the figures given by him, he has.

I notice that in giving what he calls the net pitch, in considering defendant's No. 2 machine, he calls it 2⅛ inches, while I take 2 inches, or 1/3 of the total pitch, as Mr. Carter appears to have done in the other diagram. I do not know just what he had in mind in taking the net pitch as a little more than a third of the total pitch, but this would be warranted on the data given, as the total length of the wire was given as 29 feet, and the point of equality, as somewhere from 9 to 10 feet from the slice.

I notice now that in the No. 4 diagram of defendant's No. 2 machine, he gives the point of equality as between 10 and 11 feet from the slice, which is a little further down than was assumed by me in the other cases. I do not know what his reason was for taking the distance as between 10 and 11 feet rather than between 9 and 10 feet, as was assumed in some of the preceding questions.

Q25. You haven't read Mr. Carter's testimony? A. I have not.

Q26. Except for these details to which you have referred the results are substantially the same in your figures and Mr. Carter's, as far as you observed? A. They are. I understand they are based upon the same data, and same law of acceleration due to gravity.

Q27. What change or adjustment would have to be made on defendant's machines, as represented by diagram No. 3, assuming the same head of 6 inches, and wire speed of 585 f. p. m. were retained, in order to have them operate in accordance with the principles in the Eibel patent? A. It would require an 18-inch head to give the speed of 585 f. p. m., and as the initial head is assumed to be 6 inches, this would require a pitch sufficient to give an additional drop of 12 inches down to the point where the equilibrium results, if the machine were to be adjusted in accordance with the plan set forth in the Eibel patent sued upon. As this pitch or drop of 12 inches takes place in about a third of the length of the wire, the total pitch or drop the full length, would be 36 inches; or, in other words, the breast-roll would have to be elevated to 36 inches above the horizontal plane passing through the lower end of the wire.

Q28. I call your attention to the testimony of plaintiff's expert, Mr. Aldrich, in the suit brought by this plaintiff against the Remington-Martin Company, as appears in pages 134-135 of the printed record in that suit, and a copy of which has been offered in evidence in this case. State whether in defendant's machines, arranged as described by either plaintiff's or defendant's witnesses, and as represented by either one of the dia-

grams 2, 3 or 4, on Carter diagram, sheet No. 1A, "The friction of the wire is a minor factor in the acceleration of the stock;" and also whether this friction is "insignificant, in comparison to the pitch;" and you may explain your answer. A. It is not. Assuming that equilibrium or equality of velocity is attained at the point indicated, the percentage of velocity due to the drag of the wire is, in all cases, more than 50 per cent of that due to the pitch, and in the No. 2 machine, it is nearly 300 per cent of that due to the pitch.

If either factor can be regarded as insignificant, it must be the action of gravity due to the pitch, rather than due to friction or drag of the wire.

Q29. Assuming, for the purposes of the question, that the Eibel patent in suit contemplates the employment of any desired head, and merely requires that the amount of increase in speed of the stock from the time it enters upon the making-wire until speed equality with the wire is reached, shall be substantially made up or produced by gravity due to the pitch of the wire, state whether the defendant's machines having any one of the descriptions set forth in the last few preceding questions, and represented by the Carter diagrams 2, 3 and 4, do or do not employ such Eibel arrangement and mode of operation? A. They do not. In none of them is the pitch sufficient to accelerate the flowing liquid up to a speed which can be regarded even as approximating the speed of the wire.

Q30. Mr. Carter has also produced three sheets, numbered 2, 2A and 3, containing diagrams of machines numbered consecutively from 5 to 16, both inclusive, and he has testified that such diagrams are laid out on a scale of one inch equals one foot; that they correspond generally in plan with the diagram shown on sheets Nos. 1 and 2; that in each case they indicate in the machine designated the elevation of breast and guide-roll to the pitch of the making-wire, and the location of the slice, and in some instances, the position of the first suction box; some of the diagrams indicate also the approximate position at the point where the stock reaches the speed of the wire, or smooths out in its travel down the wire; that the labels on each diagram state the data from which the diagram is laid out; that in addition, most of the diagrams bear a legend which gives the different factors involved in the accelerating of the speed of the stock up to the speed of the wire, under the conditions of use stated or assumed. Have you examined these diagrams, and do you understand the arrangement and mode of operation indicated by each of them, and if so, do you concur in the statements of velocities marked on said diagrams, as

obtained from the arrangement of head, pitch and speed, indicated? A. I have examined the diagrams, and understand the arrangement and mode of operation they are intended to represent. I concur substantially in the figures, although possibly in some cases I should have given slightly different figures from the same data, which allow some little range; for instance, taking the head, I notice that Mr. Carter appears to have taken a little less than the total head, he probably assuming a certain width of the stream issuing under the slice, and measuring his head about to the middle of the stream, instead of to the bottom. The figures represent fairly, and with quite a close approximation to accuracy, what would result from the conditions specified, in connection with the several arrangements.

Q31. Please compare the arrangement and mode of operation of defendant's machines, as testified to either by plaintiff or defendant's witnesses, and as represented by the Carter diagrams 2, 3 and 4, with the arrangement and mode of operation set forth in the Carter diagrams Nos. 5 to 14, both inclusive, and state whether you find any different principle or mode of operation involved in defendant's machines, from the principle and mode of operation of the machines illustrated in said Carter diagrams Nos. 5 to 14, both inclusive? A. I am unable to discover any difference in mode of operation between defendant's machine when operated as referred to in the preceding questions, and any of the machines shown in diagrams Nos. 5 to 14, inclusive, except possibly what is represented in Diagram No. 5.

In said Diagram No. 5, the paper speed, by which I understand is meant wire speed, is the same as the speed of the liquid produced by the effect of gravity on the initial head and on the slope of the wire, so that in this particular case, there is no velocity imparted to the liquid by the drag of the wire, in order to bring the liquid to an equality of velocity. It does not, however, appear to me that this involves or constitutes any substantial difference in mode of operation.

In all of the cases, including the defendant's, there are variable factors, namely, the speed of the wire, the initial head, and the pitch or slope of the wire, each of which may be varied, in accordance with the judgment of the operator, and two of which, namely, the head and the slope, have a controlling influence on the actual velocity of the liquid; while the third, namely, the wire speed, has an effect upon the relative velocity of the liquid acquired from the action of gravity, and the velocity of wire speed acquired from the driving power of the machine.

The several diagrams indicate various different adjustments

of head, and various different adjustments of slope or pitch, the two together, in any case, controlling the speed of the liquid in that case, and the two being variable, so that of that speed, a greater or less proportion may be contributed by either factor, namely, the initial head or the slope.

I assume that the diagrams are intended to represent what I understand is the common practice, namely capacity for varying the speed movement of the wire according to the work in hand, and the several diagrams show various correlations of these three factors, no one of which indicates or suggests any different mode of operation from the others, although they may represent various different adjustments of the several factors which may be found desirable, in order to obtain the desired quality of product from the machine.

Q32. Mr. Carter, in his testimony, has stated that in the machines examined by him in the mills he found usually the speed of the paper when it reached the calender rolls was somewhat greater than the speed of the making-wire, due to a stretching of the paper going through the pressers and dryers, and I think he stated that this increase in length was about 7 per cent. On a number of these diagrams he has given both the wire speed and paper speed. Would this fact make any difference in the general statement of your preceding answer? A. No.

Q33. Assuming that the arrangement and mode of operation of defendant's machines as hereinbefore stated comes within the description of the Eibel patent in suit, state whether you can see any way of differentiating or excluding from the description of said Eibel patent these machines and arrangements represented by the Carter Diagrams Nos. 5 to 14, both inclusive, to which your attention has been called. A. I cannot.

Q34. Assuming that the arrangement and mode of operation of the machines represented by the Carter Diagrams Nos. 5 to 14, both inclusive, do not fall within the description of the arrangement and mode of operation of the Eibel patent in suit, can you see any way of differentiating defendant's arrangement and mode of operation as testified to by either plaintiff's or defendant's witnesses and as represented by the Carter Diagrams Nos. 2, 3 and 4 that would exclude them from the arrangements and mode of operation of said Diagrams Nos. 5 to 14, both inclusive? A. No.

Q35. In testifying in the Remington-Martin suit, page 89 of the printed record, Mr. Aldrich says, referring to certain prior patents:

"In most cases the whole adjustment provided is from a position in which the breast-roll is below the level of the guide-roll, up to a horizontal position of the wire, and in no case is an adjustment provided such as to give the wire any material pitch even when the breast-roll is raised to the utmost possible extent, the adjustment evidently being limited to a possible inch or two above or below the level in all cases."

What do you find upon this point in the Barrett & Horne patent, No. 634,228? A. The Barrett & Horne patent refers to the desirability of giving a downward inclination to the wire and the desirability of being able to vary the amount of inclination or slope. It suggests nothing in the way of giving an upward inclination of the wire from the breast-roll.

(Direct examination closed.)

CROSS EXAMINATION.

By Mr. Lyman:

XQ36. Referring to the last named patent to Barrett & Horne, is it your understanding that Fig. 1 shows the wire on the level? A. I see nothing that indicates clearly whether it is intended to be so represented or not.

XQ37. In that figure the letter "E" represents the stationary rail supporting the suction box section, which is a level rail, and the rail supporting the breast-roll section appears to be a continuation of the same level line of the suction box rail, does it not? A. The portion of the stationary rail is so short that I do not feel positive about it; but, as near as I can judge, the movable Section A, is either in line with the stationary rail E or inclines downwardly towards it in the direction from right to left, which would be what we have called a downward inclination or pitch to the wire. My judgment is that it is intended to represent the shake-rail A as inclined downward towards the stationary section E.

XQ38. The breast-roll may be dropped below the level at which it is shown in Fig. 1, may it not? A. Yes. It appears to be supported on an intermediate portion of the cam, which might be turned to lower it from that position or to raise it. It appears to be considerably nearer the lower than the upper limit of the throw of the cam.

XQ39. Referring to the passage in the Eibel patent which you mention, at page 2, line 67, et seq., in which the patent refers to the matter of drainage, witnesses have testified in this case that where stock is moving at an equality of speed with the wire, the water drains more rapidly through the wire and more freely through the wire than where the stock is traveling

at a different speed from the wire. Is that probably correct? A. I do not see any reason why that should be so. The felting of the fibre on the wire would, I should judge, tend to clog the machine and make the drainage slower so that the drainage would become slower and slower from the time when the highly diluted stock first arrives to the time when the water is nearly all drained off and the fibre has all become lodged on the wire.

Except for this effect, I do not see why the drainage should be any more rapid from the water standing still on the wire, that is, having no motion relative to it, than it would if the water were flowing along the wire, that is, moving faster than the wire, or the wire was moving faster than the water, unless the difference in velocity was very great.

XQ40. Suppose water were standing still and the wire were moving at an infinite velocity under it. Would any water fall through there? A. Probably not. This is something like the alleged juggler's act of circling a sword about his head so rapidly that it acted as an umbrella and no rain could go through it.

XQ41. Is that not an extreme illustration of the reason, which may be a valid reason, why drainage is facilitated by making the stock run at the speed of the wire? A. Yes, except that, so far as I can judge without experiment, I should not expect to find any appreciable difference, unless the difference in speed was considerably greater than would arise in paper-making machines under any circumstances.

XQ42. What practical experience have you had with paper-making machines? A. None.

XQ43. You have seen certain machines in operation? A. Not Fourdrinier machines recently, at any rate. I have had occasion to consider paper-making machinery and observed the operation, but that was some years ago and I do not recall examining especially any Fourdrinier machine, as I was not concerned with that particular kind of machine.

XQ44. Is it your understanding of the Eibel patent that Eibel contemplates using no head at all behind the slice? A. The Eibel patent itself is entirely silent with reference to that point. Judging from Mr. Aldrich's testimony, a portion of which I have read, the Eibel construction was intended to be adopted in conjunction with a small head of 2 inches or less, such as results when the slice is used mainly to keep back froth and chips on the surface of the stock in the flow-box.

Mr. Aldrich, in explaining the usual construction of the machine which Eibel proposed to improve upon by increasing the pitch of the wire, describes the flow-box and slice, and cites as

an example that a hydraulic head of about 2¼ inches will give a velocity of about 200 feet per minute, and then says:

> "Various mechanical difficulties which need not be stated here in detail, limit the amount of head which can be conveniently carried, and so limit the initial velocity which can be given to the stock."

That, taken in connection with his description of the apparatus of the Eibel patent as a whole, leads me to suppose that he at least understood that Eibel contemplated using his plan in connection with a head that would not give it over 200 feet per minute initial velocity.

XQ45. I do not agree with your understanding of Mr. Aldrich's testimony, and should like to ask you to give us your own opinion, regardless of what Mr. Aldrich may or may not have testified, with regard to this point; that is to say, do you understand that the Eibel patent contemplates the use of no head at all, or of a minimum head, or of the ordinary head such as was in common use at his date? A. In view of the silence of the patent on this point and of the reference to what had been done in the art contained in the patent as a basis for explaining the alleged improvement of the patent, my judgment would be that it would naturally be assumed that the stock was delivered from the flow-box on to the wire in the way in which it had usually been done prior to the time of the Eibel patent.

If he had contemplated any unusual way of delivering the stuff on to the wire, it seems to me that it would certainly have been stated in the patent.

XQ46. Is it not a reasonable interpretation of the patent to consider that Eibel was dealing with the problem of increasing the velocity of stock on the wire from the velocity at which it entered upon the wire, which is less than that of the wire, to a velocity equal to the velocity of the wire? A. Yes, I think so. That is what I naturally understood from the patent itself and from the explanation of the patent and prior art given by Mr. Aldrich, which I also read in order to get as full an understanding of the subject as possible.

What I understood from this as a whole was that, as the art was then generally known, the stock was introduced at a velocity of about 200 feet per minute and that it was not practicable to increase the velocity of introduction and, consequently, Eibel, in order to give it a much higher velocity, proposed to tilt the wire downward in order to get the velocity he desired for his wire speed.

To summarize the matter, I understand that it was not considered practicable to give a much higher speed of introduction

than 200 feet per minute. If the wire ran horizontally at, say, 400 feet per minute, which I also understand from the testimony was about the extreme attained prior to Eibel's time, it would have a relative speed of 200 feet, which would cause very serious disturbance in the liquid before that acquired the same speed, owing to the drag of the wire.

Eibel, therefore (if we take these figures), proposed to tip his wire down enough so that the stock would pick up the lacking 200 feet velocity when traveling down the slope by the time it arrived at the point where it was necessary that the stream should be quiet or smooth for the proper paper-making operation, and thus to eliminate the disturbing effect due to the drag of the wire in bringing the stuff up to the velocity of the wire.

XQ47. I understood it to be Mr. Aldrich's testimony that the Eibel plan may be carried out whether the head back of the slice is high or low, the amount of head being material only in that it determines the relative speed existing between the stock as it issues upon the wire and the wire speed. Is that not a reasonable view to take in the matter? A. I would say that I understand that the Eibel patent assumed a large relative velocity or difference in velocity at the point where the stock enters upon the wire, the wire traveling faster than the stock, and that he proposes to bring about an equality of velocity by the action of gravity on the liquid, which he does by giving the wire the pitch or downward slope.

I understand that the purpose of bringing the liquid to the velocity of the wire by the action of gravity is to avoid the detrimental effect which he indicates results when it is brought to the velocity of the wire by the drag of the wire to any considerable extent.

XQ48. Could you answer the question a little more specifically? A. I hardly think that the statement given in your preceding question is one I should fully concur in as representing my understanding of what is meant in the Eibel patent, unless the statement given in your question means the same thing as what I have stated in my preceding answer.

XQ49. What I mean to ask is whether, in your understanding of the disclosure of the Eibel patent, you view it as limited in application to some specific head, or whether, on the contrary, it is not equally applicable to a machine running under varying degrees of head? A. I should not understand that it was limited to any one specific head, or even to the minimum attainable head.

XQ50. Is it a correct view of the Eibel patent to say that Eibel was planning to substitute the pitch of the wire as a

means for doing substantially the work which had been done in prior machines by drag of the wire? A. That seems to me correct.

XQ51. And, on that view, it is immaterial, from the point of view of the Eibel patent, whether a high head or a low head is employed, so long as there exists the relative velocity between the wire speed and the stock speed at the time the stock issues upon the wire, is it? A. I do not see that it makes any difference except in degree.

XQ52. Then, ought not one, in considering whether the pitch of the wire in any given installation is that which Eibel proposes, to consider only the relative velocity between the stock and wire when the stock issues upon the wire and the effect that pitch has thereafter in accelerating the stock to speed with the wire, and to disregard the matter of head except in so far as it determines that initial speed? A. I think so.

That is the way I treated the matter in considering the various examples of head, pitch, and wire speed that were inquired about in my direct examination.

XQ53. Is it your understanding that Eibel proposes to eliminate the element of drag entirely as a factor in accelerating the stock on the wire to the speed of the wire? A. I am inclined to agree with Mr. Aldrich's view on that, namely, that if the Eibel process is carried out, the effect of drag is insignificant in comparison with the effect of pitch.

Of course, whether Eibel recognized it or not, it is the fact that if there is a substantial relative velocity when the liquid comes on the wire, there must be some drag until the velocities become equal.

If the wire were horizontal, the equalizing of velocity would have to come entirely from the drag of the wire.

Eibel, as I understand, proposes to have it come entirely from the force of gravity, though, of course, he cannot entirely eliminate some dragging effect of the wire at the outset.

XQ54. Do you understand that Eibel contemplates eliminating drag entirely? I call your attention, for example, to the language of his patent on page 2, lines 58 to 64, particularly his expression: "or essentially by the wire." A. I understand that he proposes to eliminate it as far as it is possible to do it.

Of course, as I stated in my preceding answer, it is physically impossible entirely to eliminate the drag of the wire under the assumed conditions.

XQ55. He does not contemplate having the stock overrun the wire after it once reaches the point of speed equality, does

he? A. I should say not.

XQ56. Then, that means that, by the time the point of speed equality is reached, the friction or drag must have become preponderating, so that it controls rather than gravity, must it not? A. No.

If you assume the same fluidity in the stream, it must go on accelerating beyond the point of equilibrium so as to overrun the wire speed to very nearly the same extent that it has less velocity than the wire in coming up to the point of equilibrium.

As I understand, however, the fluidity of the stream as a whole on the wire is varying, being greatest at the top where it is more diluted, and diminishing down to the point where substantially all the water is drained out, at which point, of course, the fibre clings to the wire and has the same speed as the wire regardless of the effect of gravity.

XQ57. If there is to be no overrunning, the stock must have substantially lost its fluidity by the time the speed equality is reached, must it not? A. If there were to be no overrunning at all, it must have lost its fluidity at this time.

XQ58. The point where the stock loses its fluidity is not any definitely defined point, is it? It is a gradual change in condition? A. I should say that it would be difficult to define a point at one side of which the stock was fluid and at the other side non-fluid. As I understand, it passes rather gradually from a quite fluid or free condition to the non-fluid condition.

XQ59. Then, if there is to be no overrunning after speed equality is reached, isn't it inevitable that, in the stages immediately preceding the attainment of speed equality, the fluidity of the stock must have been rapidly diminishing and the effect of drag or friction correspondingly increasing? A. It depends a good deal upon the significance you give to such a word as "rapidly."

There probably is some moment or very short interval of time in which there is exact equality of movement of the wire and liquid; but I should judge that there was quite a little period before and beyond this point at which the difference in speed would be very small—giving a somewhat extensive range of length on which the speed could be regarded as equal for practical purposes. Up to that point the liquid would be gaining on the wire and also losing more or less of its fluidity, and beyond that point it would overrun the wire and still further lose its fluidity, and I should judge that the conditions were such that the overrunning that might occur beyond the point of equality would not be sufficient to have any detrimental effect.

XQ60. My question is whether it is not inevitable if you are going to run your machine in such a way that the stock will not overrun after reaching speed equality with the wire to any substantial extent, that immediately before that stage is reached the stock must have lost its fluidity to such an extent that the drag is an important factor in acceleration? A. I don't see that I can make my view any clearer than I did in my preceding answer. I do not think that the present question is one that warrants or admits of a direct, unqualified affirmative or negative answer.

(Adjourned.)

607 Old South Building, Boston, Mass., Friday, January 11, 1918.

Met pursuant to adjournment. Present as before.

Cross examination of Joseph P. Livermore, resumed.

By Mr. Lyman:

XQ61. Is it your understanding that the drag which aids in bringing the speed of the stock up to the speed of the wire in the defendant's machines, operates uniformly throughout the distance from the slice to the point of speed equality? A. Probably not. There are several factors which tend to make the dragging effect variable.

The frictional resistance to a liquid flowing in a conduit varies with the speed, and increases more rapidly than the speed difference increases. The dragging effect would, therefore, be greater at the outset, when the velocity difference was greater, than later on when the velocity difference became less.

The frictional resistance also would vary in a stream of this kind, with the depth of the stream. A stream one inch deep would be less affected than a stream a half an inch deep. So far as this factor is concerned, therefore, the dragging effect would tend to increase as you go further down the stream, because, even ignoring drainage, the stream becomes thinner or more shallow as its velocity increases; for example, if the stream started an inch deep and with the velocity of 200 feet a minute, and its velocity increased to 400 feet a minute, it would be only a half an inch deep; and the frictional drag on the stream as a whole, would be greater than when the stream was an inch deep.

Further than that, in the present case, the stream is becoming shallower, not only by reason of increased velocity, but because of the drainage through the wire.

I think it would be impossible to get at the relative values of these factors and possibly others that might be present in the material under consideration, except by carefully conducted

experiments to determine the several values.

It might come out that, the conditions existing in the machine, the effect of drag was practically constant, because the factors that tended to increase the dragging effect just balanced those which tended to diminish it.

I might add that the factors that I have mentioned, and which naturally occur to me, would be present in a highly fluid substance such as water, and would undoubtedly be varied more or less by the fact that in the paper stock the water carried a lot of fibre in suspension.

XQ62. Isn't the fact that the stock is becoming less and less fluid all the time another element in the case which may be of determining importance? A. That is what I just referred to, that it is quite possible owing to the fact that the fluid has fibre in suspension, that as the amount of dilution diminishes and the fibre comes nearer together, the fluidity diminishes.

XQ63. Does the rate of speed which the stock has at different points on the wire, increase at a uniform rate for given distances down the wire from the slice? I mean, is the acceleration uniform per foot of distance down the wire? A. No. Assuming the free flowing of the liquid, unaffected by drainage variation in viscosity or fluidity and the like, the acceleration would be uniform in equal periods of time, and would be less and less per foot of distance as you go down the wire, because, owing to the acceleration, each foot of distance is traveled in less and less time.

XQ64. Have you any means, short of actual experimentation, of determining with reference to the defendant's machines, for example what the different factors of drag and pitch have contributed to speed of the stock at a point 1 foot or 2 feet or 3 feet toward the breast-roll from the point of speed equality? A. I should say not. The acceleration due to the pitch, however, is what is due to the force of gravity, and that individual factor depends upon a known law, and can be computed if the pitch, the distance along the pitch and velocity at the outset at any given point on the pitch, is known. All of the other factors, including the drag of the wire and the variable conditions that modify the dragging effect or variations, could probably be only ascertained by actual experiment.

Some of these factors may be nearly enough the same as those that have already been investigated, that tables given for the flow of liquids in general, would apply; but probably the best way to ascertain correctly what the effect is, would be by actual experiment.

XQ65. Would you care to make any estimate as to the re-

spective values of the contribution to acceleration by the two factors of drag and pitch, at a point on the wires of defendant's machines say a foot toward the breast-roll, from the point of speed equality, as assumed on the diagrams? A. I could state what the acceleration due to the force of gravity is at that point, or the velocity due to the force of gravity is, at that point.

XQ66. But not knowing the actual velocity at that point, you could not estimate the effect of drag at that point? A. No.

XQ67. Now I ask whether you could venture any prediction as to the relative values of those two contributing factors at that point, without any actual knowledge? A. I could not.

XQ68. Take a point two or three feet down the wire from the slice, would you be able to give us any estimate as to the relative values of the two contributing factors at that point? A. No, I could only give the actual value of what is due to the force of gravity, depending upon the steepness of the pitch.

XQ69. I believe that Mr. Carter, in figuring out what part of the speed of stock at a given point on the defendant's wires, was produced by pitch, first calculated the total velocity due to total head to that point, and subtracted from that the velocity due to the initial head alone. Now conversely, isn't it just as proper to say that the portion of the effect due to head on those machines, is to be obtained by taking the total combined effect of pitch and head, and subtracting the effect due to pitch? A. Certainly. Of course you can't transpose the sequence of the two factors, in making such computation. That is, the result is not the same if the pitch comes first and the vertical drop second, that it is if the vertical drop comes first and the pitch second. The total, in both cases, is the same; but generally speaking, the first one of the two contributes the larger proportion of the total, whichever comes first.

The result is, if you had a 2-foot drop, 1 foot vertical and the second down a 10 per cent incline, we will say, the total velocity would be 684 feet; but out of that the velocity acquired in the first foot drop would be 481 feet a minute, and it makes no difference which comes first. If the run is down the slope first, there will be 481 feet due to slope, and the balance of about 200, due to vertical drop. If, on the other hand, the vertical drop comes first, there will be 481 feet due to that, and the balance of 200 due to the slope.

XQ70. Then where you have the two factors tending to produce a certain speed at a given point, is it just as fair to say that the effect due to head is to be ascertained by subtracting from the total effect due to pitch and head, in the instance proposed in Diagram No. 3, for example, 10½ inches, the velocity

which would have been produced by the 4½ inch pitch alone, as it is to calculate the effect due to pitch by subtracting from the effect due to the combined factors, the velocity which would have been contributed by head alone, of 6 inches, had the wire been flat? A. Yes, but in considering the velocity due to pitch alone, one must take into account the initial velocity at which the pitch begins to act. That is, the increase in velocity in the first 10 feet drop is not the same if the velocity at the start is 100 feet or is 200 feet or is zero. The general formula for ascertaining the velocity due to fall is $b^2 = 2gh$; but where the increase in velocity between given points in the fall is to be ascertained, you have to take into account the velocity already acquired at the starting point, and compute the accelerating effect on that velocity, in the portion of the fall that is being investigated.

XQ71. In the case of machines like those involved in this case, when you are calculating the effect of pitch on the wire and when what you have is not a pitch with no head involved but a pitch and a head and a speed resulting from those combined factors, is not permissible to figure that the relative contributions to the resulting speed are proportional to the vertical drop involved in the two respectively? A. No, certainly not. As I have already pointed out, the first part of the drop contributes more to velocity than the last part, so that, for example, if the two parts are equal, whichever came first would contribute about two-thirds of the total and the one which came second about one-third.

XQ72. Coming back to a point which we had touched upon previously, is it not inevitable that if substantial overrunning is to be avoided, the drag or friction of the wire on the stock must have become the controlling factor, dominating over gravity prior to the point of speed equality having been reached between stock and wire? A. I don't think so. I should say that the drag or hold of the wire must become predominant in order to prevent overrunning by the time that the overrunning would begin to appear, which would, of course, be beyond the point of equality.

As I indicated in a previous answer this morning, certain factors that tend to increase the hold of the wire increase in effect as the stream advances.

What I should think was the principal factor was the diminution in depth of stream due to increasing velocity and drainage, and by the time the point of equality of speed had been reached, these factors might be just coming to a balance with the accelerating force of gravity so that no further acceleration or

overrunning would be produced.

XQ73. At any rate, it is inevitable, is it not, that if the machine is to be arranged in such a way that there will not be overrunning, the force or influence of drag must have been approaching close, at least, to the influence of gravity prior to the point of speed equality? A. It does not strike me that way.

As I understand it, the influence of drag is becoming less and less as the point of speed equality is approached and is practically nil at the point of speed equality and only can act at all to diminish overrunning if there is overrunning.

Of course, at the moment when there is speed equality there is no drag, but there is a sort of adhesion between the wire and the liquid which will cause drag if, and only if, the velocity of the liquid begins to differ from that of the wire. This adhesion is what would prevent overrunning, if anything, and the drag of the wire would simply diminish or reduce the overrunning if any should occur.

XQ74. Why do you say the influence of drag is becoming less and less as the point of speed equality is reached? A. Because the frictional effect increases with the velocity and I believe nearly with the square of the velocity, except when the velocity is very small.

Of course, at the moment of equality of speed there can be no such thing as drag, because the very term implies the effect of one thing moving relative to the other.

The cohesion or whatever hold there is of the wire on the stream when both are at the same speed so that there is no flow or travel of one thing along the other is something different from the action of one upon the other when there is travel.

I do not know what the relative values of these two actions or effects of the wire on the liquid are.

XQ75. When you say that the drag of the wire is becoming less and less as the point of speed equality is reached, do you mean that the effect of the wire in accelerating the stock or bringing the stock to speed equality with the wire is becoming less and less as the point of speed equality is reached? A. Yes. Whatever effect the wire may have on the acceleration of the stock must come from the fact that the wire and stock are moving at a different speed. When the wire is moving faster than the stock, whatever effect it has must be to positively accelerate or increase the speed of the stock, and when the wire is moving more slowly than the stock the acceleration would be negative and act to diminish the speed or to diminish the amount of acceleration or increase in speed that would take place except for such effect of the wire.

XQ76. I judge that you would agree that Eibel did not contemplate eliminating the influence of drag entirely? A. Speaking from a psychological standpoint, it seems to me that that is what he had in mind and what he tried to instruct others to do by his patent.

Speaking from a practical standpoint, it is impossible to do it by the construction or arrangement shown by Eibel, whether he recognized that fact or not.

I should certainly say he intended to eliminate the effect of drag as far as it could possibly be done, and that certainly is all there is which distinguishes his plan from what is commonly done by tipping the wire downward but to a less degree than what is sufficient to bring the velocity of the liquid up to the velocity of the wire principally by the force of gravity and so as to make the influence of drag practically insignificant in bringing the speed of the liquid to the speed of the wire.

XQ77. Regardless of what you think Eibel himself may or may not have contemplated in this respect, do you think that the subject matter of his patent and claims is embodied only in a machine in which drag is entirely eliminated as a factor in accelerating the stock? A. No, in that event the subject matter of the patent could not be embodied in any machine.

XQ78. Is it a fair view of Eibel's patent to say that he had found that when drag was entirely relied upon as the means of accelerating the stock and overcoming difference of velocity between it and the wire, the commotion on the stock prevented speeding up the wire beyond a certain limit, he prescribed that that limit of speed could be raised by giving a substantial pitch to the wire, and that so long as drag was not relied upon or used to a greater extent than it had been used before at the slower speed machines, it was permissible and possible to rely upon or use it in conjunction with his pitch? A. Whether or not that is the fair view it seems to me is a matter outside of my province and I can only state that I do not gather any such idea as that from a reading of the patent.

Taking the reading of the patent with what I understand to have been practised prior to Eibel's time, it seems to me that unless he did eliminate drag effect to practically the maximum attainable, he did nothing whatever distinguishable in any way from what was done before.

Precisely the same mechanical arrangement and operative factors were used before. His patent emphasizes the feature of pitch or downward inclination and, as I understand it, he says to use that pitch so that the acceleration of gravity will give the stock the wire speed at some appropriate point down on the wire.

Others have used such pitch, according to my understanding, but with another object emphasized or mainly in view, namely, that of controlling the drainage or bringing the stock in the right condition as to amount of dilution at the desired point.

Whatever Eibel or others may have had in mind as to the purpose of inclining the wire downward, that downward inclination inevitably causes gravity to accelerate the stream as compared with the speed which it would have if the wire were horizontal, and, consequently, if the wire speed is greater than the speed of the liquid when the liquid comes on, as I also understand was frequently the case on prior practice, the downward inclination of the wire, whatever the paper-maker had in mind, would inevitably diminish the dragging effect of the wire required to bring the velocity of the liquid up to the velocity of the wire.

XQ79. What do you understand the patent to mean by the term "substantial elevation"? A. Both as a matter of common language and from the context, I understand it to mean such an elevation as would effect a practical departure of the wire from the horizontal position and such as would cause a flow or current in a liquid on such inclined surface.

That is, it would not include such a slight elevation as would have no practical effect upon the flow of the liquid in the conditions of operation of the machine.

XQ80. Can you state what the minimum of what a substantial elevation would be in inches? A. No, I haven't in mind just the grades that are used to give moderate rates of flow of liquids, but I would say that a ten per cent grade is a pretty stiff one, and I think that less than one per cent is very effective for giving a flow of a liquid in an open conduit. A one per cent grade would be about four inches in 33 feet, and as 33 feet is not far from the length of the sloping part of the wire on these machines, I should say that an elevation of four inches was a substantial elevation when considered from the standpoint of having an accelerating effect on the liquid.

I should think that the minimum that would have a practical effect in the operation would be considerably less than this, but from ordinary usage or from what is indicated by the context in the Eibel patent I should say, for example, that all of the grades or amounts of elevation of the breast-roll shown in the Carter Diagrams Nos. 1 to 14, inclusive, and Diagram No. 16 would properly be called substantial amounts of elevation, unless what was meant was further defined in some way.

XQ81. In your answer to XQ78 you refer to others who have used the pitch prior to Eibel. To whom do you have reference

in that answer? A. I was not speaking from my own knowledge but from what I understand has been indicated in the testimony in this case.

The Barrett and Horne patent, No. 634,228, however, relates to means for varying such pitch and seems to me to fully warrant the assumption on my part that, as early as the time of that patent, at any rate, in 1899, it was a part of the practice in the art to employ a downward pitch in the wire and to provide for varying the amount of the downward pitch by the paper-maker using the machine.

XQ82. What I wanted to know was what prior machines you had in mind in making the answer to that question XQ78? A. I had no specific prior machines in mind, and the only matter within my own knowledge on which that understanding was based is the patent of Barrett and Horne and the other two or three patents that were mentioned in my direct but about which I gave no testimony.

These patents all show provision for raising and lowering the breast-roll to vary the pitch of the wire and it seemed to me that they afford a strong presumption that it was a frequent practice in the art to have the wire pitched instead of horizontal and to use different degrees of pitch according to the requirements of the work in hand.

XQ83. Eibel also uses the expression "the normal speed of the wire." What do you understand that means? See, for example, Claim 2. A. I really could not make out what he does mean by that expression.

He gives no actual speeds at all, and as near as I can make out when he speaks of normal speed he means the speed that was commonly used by paper-makers in running that kind of machine.

Speaking from what I have gathered from the testimony, this varied very widely, from a very low speed, less than 100 feet a minute for some grades of paper, up to a much higher speed, for other grades of paper.

So far as I can see, what Eibel means by "normal speed" might be almost anything; but, as I understand, he attempts to convey the idea that whatever speed any machine may have, he can make it run faster.

XQ84. You understand, however, that when he was dealing with high speed machines he purported to do away with a limitation upon speed which had theretofore prevented further increase; is that correct? A. I understand that he was dealing with high speed machines, and furthermore was dealing with machines in which the stock was delivered to the wire with an

initial velocity much less than that of the wire and with such difference in velocity that if the wire were horizontal and there was no acceleration of the stock by gravity after it entered upon the wire, the speed of the machine could not be increased without impairing the quality of the paper produced.

XQ85. These diagrams of Mr. Carter's are based upon the assumption that speed equality must take place at a point practically one-third of the distance down the wire, are they not? A. Yes, or, as I should state it, they are to show what are the factors that produce the speed equality if it be assumed that speed equality is attained at a certain designated point on the wire.

XQ86. You have no knowledge, I suppose, as to whether it is necessary or customary for machines to be so arranged that speed equality does occur one-third of the distance down the wire? A. No, I have no personal knowledge on that point.

XQ87. Have you any knowledge as to whether an initial speed of 200 feet a minute is high enough to be practicable on a machine running at high speed; for example, at 550 or 585 wire speed per minute? A. I have not any actual knowledge on the point.

My judgment is that it would be difficult if not impracticable to make good paper with a wire speed of 550 feet a minute and an initial speed of 200 feet a minute in the stuff.

XQ88. Why is that? Because of the great thickness of stream that would be required in that case at the slice? A. No. My only thought was there would be too great a difference between wire speed and speed of the liquid for good results, even if the liquid were accelerated as much as is practicable after it came onto the wire. I may be wrong in this, but from my understanding of the subject derived from the study of this case and especially accepting the statements of the Eibel patent, so far as they are intelligible, at face value, I should expect that good results could not be obtained.

XQ89. As I understand the purpose of Diagram No. 1A of Mr. Carter, it is to show that, with the wire pitched to substantially the extent shown in Eibel's patent, a machine following the Eibel invention would run only at about 276 feet per minute wire speed. Do you agree with that proposition? A. I don't understand that that was exactly the purpose of the diagram, which was rather to show the discrepancy of wire speed and stock speed if the wire speed were 585 feet per minute.

The diagram does, however, illustrate that if the Eibel patent were followed and the stuff were introduced without any initial velocity at all, the wire speed would only be about 276 feet per minute.

Practically, it would be somewhat more, as, of course, the drag of the wire would enhance the effect of gravity, but this factor is not referred to at all in the Eibel patent and was regarded by Mr. Aldrich, as I understand his testimony, as an insignificant if not negligible factor in the operation.

XQ90. How much additional speed does the pitch on the wire of defendant's machines allow those machines to have beyond what they might have with a level wire? A. As I understand the subject, the correct answer to this would be none.

If, however, the initial head were kept the same, I should judge that the pitch might enable the machine to be run at a somewhat higher speed than if the wire were horizontal.

On purely theoretical considerations and on such assumptions as have been made as to the necessity for bringing the wire speed and stock speed to an equilibrium at different points, defendant's machines adjusted to the slope shown in Diagram No. 2 would run about thirty per cent faster with the slope than with the wire horizontal. Adjusted as in Diagram No. 3, it would run about 20 per cent faster, and adjusted as in Diagram No. 4 it would run about 12 per cent faster.

The fact, however, if it be a fact, that defendant's machines turn out a satisfactory product with all of these three adjustments would appear to show that the exact amount of inclination of the wire was not a very important factor in the operation, and that a very considerable difference between wire speed and stock speed at the time of introduction with very little modification or reduction due to the action of gravity after the stock came onto the wire would not preclude a satisfactory operation of the machine.

XQ91. Do you regard the use of a substantially elevated breast-roll a good thing in paper making? A. I really do not know enough about the subject practically to form a judgment on that point.

From theoretical considerations and taking into account only such factors as are referred to at all in the Eibel patent, it seems to me that the best way, theoretically speaking, would be to have the wire level and give head enough in the flow box to lay the stuff onto the wire at a speed sufficiently near that of the wire to give the desired effect.

It might, however, be desirable to give some accelerating effect due to gravity after the stock had got onto the wire which might be done by tilting the wire from the horizontal, this being outside of the tilting that is referred to by Eibel as his contribution to the art, but rather like what he refers to in saying that the elevation of the breast-roll will vary according to the

grade of the stock. It is not very clear, however, just what Eibel does refer to in this statement.

XQ92. When Eibel speaks of causing the stock to travel by gravity at a speed approximately equal to the speed of the making-wire, do you understand him to mean that the effect of gravity due to the declination of the wire is to be the predominating influence in accelerating the stock from the initial velocity which it has when it enters upon the wire to the speed of the wire? If not, how do you understand it? A. Judging from the patent alone, I should understand it as meaning that the effect of gravity due to the pitch of the wire is what gives the stock the velocity at which the wire travels and is the only factor worth considering as giving the velocity to the stock.

The patent is absolutely silent with reference to any initial velocity or any provision for giving initial velocity.

Taking the patent with an understanding of the prior art or common practice in the art prior to the Eibel patent, which I understand from the testimony to be that the stock was commonly delivered on the wire with a velocity of about 200 feet per minute or less and that it was generally considered impracticable or undesirable to give a greater initial velocity, I should say that the Eibel patent might be understood as meaning that the effect of gravity due to the inclination of the wire is the principal factor in bringing the stuff from its initial velocity up to the velocity of the wire at some desired point between the breast-roll and the suction boxes.

XQ93. Are you able to say how thick a stream ought to be flowed upon the wire for a wire speed of 585 feet per minute? A. No.

The thickness might well be varied within considerably wide limits. For example, if it were introduced with a 2-inch head, it would be about twice as thick as if introduced with an 8-inch head.

The capacity for varying the initial head and for varying the slope of the wire enables the paper-maker to vary the factors that enter into the producing of the speed of the stuff, thickness or depth of stream at the outset, and at other points along the wire, the point at which the stream becomes quiescent or at an equilibrium with the speed of the wire, and so on.

I judge that paper-makers vary these several factors more or less, according to their judgment, and that the natural or normal variation in slope of the wire might depend largely upon what initial head was chosen, being, for example, nil if head enough was used to give the stuff the velocity of the wire, or approximately that, at the outset, up to the maximum which would

be found necessary if the stuff were introduced at about the lowest practicable speed, or say about 200 feet per minute.

I do not see that any different mode of operation or principle of operation would be exhibited throughout this entire range of variation of initial head and variation of pitch or inclination of the wire.

XQ94. In the Barrett and Horne patent, No. 634,228, which you have previously referred to, there is a statement of the purpose of the breast-roll adjustment provided in the machine at page 1, lines 26 to 30, and that I take to be substantially what you refer to in your answer to XQ78. Does this purpose have anything in common with the theory of the Eibel patent? A. I should say not. It looks to me as if Barrett and Horne referred to the adjustment of inclination with one effect in mind, and that Eibel referred to like adjustment with another effect in mind.

Of course, whatever effect the adjustment will produce will be just the same whether an operator had that particular effect in mind or not in making the adjustment.

In this particular case, the two effects have, so far as I can see, no special correlation to one another, and an adjustment made with one effect in mind might or might not produce a desirable effect as to the other function or phenomenon.

XQ95. Have you any opinion as to whether or not it is important that prior to the point when speed equality between stock and wire is attained that the stock be approaching the speed of the wire or within certain limits of speed difference from the wire, or is the only important thing that at the point where the stock settles down on the wire there be speed equality? A. I have not.

XQ96. Have you any opinion as to whether or not it is important that, prior to the time when the stock settles down on the wire and becomes felted, it should have approached the speed of the wire, or is the only important thing that speed equality exists at the time when the felting takes place? A. I have no opinion on the matter, but my judgment is that a considerable variation between the speed of wire and of the stock would not be objectionable provided that the stream was fairly quiet or free from ripples or waves.

Cross examination closed.

RE-DIRECT EXAMINATION.

By Mr. Paul:

RDQ97. If the mode of operation forming the subject of the Eibel patent consists in giving added velocity to the stock by gravity due to the pitch of the wire without regard to the prac-

tically total elimination of drag of the wire, wherein does it differ from what is shown in the Carter Diagrams Nos. 5 to 14, both inclusive? A. Not at all.

RDQ98. I call your attention to your answer to XQ45, in which you refer to certain practices which you say you understand from the testimony, and I think you also made reference later to these same practices. To what testimony were you referring in making this answer and similar statements? A. To Mr. Aldrich's testimony and to what is given in his affidavit in this case.

That was the principal testimony considered by me and I think that practically all of the assumptions that I have made both in the direct and cross as to the mode of operation forming the subject of the Eibel patent and as to the differentiation thereof from the prior art as recognized in that patent, were based upon Mr. Aldrich's testimony and were what I took to be a practically agreed upon state of facts, as I saw nothing that seemed to me to misstate the facts in Mr. Aldrich's testimony.

Deposition closed.

Mr. Paul: You waive signature?

Mr. Lyman: Yes.

(Adjourned.)

Printing of notary's certificate waived.

STIPULATION.

It is hereby stipulated by and between counsel for the respective parties to the above entitled cause that if Louis C. Smith were called as a witness, he would testify: that he is a member of the firm of Heard, Smith and Tennant, attorneys and counsellors at law;

That this firm is a successor to the firm of Crosby & Gregory;

That he was first employed by the firm of Crosby and Gregory on or about the tenth day of June, 1900, and remained with said firm until it was succeeded by the present firm of Heard, Smith and Tennant.

That it was the practice of the firm of Crosby and Gregory in preparing applications for patents to place in each file a draftsman's card prepared at the time bearing memoranda showing from what the Patent Office drawings were made, whether made from a machine, model, blue-print, sketch, et cetera.

That he personally prepared the application upon which was issued the Barrett and Horne patent No. 691,333; that he has examined and has produced, for the inspection of counsel, the Crosby and Gregory file of said application; and that in said application file is such a memorandum card reading as follows:

"Draughting Room 1-240.
Inventor J. H. Horne
Address
Invention Machine For Making Paper
Received June 1, 1901.
Pencilled by Allen 4-1¾
Time Greenleaf 1
Inked by Lunsford ½-4-3¼
Time 2½
Lettered by Lunsford
Total Time 17 hours.
Blue printed
Drawn from Blue Prints
Returned
2 Dys
Crosby & Gregory
34 School Street, Boston, Mass."

That these entries were made under his supervision in the regular course of business and indicate that the blue-prints from which the drawings were made were received by him and turned over to his draftsman on June 1, 1901;

That the names Allen, Greenleaf and Lunsford are the names of draftsmen in the employ of Crosby and Gregory at that time;

That the drafting room Number 1-240 is the same number appearing upon the Crosby and Gregory office file for said application for said patent (No. 691,333); and is the record relating to the drawings for said application although the name of J. H. Horne was entered by the draftsman on the drafting room

In Equity No. 769.

Eibel Process Company,

Plaintiff,

vs.

Minnesota & Ontario Paper Company,
(formerly Minnesota & Ontario Power Company),

Defendant.

Defendant's Supplemental Record.

Livingston Gifford,
Of Counsel.

Nathan Heard,
Defendant's Solicitor.

Amasa C. Paul,
For Defendant.

DISTRICT COURT OF THE UNITED STATES
DISTRICT OF MAINE.

In Equity No. 769.

EIBEL PROCESS COMPANY,

Plaintiff,

vs.

MINNESOTA & ONTARIO PAPER COMPANY,

Defendant.

AFFIDAVIT OF JAMES M. MURRAY.

James M. Murray, being duly sworn deposes and says that he is the mill manager of the International Paper Company, and is personally familiar with the Glen Mill of that company, located at Berlin, New Hampshire, and with the Fourdrinier Paper Machines located therein; that machine No. 5 is a Rice, Barton & Fales machine having a wire width of one hundred and three inches, and the No. 2 machine is a Pusey & Jones machine having a wire width of one hundred and twenty-two inches; that for a number of years prior to about the middle of 1918, these machines were operated with the paper-making Fourdrinier wire having a pitch of 6 to 11 inches and a wire speed of 350 to 465 feet per minute; that said machines were operated under license from the Eibel Process Company; that on or about July 25th, 1918, the wire on the No. 5 machine was changed to a flat or horizontal position and said machine has since been continuously operated with said flat wire; that no change has been made in the speed of the machine since the flat wire was adopted; that on July 31st, 1918, the International Paper Company notified the Eibel Process Company that it withdrew this machine from the license under the Eibel patent; that the No. 2 machine was changed to a flat wire on or about September 1st, 1918,

and has since been operated continuously with the flat wire and at the same speed as before; that this machine was withdrawn from the Eibel license by letter dated September 5th, 1918.

JAMES M. MURRAY.

Subscribed and sworn to before me this 4th day of March, 1920.

JOHN S. GIBB,
Notary Public.

(SEAL)

DISTRICT COURT OF THE UNITED STATES
DISTRICT OF MAINE,

In Equity No. 769.

EIBEL PROCESS COMPANY,

Plaintiff,

vs.

MINNESOTA & ONTARIO PAPER COMPANY,

Defendant.

AFFIDAVIT OF A. W. BRONK.

STATE OF MINNESOTA,

ss.

County of Koochiching.

A. W. Bronk, being first duly sworn, deposes and says, that he is the mill superintendent of the Minnesota & Ontario Paper Company (formerly the Minnesota & Ontario Power Company) at International Falls, Minnesota; that he is personally familiar with the Glen Mill of the International Paper Company, located at Berlin, New Hampshire, and with the Rice-Barton & Fales Fourdrinier paper machine located in said mill known as No. 5, and also with the Pusey & Jones Fourdrinier paper machine located in the said mill and known as machine No. 2; that he is also acquainted with James M. Murray, mill manager of the International Paper Com-

pany, and has read the affidavit executed by said Murray in the above entitled cause on March 4, 1920, relating to said No. 5 and No. 2 machines; that some time during the second half of the year 1918 this affiant saw in said Glen Mill said No. 5 and No. 2 machines; and watched the operation of the same at two different times for a period of about thirty minutes each; that both of said machines were at the time affiant observed them making news-print paper; that the No. 5 machine was running at a speed close on to four hundred feet per minute, perhaps slightly under, while the No. 2 machine was running at a speed of over four hundred feet per minute; that both machines were running with the making wire of the Fourdrinier in a horizontal position; that neither machine when he examined them had a slice but there was an inclined apron running to the head over which the stock flowed on to the wire; that the paper being made at these times on these machines looked better than, and was in affiant's judgment fully equal in quality to the paper being made on the other machines in the same mill having the making wires arranged at a substantial pitch; and that Mr. Murray called affiant's attention to this fact while affiant was examining said machines; that affiant has made a sketch and attaches hereto a blue print reproduction thereof, showing the arrangement of the Fourdrinier, the deckle straps, flow box, apron board and apron, as used on said machines at the time the same were examined by affiant; that the sketch is made from memory but is a substantially accurate representation of the parts shown therein, indicating also the length of the apron and the amount of pitch thereto.

A. W. BRONK.

Subscribed and sworn to before me this 24th day of April, 1920.

A. CARRIER,
(Seal) Notary Public,
Koochiching County, Minnesota.

My commission expires May 9, 1926.

DISTRICT COURT OF THE UNITED STATES
DISTRICT OF MAINE.
In Equity No. 769.

EIBEL PROCESS COMPANY,
Plaintiff,

vs.

MINNESOTA & ONTARIO PAPER COMPANY,
Defendant.

AFFIDAVIT OF L. G. WILSON,

STATE OF MINNESOTA,
ss
County of Koochiching.

L. G. Wilson, being first duly sworn, deposes and says that he is the auditor of the Minnesota & Ontario Paper Company (formerly the Minnesota & Ontario Power Company), the above named defendant, and as such auditor he has charge of all of the records of said company, including the daily records of production of newsprint paper by each of the four machines in the paper mill of said company at International Falls, Minnesota; that the sheets attached hereto numbered 1 to 27, both inclusive, and each identified by affiant's signature placed near the bottom of the sheet are the duplicate records of said company showing the daily production in tons of newsprint paper made by each of the four machines of said com-

pany in its mill at International Falls, Minnesota, for the period commencing with April 2, 1917, and extending to and including June 30, 1919; and that the said sheets correctly show the production of paper in said mill for the period specified.

L. G. WILSON.

Subscribed and sworn to before me this 10th day of June, 1920.

A. CARRIER,
Notary Public,
Koochiching County, Minnesota.

(Seal)

My commission expires May 9, 1926.

DISTRICT COURT OF THE UNITED STATES
DISTRICT OF MAINE.
In Equity No. 769.

EIBEL PROCESS COMPANY,
Plaintiff,

vs.

MINNESOTA & ONTARIO PAPER COMPANY,
Defendant.

AFFIDAVIT OF L. G. WILSON.

STATE OF MINNESOTA,
ss.
County of Koochiching.

L. G. Wilson, being first duly sworn, deposes and says that he is the auditor of the Minnesota & Ontario Paper Company (formerly the Minnesota & Ontario Power Company), the above named defendant, and as such auditor he has charge of all of the records of said company, including the daily records of production of newsprint paper by each of the four machines in the paper mill of said

company at International Falls, Minnesota; that the sheets attached hereto numbered 28 to 41, both inclusive, and each identified by affiant's signature placed near the bottom of the sheet are the duplicate records of said company showing the daily production in tons of newsprint paper made by each of the four machines of said company in its mill at International Falls, Minnesota, for the months of January, February and March, 1917, and for the period of July, 1919, to and including May, 1920, and that the said sheets correctly show the production of paper in said mill for the period specified.

L. G. WILSON.

Subscribed and sworn to before me this 21st day of July, 1920.

A. CARRIER,
Notary Public,
Koochiching County, Minnesota.

(Seal)

My commission expires May 9th, 1926.

CLERK'S CERTIFICATE.

UNITED STATES OF AMERICA,
DISTRICT OF MAINE, ss.

I, George C. Wheeler, Clerk of the District Court of the United States for the District of Maine within the First Circuit, hereby certify that the two (2) volumes entitled as follows: —

Volume I, Plaintiff's Record and Proceedings in District Court;

Volume II, Defendant's Record and Supplemental Record;

this certificate being attached to each of said two volumes, constitute the Transcript of the Record on Appeal, including true copies of such proofs, entries and papers on file as have been designated by praecipe in the cause in equity entitled,

No. 769.

EIBEL PROCESS COMPANY, PLAINTIFF,

v.

MINNESOTA & ONTARIO PAPER COMPANY, DEFENDANT,
(FORMERLY MINNESOTA & ONTARIO POWER COMPANY,)

in said District Court determined, together with the original Citation issued upon the Appeal of the defendant with the Acknowledgment of Service thereon and together with the original Orders of Court Extending Time for Filing this Transcript of Record in the United States Circuit Court of Appeals.

In testimony whereof, I hereunto set my hand and affixed the seal of said District Court, at Portland, in said District, this nineteenth day of February, 1921.

[SEAL] GEORGE C. WHEELER, *Clerk.*

I, Arthur I. Charron, Clerk of the United States Circuit Court of Appeals for the First Circuit, certify that the printed volumes entitled as follows:

Volume I, Plaintiff's Record and Proceedings in District Court and Circuit Court of Appeals;
Volume II, Defendant's Record and Supplemental Record;
Volume III, Exhibit Book,

this certificate being attached to each of said volumes, contain and are a true copy of the record and all proceedings to and including August 31, 1921, in the cause in said court numbered and entitled as follows: No. 1504, Minnesota & Ontario Paper Company, Defendant, Appellant, v. Eibel Process Company, Plaintiff, Appellee.

In testimony whereof, I hereunto set my hand and affix the seal of said United States Circuit Court of Appeals for the First Circuit, at Boston, in said First Circuit, this thirty-first day of August, A. D. 1921.

[Seal of the United States Circuit Court of Appeals, First Circuit.]

ARTHUR I. CHARRON,
Clerk.

Volume III.

United States Circuit Court of Appeals for the First Circuit, October Term, 1920.

No. 1504.

MINNESOTA & ONTARIO PAPER COMPANY, Defendant, Appellant,

v.

EIBEL PROCESS COMPANY, Complainant, Appellee.

Appeal from the District Court of the United States for the District of Maine from Final Decree (Hale, J.), November 24, 1920.

TRANSCRIPT OF RECORD.

Volume III.

EXHIBIT BOOK.

Prepared under Stipulation Dated December 1, 1920.

Certified Copy of Record and all Proceedings in said Cause to and Including August 31, 1921.

OFFICE OF THE CLERK
RECEIVED
SEP 23 1921
SUPREME COURT U.S.

VOLUME III.

UNITED STATES CIRCUIT COURT OF APPEALS FOR THE FIRST CIRCUIT.

OCTOBER TERM, 1920.

No. 1504.

MINNESOTA & ONTARIO PAPER COMPANY,

DEFENDANT, APPELLANT,

v.

EIBEL PROCESS COMPANY,

COMPLAINANT, APPELLEE.

APPEAL FROM THE DISTRICT COURT OF THE UNITED STATES FOR THE DISTRICT OF MAINE, FROM FINAL DECREE (HALE, J.), NOVEMBER 24, 1920.

TRANSCRIPT OF RECORD.

VOLUME III.

EXHIBIT BOOK

PREPARED UNDER STIPULATION

DATED DECEMBER 1, 1920.

ORIGINAL

CERTIFIED COPY

OF

RECORD AND ALL PROCEEDINGS IN SAID CAUSE, TO AND INCLUDING AUGUST 31, 1921.

1010

No. 845,224 PATENTED FEB. 26, 1907.

W. EIBEL.

FOURDRINIER MACHINE.

APPLICATION FILED AUG. 23, 1906.

2

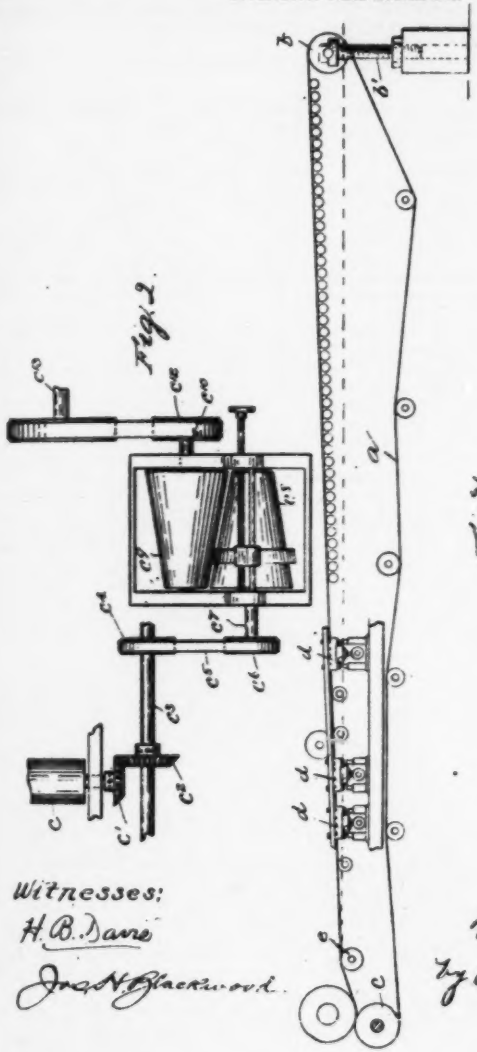

Fig. 2.

Fig. 1.

Witnesses:

H. B. Dare

Jno. N. Blackwood.

Inventor:

William Eibel

by Hayes & Hairman

attys

UNITED STATES PATENT OFFICE. 3

WILLIAM EIBEL, OF RHINELANDER, WISCONSIN, ASSIGNOR, BY DIRECT AND MESNE ASSIGNMENTS, TO EIBEL PROCESS COMPANY, OF PORTLAND, MAINE, A CORPORATION OF MAINE.

FOURDRINIER MACHINE.

No. 845,224. Specification of Letters Patent. Patented Feb. 26, 1907.

Application filed August 22, 1906. Serial No. 331,560.

To all whom it may concern:

Be it known that I, WILLIAM EIBEL, of Rhinelander, county of Oneida, State of Wisconsin, have invented an Improvement in Fourdrinier Machines, of which the following description, in connection with the accompanying drawings, is a specification, like characters on the drawings representing like parts.

This invention relates to Fourdrinier machines, and has for its object to construct and arrange the machine whereby it may be run at a very much higher speed than heretofore and produce a more uniform sheet of paper which is strong, even, and well formed.

My invention is embodied, essentially, in the first part or element of the machine having the Fourdrinier wire or paper-making wire, and consists in causing the stock to travel by gravity in the direction of movement of the making-wire and approximately as fast as the making-wire moves, thereby resulting in a "gravity-feed" for the machine. The stock may be and preferably is caused to travel more rapidly than the normal or usual speed of the making-wire for a certain grade of stock, and means are provided for increasing the speed of the machine so as to cause the making-wire to move at a higher rate of speed than usual, being substantially equal to the speed of the rapidly-moving stock. To accomplish this result in a simple manner, the breast-roll end of the paper-making wire is maintained at a substantial elevation above the level, thereby providing a continuous downwardly-moving paper-making wire, and the declination thus given to the wire is such that the stock is caused to travel by gravity in the direction of the movement of the wire and substantially as fast as the wire moves. The declination of the paper-making wire may be adjustable or the speed of the wire may be variable, or both the declination and speed of the wire may be adjustable, in order that the velocity produced by gravity in the stock on the declining wire will approximately equal the speed of the wire. By this arrangement the speed of the machine may be increased to such an extent as to bring the speed of the making-wire up to the maximum velocity of the rapidly-moving stock and a strong, even, and well-formed sheet produced which is more uniform than usual.

Figure 1 shows in side elevation a sufficient portion of a Fourdrinier machine to illustrate my invention. Fig. 2 is a plan view of a detail of the machine, showing the means for adjusting the speed of the making-wire.

a represents the usual Fourdrinier wire or paper-making wire; *b*, the breast-roll; *c*, the lower couch-roll; *d*, the suction-boxes, and *e* the wire-guide roll.

The lower couch-roll serves as the driving-roll for the making-wire, and, as herein shown, it has secured to it a bevel-pinion c', which is engaged by a bevel-gear c^2, secured to a shaft c^3, bearing a belt-pulley c^4, over which a belt c^5 passes, which passes over a belt-pulley c^6, secured to a shaft c^7, bearing a cone-pulley c^8, which is engaged by a cone-pulley c^9, secured to a shaft c^{10}, bearing a belt-pulley c^{11}, which is connected by a belt with the driving-shaft c^{12}. The means herein shown for driving the making-wire provide for adjusting its speed; but in lieu thereof any other suitable means may be employed.

The Fourdrinier wire has usually been arranged to move in a horizontal plane, although I am aware that means have been provided for adjusting the breast-roll end of the wire to different elevations, usually below the level, to provide for running with different grades of stock—as, for instance, with quick stock and slow stock; but so far as I am aware the making-wire has always had to perform the work of drawing along the stock, and as the wire moved much faster than the stock the stock waved or rippled badly near the breast-roll end of the wire, which gradually diminished until an equilibrium was established and a smooth, even, and glassy surface presented, and not until the waving or rippling ceased did the fibers lay down uniformly and produce a well-formed sheet of paper. The machine has been run necessarily at a slow rate of speed to give ample time for the water to escape and for the fibers to lay down so as to make a uniform sheet, and in case the time was insufficient the

1013

breast-roll end of the wire has been lowered still farther until the desired result was accomplished. In accordance with my invention I operate entirely above the level to cause the stock to travel by gravity at a velocity approximately equal to the speed of the making-wire, which I believe to be a new principle of operation.

The breast-roll end of the making-wire *a* is maintained at a substantial elevation above the level, so that the wire declines. The declination of the wire is sufficient to enable the stock by gravity to move at a rapid rate of speed, which speed is substantially equal to the speed of the making-wire, so that the waves or ripples are eliminated. The making-wire may decline continuously from end to end or from the breast-roll to the guide-roll or from the breast-roll to the suction-boxes; but in practice I prefer to decline the making-wire from the breast-roll to the guide-roll, and in such event the frame which supports the suction-boxes will be adjusted to correspond to the declination of the making-wire to thereby support the suction-boxes at different elevations corresponding to the declination of the wire.

The elevation above the level at which the breast-roll end of the making-wire is maintained will vary according to the grade of stock; but in any event it will be substantial, so as to cause the stock to move rapidly by gravity.

For the purpose of adjusting the breast-roll end of the making-wire the bearings of the breast-roll may be adjusted by means of a screw *b'*, or any other suitable means may be employed for this purpose.

For the purpose of increasing the speed of the machine to the maximum I maintain the breast-roll end of the making-wire at a high elevation above the level, so that the stock travels by gravity much faster than the making-wire ordinarily runs for a certain grade of stock, and I then increase the speed of the machine to such extent as to bring the rate of speed of the making-wire up to the speed of the rapidly-moving stock, and as a result the capacity of the machine is largely increased.

I find in practice that by providing a gravity-feed operating substantially as herein described the stock runs smoothly and evenly without waving or rippling, and the fibers are thereby permitted to settle with great uniformity as regards their distribution over the wire, so that the paper in addition to being well formed is very uniform. Furthermore, as the stock is moving with the paper-making wire instead of being moved by the wire, or essentially by the wire, the formation of the paper will begin at the start and will continue to the end of the travel of the stock with the wire. Furthermore, by making the sheet of paper uniform over all less sulfite or strengthening material is required. Furthermore, as the stock carries less water when arriving at the suction-boxes the amount of suction ordinarily required may be reduced, thereby reducing the friction due to the making-wire passing over the suction-boxes, and hence increasing the life of the wire.

Having thus described my invention, what I claim as new, and desire to secure by Letters Patent, is—

1. A Fourdrinier machine having the breast-roll end of the paper-making wire maintained at a substantial elevation above the level, whereby the stock is caused to travel by gravity, rapidly, in the direction of movement of the wire, and at a speed approximately equal to the speed of the wire, substantially as described.

2. A Fourdrinier machine having the breast-roll end of the paper-making wire maintained at a high elevation, whereby the stock is caused to travel by gravity faster than the normal speed of the wire for a certain grade of stock, and having means for increasing the speed of the machine to cause the wire to travel at substantially the same rate of speed as the rapidly-moving stock, substantially as described.

3. A Fourdrinier machine having the paper-making wire declined from the breast-roll to the guide-roll, the breast-roll end of the wire being maintained at a substantial elevation above the level, whereby the stock is caused to travel by gravity, rapidly, in the direction of movement of the wire and at a speed approximately equal to the speed of the wire, substantially as described.

4. In a Fourdrinier machine, a continuously-downward-moving paper-making wire, and means for adjusting the speed of the wire so that the wire will move at a speed approximately equal to the velocity of the stock produced by gravity, substantially as described.

5. In a Fourdrinier machine, a continuously-downward-moving, adjustably-declined paper-making wire, the declination and speed of the wire being adjustable, so that the velocity produced by gravity in the stock on the declining wire is approximately equal to the speed of the wire, substantially as described.

6. In a Fourdrinier machine, a paper-making wire moving continuously downward from the breast-roll to the guide-roll, whereby the stock is caused to travel by gravity in the direction of movement of the wire, and means for adjusting the speed of the wire so that the velocity produced in the stock by gravity on the declining wire is approximately equal to the speed of the wire, substantially as described.

7. A Fourdrinier machine having the paper-making wire declined from the breast-roll to the guide-roll, and the suction-boxes supported at a corresponding declination, substantially as described.

8. A Fourdrinier machine having the paper-making wire declined from the breast-roll to the guide-roll, and the several suction-boxes arranged at different elevations, substantially as described.

9. In a Fourdrinier machine, a paper-making wire having its breast-roll end maintained at a substantial elevation above the level whereby the stock is caused to travel by gravity in the direction of movement of the wire, means for adjusting the breast-roll end of said wire to different elevations above the level, and means for adjusting the speed of the wire to approximately equal the velocity of the stock produced by gravity, substantially as described.

10. In a Fourdrinier machine, a paper-making wire declining from the breast-roll to the guide-roll whereby the stock is caused to travel by gravity in the direction of movement of the wire, means for adjusting the breast-roll end of said wire to different elevations above the level, and means for adjusting the speed of the wire to approximately equal the velocity of the stock produced by gravity, substantially as described.

11. In a Fourdrinier machine, a paper-making wire having its breast-roll end maintained at a substantial elevation above the level whereby the stock is caused to travel by gravity in the direction of movement of the wire, and means for adjusting the breast-roll end of said wire to different elevations above the level whereby the velocity of the stock produced by gravity approximately equals the speed of the wire, substantially as described.

12. In a Fourdrinier machine, a downwardly-moving paper-making wire, the declination and speed of which are so regulated that the velocity of the stock down the declining wire, caused by gravity, is so related to the velocity of the wire in the same direction, that waves and ripples on the stock are substantially avoided and the fibers deposited with substantial uniformity on the wire, substantially as described.

In testimony whereof I have signed my name to this specification in the presence of two subscribing witnesses.

WILLIAM EIBEL.

Witnesses:
B. J. NOYES,
CYNTHIA DOYLE.

1015

No. 634,228. Patented Oct. 3, 1899.

C. E. BARRETT & J. H. HORNE. 8

PAPER MAKING MACHINE.

(No Model.) (Application filed Apr. 19, 1899.) 2 Sheets—Sheet 1.

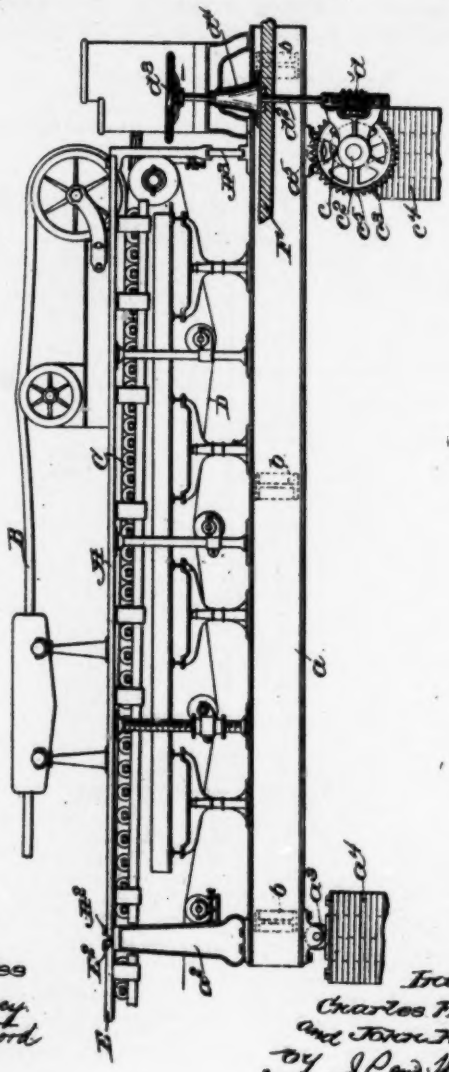

Fig. 1.

Witnesses
Jas. F. Maloney.
Nancy P. Ford.

Inventors,
Charles F. Barrett
and John H. Horne
by J. P. and Y. Lawrence
Att'ys.

1016

No. 634,228. Patented Oct. 3, 1899.

C. E. BARRETT & J. H. HORNE.

PAPER MAKING MACHINE.

(Application filed Apr. 10, 1899.)

(No Model.) 2 Sheets—Sheet 2.

10

Fig. 2.

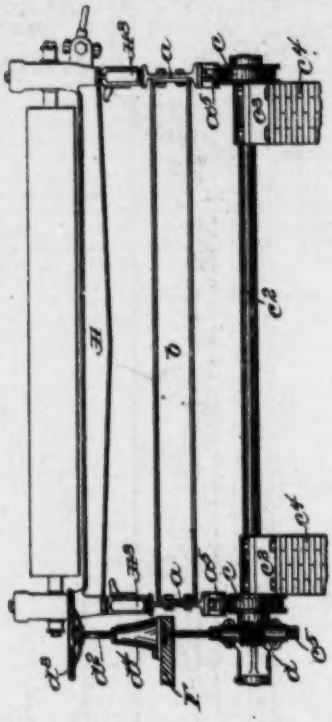

Witnesses
Jas. J. Maloney.
Nancy P. Ford

Inventors;
Charles E. Barrett
and John H. Horne.
by J. P. and M. J. Sweeney
Attys

UNITED STATES PATENT OFFICE.

CHARLES E. BARRETT AND JOHN H. HORNE, OF LAWRENCE, MASSACHUSETTS, ASSIGNORS TO THE J. H. HORNE & SONS COMPANY, OF SAME PLACE.

PAPER-MAKING MACHINE.

SPECIFICATION forming part of Letters Patent No. 634,228, dated October 3, 1899.

Application filed April 19, 1899. Serial No. 713,567. (No model.)

To all whom it may concern:

Be it known that we, CHARLES E. BARRETT and JOHN H. HORNE, of Lawrence, county of Essex, and State of Massachusetts, have invented an Improvement in Paper-Making Machines, of which the following description, in connection with the accompanying drawings, is a specification, like letters on the drawings representing like parts.

The present invention relates to a Fourdrinier paper-machine and is embodied in that part of the machine known as the "shake-frame," at which part the pulp is first supplied to the wire support and "laid" by a lateral vibration thereof.

In certain kinds of pulp, notably the wood-pulp which is now largely used in making paper, the water drains away very rapidly, so that the pulp may become nearly dry before it leaves the shake-frame, and thus not be properly laid when it reaches the rollers. This tendency may be obviated to a considerable extent by downwardly inclining the shake-frame toward the rollers, so that the water tends to travel along with the pulp and will not, therefore, drain out through the wire so rapidly. It is further desirable that the amount of inclination or slope should be variable, so as to adapt the machine for pulp of different kinds or grades.

It is the object of this invention to accomplish these purposes, and in accordance therewith the shake-frame is mounted on a movable support or frame, the end of which where the pulp is received being arranged to be raised or lowered, so that the said shake-frame can be inclined at any angle to the permanent rails, or, if desired, retained level. The ends of the shake-rails where they adjoin the stationary support are so arranged that they are not raised or lowered in the adjustment of this part of the machine, the adjusting movement having this point as an axis. As herein shown, the stationary rails and the shake-rails are both supported adjacent to each other upon an upright at the end of the adjustable staging, the stationary rails being so arranged that said upright is capable of a slight pivotal movement with relation to said rails, so that as the staging is raised the stationary rails will not be strained and will always remain at the same level with the pivoted ends of the shake-rails.

Figure 1 is a side elevation of a portion of a Fourdrinier paper-machine, showing the shake-rails and sufficient of the stationary rails to illustrate the relation between said parts; and Fig. 2 is an end elevation of the same, the floor or main supporting portion of the room in which the machine is placed being shown in section in both figures.

That portion of the machine which comprises the shake-rails A, the deckle-strap B, the table-rolls C, and the wire D, all of which parts are of usual construction, is mounted, in accordance with the present invention, upon a movable frame or support, herein shown as comprising longitudinal beams *a* and transverse beams *b*, the former constituting the main support for the machine elements above named. The said frame is shown as provided at one end with vertical members or supports a^2, to which the shake-rails A are pivoted at A^1, the said shake-rails being supported at the opposite end upon rolling supports A^2, substantially as shown and described in Patent No. 595,753, granted December 22, 1897, to Charles E. Barrett. In this instance, however, the said rolling supports instead of resting on the floor rest upon the beams *a* of the movable frame or support for this part of the machine. Since the shake-frame carries the breast-roll, the table-rolls, &c., it is obvious that the inclination or slope of this part of the machine, including the wire, will be varied by raising or lowering the end of the frame or support *a b*. Since the wire extends directly from this part of the machine to the part where the stationary rails E are supported, it is essential that the end of the shake-rails should be adjacent to the ends of the permanent rails, and, as herein shown, the permanent rails rest upon the uprights a^3, being loosely connected therewith and beveled at E^3, so that the said post can be rocked with relation to said fixed rails without straining the same. This part therefore constitutes the axis upon which the whole frame is moved when the opposite end thereof is lifted or lowered, and to accommodate such move-

1018

ment the frame is shown as provided with wheels or other antifriction devices a^3, resting upon a pillar or support a^4, which is preferably below the floor of the room in which the machine is placed, in order that the upper portion of the frame a may be substantially on a level with the said floor. When, therefore, the farther end of the frame is lifted or lowered, the wheel a^3 will travel along the surface of the post a^4, the shake-rails and the permanent rails remaining in the same position with relation to each other.

The end of the frame a may be raised or lowered by any suitable means, it being desirable, however, to arrange a compensating gear, since the frame is exceedingly heavy, while the distance through which it is to be moved is relatively small. As herein shown, the said frame is supported upon cams c, the beams a being provided with wheels a^3 or other suitable antifriction devices resting on the said cams, one of which is below each side beam. These cams are shown as secured upon a shaft c^2, provided with bearings c^3, supported upon pillars c^4, corresponding to the pillars a^4 and preferably below the surface of the floor F. To operate the cams, the shaft c^2 is shown as provided with a gear-wheel c^5, coöperating with a worm d, which is shown as mounted on a vertical shaft d^2, provided with an actuating-wheel d^3. The said shaft is mounted in a suitable bearing d^4 upon the floor F, so that the wheel d^3 will be in a convenient position to be actuated by the attendant. To raise the end of the frame $a\ b$, therefore, in order to produce the desired inclination or slant of the wire part, it is only necessary to turn the wheel d^3, and thus cause the rotation of the shaft c^2, so that the cams turn, thereby gradually lifting the entire frame at this end until it has reached the desired position. The nature of the gearing is such that no locking devices are necessary, it being obvious that the frame will be supported in any desired position until changed by turning the wheel d^3.

We claim—

1. A movable staging or support for the shake-frame of the paper-machine; and means for changing the vertical position of the breast-roll end of said support without changing the vertical position of the opposite end thereof, to thereby vary the inclination of the wire upon the shake-frame, as set forth.

2. A movable staging or support for the shake-frame of a paper-machine, said staging being independent of the support for the remainder of the machine, one portion of said staging also constituting a support for the stationary rails; and means for vertically adjusting the position of the breast-roll end of said staging without varying the vertical position of that part which constitutes the support for the stationary rails, as set forth.

3. A movable staging or support for the shake-frame of a paper-machine, said staging being provided at one end with vertical members to which the shake-rails are pivoted, (said vertical members also constituting supports for the stationary rails) and at the other end with a vertical support for the breast-roll; rolling-supports for said staging below the vertical members at the stationary rail end of the staging; and vertically-adjustable members to support said staging near the breast-roll end thereof, as set forth.

4. A movable staging or support for the shake-frame of a paper-machine; one or more cams upon which said staging rests at the breast-roll end; and means for rotating the said cams to vary the vertical position of said breast-roll end of the staging, the other end being arranged to maintain the same vertical position, as set forth.

5. A movable staging or support for the shake-frame of a paper-machine, one or more cams upon which the breast-roll end of the said staging rests, a gear-wheel connected with said cams and adapted to rotate the same, and a worm coöperating with said gear to vary the vertical position of the breast-roll end only of said staging, substantially as and for the purpose described.

6. A movable staging or support for the shake-frame of a paper-machine, the breast-roll end of which said staging is adapted to be raised or lowered to vary the angle of the wire support along the shake-frame to the said wire support beyond the said shake-frame, substantially as described.

In testimony whereof we have signed our names to this specification in the presence of two subscribing witnesses.

CHARLES E. BARRETT.
JOHN H. HORNE.

Witnesses:
JOHN E. HORNE,
JOHN W. BOLTON.

1019

No. 675,072. Patented May 28, 1901.

T. H. SAVERY.

SHAKING SECTION FOR PAPER MAKING MACHINES. 14

(Application filed Jan. 31, 1901.)

(No Model.) 2 Sheets—Sheet 1.

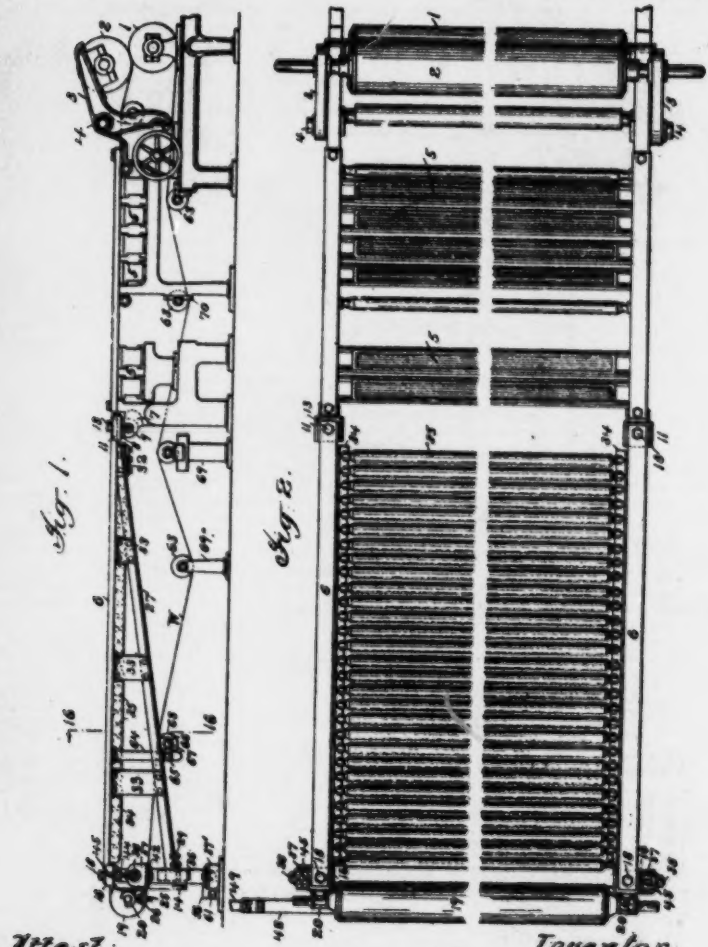

Attest:
T. F. Kehoe
A. H. Bonney

Inventor.
Thomas H. Savery
by Philipp, Sawyer, Rice & Kennedy
Attys

1020

No. 675,072. Patented May 28, 1901.

T. H. SAVERY.

SHAKING SECTION FOR PAPER MAKING MACHINES.

(No Model.) (Application filed Jan. 31, 1901.) 16

2 Sheets—Sheet 2.

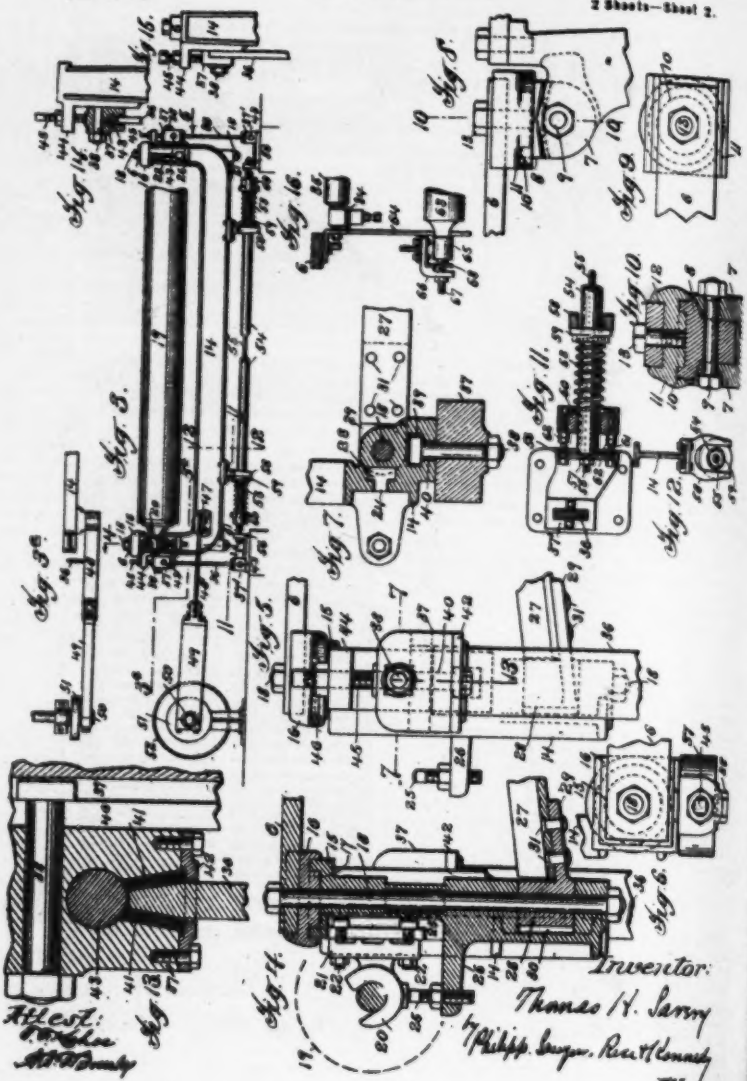

Attest:
[illegible]
[illegible]

Inventor:
Thomas H. Savery
by Philipp, Sawyer, Rice & Connely
Attys

UNITED STATES PATENT OFFICE.

THOMAS H. SAVERY, OF WILMINGTON, DELAWARE.

SHAKING-SECTION FOR PAPER-MAKING MACHINES.

SPECIFICATION forming part of Letters Patent No. 675,078, dated May 28, 1901.

Application filed January 31, 1901. Serial No. 45,436. (No model.)

To all whom it may concern:

Be it known that I, THOMAS H. SAVERY, a citizen of the United States, residing at Wilmington, county of Newcastle, and State of Delaware, have invented certain new and useful Improvements in Shaking-Sections for Paper-Making Machines, fully described and represented in the following specification and the accompanying drawings, forming a part of the same.

This invention relates to certain improvements in Fourdrinier paper-making machines, and more particularly to the shaking-sections which are used in connection therewith. The shaking-section of Fourdrinier paper-making machines as ordinarily constructed consists of a frame, said frame being pivoted to the machine-frame at one end and including two longitudinal side rails. The table-rolls over which the wire-cloth runs are mounted in suitable bearings carried by the side rails, and the breast-roll is supported on that part of the frame which connects the free ends of the rails. This shaking-section is vibrated laterally at a high rate of speed, usually about two hundred and fifty times a minute. The amplitude of vibration of the breast-roll, which is carried at one end of the shaking-section, is usually about a quarter of an inch. Since the side rails are of great length and necessarily more or less elastic and the impulses are imparted to the shaking-section at the breast-roll end, it has been found that a sinuous or compound movement of the rails is liable to occur near the pivoted end of the section, the result of which is that the shaking-section is not given a simple homogeneous movement throughout its entire length. Furthermore, unless the shaking-section is heavily braced there is liability that the strain imparted to the breast-roll by the wire-cloth which runs over it will spring the same backward, which is of course objectionable.

In one of the best constructions of shaking-sections the frame which connects the ends of the rails is supported on one side by a link which is pivoted to the frame and to a suitable support, and on the other side by a bell-crank lever which is pivoted to the frame and to a suitable support, the vibrations being imparted to the shaking-section by a cam operating on the end of the bell-crank lever. While this construction is satisfactory in many respects, it is open to the objection that the pivots or bearings which are necessarily employed are exposed to the action of the water used in paper-making processes, and they corrode and wear.

Constructions have been proposed in which the breast-roll end of the shaking-section frame is suspended on pendulous springs, which are connected at their upper ends to a standard and at their lower ends to the side pieces of the frame which connects the ends of the rails of the shaking-section, the vibration of the section being effected by means of an eccentric-rod, which is pivoted to one of the side pieces of the frame. While this construction does away with part of the pivotal connections before referred to, it is objectionable because the surface of the frame moves in a concave line, and, furthermore, because it is difficult to so adjust the pendulous springs as to properly obtain and control the vibration. It is desirable, furthermore, to provide for a vertical adjustment of the breast-roll end of the shaking-section, so that this section may lie in a horizontal plane or above or below such plane, according to the stock which is being handled and the character of the product desired. Some manufacturers desire to have the shaking-section in one position with relation to a horizontal plane and some another.

It is one of the objects of this invention to produce a shaking-section the frame of which shall be exceedingly stiff and rigid, so as to avoid any compound movement of the shaking-section due to the elasticity of the rails and to further avoid the tendency of the breast-roll to be dragged or pulled backward by the wire-cloth which runs over it.

A further object of the invention is to produce a simple, cheap, and efficient construction of shaking-section for paper-making machines which shall be free from objectionable pivotal joints or bearings.

A further object of the invention is to produce an improved construction of shaking-section in which the section shall be capable of a vertical adjustment with respect to the frame of the machine.

With these and other objects in view the invention consists in certain constructions

1022.

and in certain parts, improvements, and combinations, as will be hereinafter fully described and then specifically pointed out in the claims hereunto appended.

In the accompanying drawings, which form a part of this specification, and in which like characters of reference indicate the same parts, Figure 1 is a side view of a Fourdrinier paper-making machine provided with the improved construction of shaking-section. Fig. 2 is a plan view of the construction shown in Fig. 1. Fig. 3 is an end view of the construction shown in Fig. 1, one end of the breast-roll being broken away. Fig. 3ª is a detail plan view of the mechanism employed for shaking the section. Fig. 4 is a sectional view, on an enlarged scale, on the line 4 4 of Fig. 3. Fig. 5 is a detail side elevation, on an enlarged scale, of the top of one side of a U-shaped frame looking in the direction of the arrow 5 in Fig. 3. Fig. 6 is a plan view of the construction shown in Fig. 5. Fig. 7 is a sectional plan view on the line 7 7 of Fig. 5. Fig. 8 is a detail view of the connection between the shaking-section rails and the frame proper of a Fourdrinier machine. Fig. 9 is a plan view of the construction shown in Fig. 8. Fig. 10 is a vertical section on the line 10 10 of Fig. 8. Fig. 11 is a detail plan view on the line 11 11 of Fig. 3. Fig. 12 is a section on the line 12 12 of Fig. 3. Fig. 13 is a detail sectional view, on an enlarged scale, illustrating one form of the connection between the spring supporting-bar and the shaking-section frame. Figs. 14 and 15 are modifications of the construction shown in Fig. 13; and Fig. 16 is a detail sectional view on the line 16 16 of Fig. 1, illustrating the construction by which one of the rolls which support the under run of the making-wire is mounted.

Referring to the drawings, which illustrate a preferred embodiment of the invention, 1 indicates the lower couch-roll of a Fourdrinier paper-making machine of ordinary construction. The upper couch-roll 2 is carried in bent arms 3, pivoted to the frame of the machine at 4, this construction being an ordinary well-known form. Ordinary suction-boxes are indicated at 5.

The shaking-section of the machine includes a pair of longitudinal side rails 6, the inner ends of which may be supported in any suitable manner. In the construction shown (see Fig. 8) the machine-frame is provided on each side with a pair of ears 7, and between each pair of ears is pivoted a support, which in the preferred form of the construction consists of a block 8, the upper face of which is formed as a plate, the connection being formed by means of a bolt 9, which passes through the ears and the block or in any other suitable manner. This construction permits the shaking-section rails, which are connected to the supports in the manner to be hereinafter described, to have a vertical adjustment, the supports during such adjustment turning on the bolts 9 as pivots.

In order to provide for the lateral movement of the rails 6 produced by the vibrating means hereinafter described, the rails are preferably pivotally connected to the supports. The construction by which the rails are pivotally connected to the supports may be varied within wide limits. As shown, however, each block 8 is provided with an upwardly-extending annular projection 10, which engages a similarly-formed recess in a cap-piece 11, the lower face of which forms a plate. This cap-piece (see Fig. 10) is preferably formed with a socket 12, and the ends of the rails 6 extend into these sockets and fit snugly therein, the rails being held in position in the sockets by means of bolts 13 or in any other suitable manner.

By the construction which has just been described it will be seen that each of the rails is so supported as to be capacitated to receive a vertical movement and a horizontal movement. This connection, therefore, provides for the shaking movement of the side rails and also for a vertical adjustment of the outer end of the same, as will be hereinafter described.

The outer ends of the side rails 6 are connected by a frame which preferably consists of a U-shaped casting 14, similar to that shown and described in Patent No. 635,511, granted to me October 24, 1899. The connection between the ends of the rails and the ends of the casting may be effected in any suitable manner. In the construction shown, however, the upper ends of the U-shaped frame are formed with sockets 15, in which are mounted cap-pieces 16, having downwardly-extending projections 17, which engage the sockets. These cap-pieces 16 are formed with sockets, into which the forward ends of the side rails 6 extend, the sockets being so constructed that the rails fit snugly therein. The parts of the structure may be tied together in any suitable manner. Preferably, however, long bolts 18 are employed, which extend through the rails, the sockets, and the upwardly-extending legs of the U-shaped frame.

The U-shaped frame 14 is provided with suitable bearings for the breast-roll 19. In the construction shown (see Figs. 4 and 7) these bearings are formed by brackets 20, which extend from plates 21, secured to the U-shaped frame by bolts 22. In the preferred form of the construction the heads of these bolts are contained in recesses 23, the stems of the bolts extending through slots 24, which communicate with the recesses. The brackets 20 rest upon adjusting-screws 25, which are tapped through ledges 26, cast on the upwardly-extending legs of the U-shaped frame. While the construction which has just been described is a very effective one for the purpose and forms a means by which the position of the breast-roll can be readily adjusted, it is to be understood that any other suitable form of bearing may be substituted for it.

In order to stiffen the shaking-section,

1023
19 8

suitable struts 27 are employed, (see Fig. 1,) said struts being connected at one end to the U-shaped frame and at the other end to the rails 6. The connection between the struts and the U-shaped frame 14 may be effected in any suitable manner. As shown, (see Figs. 4 and 7,) sleeves 28 are provided, said sleeves having formed in one piece therewith flanges 29. These sleeves 28 are located in recesses 30 in the legs of the U-shaped frame and are held in position by the long bolts 18, which pass through perforations in the sleeves. The struts 27 are connected to the flanges 29 by means of rivets 31 or in any other suitable manner. The opposite ends of the struts are bolted to the under side of the side rails, filling-blocks 32 being preferably interposed to form a good bearing therefor. To further stiffen the structure, intermediate braces 33 are preferably employed. Any suitable number of these braces may be used; but three are shown. It is to be noted that these braces do not serve to support the side rails, as these rails are supported at one end by the machine-frame and at the other end by the U-shaped frame, the rails and the U-shaped frame being tied together by the struts. The function of these intermediate braces is, as before stated, simply to stiffen the structure.

Each of the side rails 6 (see Fig. 16) is provided with a bracket 34, these brackets serving to support the bearings in which the table-rolls 35 are mounted. The particular manner of mounting these table-rolls is fully set forth in my Patent No. 635,511, above referred to, and inasmuch as this construction has no particular relation to the present invention a fuller description of it is unnecessary.

While the shaking-section so far described may be supported at the breast-roll end in any suitable or desired manner, it will preferably be mounted on spring supporting-bars 36. The connection between the bars and the U-shaped frame may be effected in any suitable manner. Preferably, however, each of the upwardly-extending legs of the U-shaped frame is provided with a bearing-block 37. These blocks are secured to the legs in any suitable manner; but they will preferably be adjustably secured by means of bolts 38, which pass through the blocks. The heads of these bolts are located in recesses 39, formed in the legs, communication being had with these recesses by means of slots 40. The upper ends of the bars 36 are preferably made wedge-shaped, as clearly shown in Fig. 13, and extend into similarly-formed openings or cavities in the blocks 37. The blocks are preferably bored at right angles to the openings which receive the ends of the bars, and hardened turned pins 43 are inserted into the bores, the ends of the bars bearing against the pins.

The openings or cavities which receive the ends of the bars 36 are preferably tapered and are made larger than the bars. A plurality of thin metallic plates 41 are packed in said openings on each side of the bars. These plates are arranged so that they fit tightly together at their inner ends, thus holding the bars snugly in position. At their outer ends, however, the plates are slightly loose, so as to permit the proper movement of the bars. These plates when used may be held in position in any suitable manner. As shown, the inner plates of the series are provided with flanges which overlap the remainder of the plates, and a perforated cap 42 is employed to hold the plates in position, said cap being secured to the block 37 by means of screws or in any other suitable manner.

While the construction which has just been described is the preferred form, any other suitable construction may be substituted therefor. In Fig. 14 there is illustrated a modification. In this modification the tapered openings are not employed and the plates 41 are omitted. In this case, therefore, the bars 36 rest directly on the turned pins 43. In Fig. 15 I have illustrated another modification of this part of the construction. In this form the turned pins 43 are omitted and the blocks 37 are of a slightly-different shape. Furthermore, the bolts 38 in this case pass directly through the upper ends of the bars.

The lower ends of the bars 36 may be supported in any suitable manner. Preferably, however, as indicated in Fig. 3, they will be supported by blocks 37', which are the same in all respects as the blocks 37, before described, and of which, therefore, a detailed description is unnecessary.

Means are preferably employed to vertically adjust the shaking-section so as to bring the making-wire W into different positions with respect to a horizontal plane, according to the character of the stock employed. While any suitable means may be used to effect this adjustment, as shown, the upper ends of the legs of the U-shaped frame are provided with ears 44, through which are tapped screws 45, these screws bearing at their lower ends on the tops of the blocks 37. Suitable locking-nuts 46 may be employed, if desired. It will be noted that the screws 45 form a very efficient, speedy, and accurate means of obtaining the desired adjustment, especially when used in connection with the means heretofore described for pivotally supporting the other end of the shaking-section rails.

Any suitable means may be employed for vibrating the shaking-section. In the construction shown, however, the U-shaped frame is provided with a lug or extension 47, and to this extension is bolted a spring-bar 48. The other end of this bar 48 is suitably connected to a bar 49, which is made of wood. This bar 49 is connected to a crank-pin 50, carried on a crank-disk 51, mounted on a shaft which is rotated by a suitable pulley 52 or in any other suitable manner. By the use of this construction a pivotal connection between the bar and the shaking-section is

rendered unnecessary, as the bar 48 will spring sufficiently to permit the movement of the crank-pin, which rotates in a circle having a comparatively small radius.

By mounting the shaking-section on spring-bars in the manner described a better shaking action is obtained than is the case where the shaking-section is suspended from spring-bars. In the latter case the shaking-section moves in a concave line. The shaking-section is consequently moving upward when its movement is checked at each end of its reciprocation. The inertia of the paper stuff causes it, therefore, to tend to continue its upward movement after the movement of the shaking-section and wire is stopped—that is to say, this inertia tends to cause the paper stuff to leave the wire. Furthermore, the tendency of the water contained in the stuff is to move in the same direction as the stuff, and therefore to remain in it. By mounting the shaking-section, however, on spring supporting-bars the movement of the wire is in a convex line. The wire is consequently moving downward when its movement is checked at each end of its reciprocation, and the inertia of the paper stuff causes it to move toward the wire at this time. The inertia of the stuff tends, therefore, to cause it to continue its downward movement after the movement of the shaking-section has been checked, and consequently causes the stuff to hug the wire. The water which is contained in the stuff tends, therefore, to move downward and out of the stuff through the wire.

While the spring-supports and the vibrating mechanism before referred to may be alone relied upon to effect a shaking movement of the section, additional springs are preferably employed to assist in this action. While the construction by which the additional springs are utilized may be varied widely, as shown, (see Fig. 3,) two such springs 53 are employed. These springs may be supported in any suitable manner; but in the construction shown a long sleeve 54 is provided, supported on a rod 55, extending across beneath the shaking-section, said rod finding its bearing at each end in brackets 56, to which brackets it is secured by means of nuts 57. Suitable bearings are provided by which the force of the springs is made effective on the shaking-section. The position of these bearings will of course depend upon the location of the springs 53. In the construction shown, which is the preferred form, these bearings will consist of forks 58, which are secured to the under side of the horizontal part of the U-shaped frame, collars 59 being interposed between the bearings and the ends of the springs. The other ends of the springs rest against collars 60, which may be made adjustable in order to vary the tension of the springs. While any suitable device may be employed for adjusting these collars, in the preferred form of the construction each collar is supported by two screws 61, which are preferably secured, by means of nuts or in any other suitable manner, to the brackets 56. These screws 61 extend into perforations in the collars 60, the position of the collars being determined by lock-nuts 62. This construction forms a simple and ready means of adjustment and has the advantage that the adjustment may be varied without stopping the operation of the machine.

While in the preferred construction the frame is mounted on supporting-bars, such as have been described, and additional springs will be used to assist in the movement of the shaking-section and steady its movement, it will be understood that the additional springs alone might be depended on, in connection with the vibrating means, to give the shaking-section its movement.

The wire W after leaving the breast-roll 19 is led back over supporting-rolls 63, part of which are preferably mounted so as to partake of the movement of the shaking-section. One of these rolls is shown as mounted in this manner. While the construction by which the roll which moves with the shaking-section is supported may be varied, as shown, hangers 64 are arranged to depend from the under side of the rails 6. These hangers carry bearings 65 for the roll, said bearings being adjustable on the hangers. In order to prevent any sidewise movement of the roll 63 in its bearings, the under side of the struts 27 are provided with downwardly-depending supports 66, through which are tapped stop-screws 67. Wear-plates 68 are or may be interposed between the ends of the screws and the journals of the bearings 65. With this construction it will be seen that the roll 63 is supported entirely by the top rails of the shaking-section and that this roll must partake of the action of the section. The rest of the rolls 63 are supported in any suitable manner, as by uprights 69 and bearings 70.

While the construction which has been described embodies the preferred form of the invention, it is to be understood that the invention is not to be limited to the specific details thereof.

What is claimed is—

1. In a shaking-section for paper-making machines, the combination with the side rails carrying the table-rolls, of a frame to which said rails are connected, a breast-roll mounted on the frame, and struts extending from the frame to the rails, substantially as described.

2. In a shaking-section for paper-making machines, the combination with the side rails carrying the table-rolls, of a U-shaped frame to the ends of which the rails are connected, a breast-roll mounted on the frame, and struts extending from the frame to the side rails, substantially as described.

3. The combination with a pair of shaking-section rails, of means for pivotally supporting one end of each of said rails, table-rolls mounted on the shaking-section, a frame to

which the other ends of the shaking-section rails are connected, means for supporting said frame, a breast-roll mounted on said frame, struts connecting said frame and the rails, braces between the rails and the struts, and means for vibrating the shaking-section, substantially as described.

4. The combination with a pair of shaking-section rails, of means for pivotally supporting one end of each of said rails, table-rolls mounted on the shaking-section, a frame to which the other ends of the shaking-section rails are connected, means for supporting said frame, a breast-roll mounted on said frame, struts connecting said frame and the rails, braces between the rails and the struts, wire-supporting rolls, part of which are carried by the rails, and means for vibrating the shaking-section, substantially as described.

5. In a paper-making machine, the combination with a pair of shaking-section rails, of means for pivotally supporting one end of each of the rails, table-rolls carried by the rails, a frame to which the other end of each rail is connected, a breast-roll mounted on said frame, spring supporting-bars, connections between said frame and the upper ends of the bars, means for supporting the lower ends of the bars, and means for vibrating said shaking-section, substantially as described.

6. In a paper-making machine, the combination with a pair of shaking-section rails, of means for pivotally supporting one end of each of the rails, table-rolls carried by the rails, a frame to which the other end of each rail is connected, a breast-roll mounted on said frame, spring supporting-bars, adjustable connections between said frame and the upper ends of the bars, means for supporting the lower ends of the bars, and means for vibrating the shaking-section, substantially as described.

7. In a paper-making machine, the combination with a pair of shaking-section rails, of means for pivotally supporting one end of each rail, table-rolls carried by said rails, a U-shaped frame to which the other end of each rail is connected, a breast-roll mounted on said frame, struts between said frame and the rails, braces between the struts and the rails, spring supporting-bars, adjustable connections between said frame and the upper ends of the bars, means for supporting the lower ends of the bars, and means for vibrating the shaking-section, substantially as described.

8. In a paper-making machine, the combination with a shaking-section, of pivotally-mounted plates supporting the inner ends of said section, pivotal connections between the plates whereby the section is permitted to move in two directions, means for supporting the outer end of the shaking-section, means for giving the outer end of the shaking-section a vertical adjustment with respect to its support, and means for vibrating the section, substantially as described.

9. In a paper-making machine, the combination with a pair of shaking-section rails, pivotally-mounted plates for supporting the inner end of each of said rails, pivotal connections between the plates whereby the rails are permitted to move vertically and horizontally, table-rolls mounted on the rails, a frame to which the other end of each rail is connected, a breast-roll mounted on said frame, supports for said frame, means for giving the frame a vertical adjustment with respect to its support, and vibrating means, substantially as described.

10. In a paper-making machine, the combination with a pair of shaking-section rails, of means for pivotally supporting the inner end of each of said rails so as to permit the rails to move vertically and horizontally, table-rolls supported on the rails, a U-shaped frame to which the other end of each rail is connected, a breast-roll mounted on this frame, spring supporting-bars to the upper ends of which the frame is connected, means for supporting the lower ends of the bars, means for giving the U-shaped frame a vertical adjustment with respect to the supporting-bars, struts connecting said frame with the rails, braces between the struts and the rails, and vibrating means, substantially as described.

11. In a paper-making machine, the combination with a pair of shaking-section rails, of means for pivotally supporting the inner end of each of said rails, table-rolls mounted on the rails, a frame to which the outer end of each rail is connected, a breast-roll mounted on said frame, struts connecting said frame and the rails, braces between the rails and the struts, spring supporting-bars, connections between the upper ends of said bars and the frame, means for supporting the lower ends of the bars, a spring-bar connected to the frame, and means for operating the bar to vibrate the frame, substantially as described.

12. In a paper-making machine, the combination with a pair of shaking-section rails, of means for pivotally supporting the inner end of each of said rails so as to permit them to move vertically and horizontally, table-rolls mounted on the rails, a U-shaped frame to which the outer end of each rail is connected, a breast-roll mounted on said frame, struts connecting said frame and the rails, braces between the rails and the struts, spring supporting-bars, adjustable connections between the upper ends of said bars and the frame, means for supporting the lower ends of the bars, a spring-bar connected to the frame, and means for operating the bar to vibrate the frame, substantially as described.

13. In a paper-making machine the combination with the pair of shaking-section rails of pairs of plates pivoted together and each pair of plates being pivotally supported, said plates forming supports for the inner ends of the rails, means for giving the other ends of

the rails a vertical adjustment, and vibrating means substantially as described.

14. In a paper-making machine, the combination with a pair of pivotally-mounted supports, a pair of shaking-section rails, pivotal connections between one end of said rails and the supports, a frame connected to the other end of the shaking-section rails, spring-supports for the frame, adjustable connections between the frame and said supports, and vibrating means, substantially as described.

15. In a paper-making machine, the combination with a pair of pivotally-mounted supports, of a pair of shaking-section rails, pivotal connections between one end of the rails and the supports, table-rolls mounted on the rails, a frame to which the other end of the shaking-section rails is connected, a breast-roll mounted on said frame, spring supporting-bars, connections between the frame and the upper ends of said bars, means for supporting the lower ends of the bars, means for giving the frame a vertical adjustment with respect to the bars, and vibrating means, substantially as described.

16. In a paper-making machine, the combination with a pair of pivotally-mounted supports, of a pair of shaking-section rails, pivotal connections between one end of the rails and the supports, a U-shaped frame to which the other end of the shaking-section rails is connected, a breast-roll carried by said frame, struts connecting the frame and the rails, a pair of spring-bars, connections between the frame and the upper ends of the bars, means for supporting the lower ends of the bars, means for giving said frame a vertical adjustment with respect to the bars, and vibrating means, substantially as described.

17. In a paper-making machine, the combination with a pair of shaking-section rails, of a frame to which the rails are connected at one end, supports for the frame, means for vertically adjusting the frame with respect to its supports, a pair of pivoted supports for the other end of the rails, a cap-piece between the end of each rail and the support therefor, pivotal connections between the cap-pieces and the supports, and vibrating means, substantially as described.

18. In a paper-making machine, the combination with a pair of shaking-section rails, of a frame to which the rails are connected at one end, supports for the frame, means for vertically adjusting the frame with respect to its supports, a pair of pivoted supports for the other end of the rails, a socketed cap-piece between the end of each rail and the support therefor, pivotal connections between the cap-pieces and their supports, and vibrating means, substantially as described.

19. In a paper-making machine, the combination with a pair of pivotally-mounted supports, of a pair of shaking-section rails, a pair of pivoted cap-pieces for the rails, each cap-piece being pivoted to a support, a U-shaped frame to which the other ends of the shaking-section rails are connected, a breast-roll carried by the frame, struts connecting the frame and the rails, a pair of spring-bars, connections between the frame and the upper ends of the bars, means for supporting the lower ends of the bars, means for giving the frame a vertical adjustment with respect to the bars, and vibrating means, substantially as described.

20. In a paper-making machine, the combination with a pair of shaking-section rails, of a frame to which the outer ends of said rails are connected, supports for the frame, vibrating means, connecting means between the vibrating means and the frame, and springs operating in connection with said vibrating means, substantially as described.

21. In a paper-making machine, the combination with a pair of shaking-section rails, of a frame to which the outer ends of said rails are connected, spring-supports for the frame, vibrating means, connections between the vibrating means and the frame, and springs operating in connection with said vibrating means, substantially as described.

22. In a paper-making machine, the combination with a pair of shaking-section rails, of a frame to which the rails are connected, supports for said frame, vibrating means, a pair of oppositely-acting springs, and bearings for said springs connected with the frame, substantially as described.

23. In a paper-making machine, the combination with a pair of shaking-section rails, of a frame to which the rails are connected, spring-supports for said frame, vibrating means, a pair of oppositely-acting springs, and bearings for said springs connected with the frame, substantially as described.

24. The combination with a pair of shaking-section rails, of a U-shaped frame to which the ends of the rails are connected, a pair of supports for the frame, vibrating means, a pair of oppositely-acting springs, and bearings for the springs connected with the U-shaped frame, substantially as described.

25. The combination with a pair of shaking-section rails, of a U-shaped frame to which the ends of the rails are connected, a pair of spring-supports for the frame, vibrating means, a pair of oppositely-acting springs, and bearings for the springs connected with the U-shaped frame, substantially as described.

26. The combination with a pair of shaking-section rails, of a U-shaped frame to which the rails are connected, supports for the frame, vibrating means connected to the frame, bearings connected to the under side of the frame, and a pair of springs acting against said bearings, substantially as described.

27. In a paper-making machine, the combination with a pair of shaking-section rails, of a U-shaped frame to which the outer ends of said rails are connected, means for supporting the inner ends of the rails so as to permit them to move vertically and horizontally, t

pair of spring-supports for the U-shaped frame, adjustable connections between the frame and the supports, vibrating means, bearings connected to the U-shaped frame, and springs operating against the bearings, substantially as described.

28. In a paper-making machine, the combination with a pair of shaking-section rails, of a frame to which the outer ends of the rails are connected, supports for said frame, vertically-adjustable connections between the frame and the supports, means for supporting the inner ends of the rails so as to permit a movement thereof both vertically and horizontally, a spring-bar connected to the frame, mechanism for operating the bar, bearings connected to the frame, and springs operating against the bearings, substantially as described.

29. In a paper-making machine, the combination with a pair of shaking-section rails, of a U-shaped frame to which the outer ends of the rails are connected, spring-supports for said frame, vertically-adjustable connections between the frame and the supports, means for supporting the inner ends of the rails so as to permit a movement thereof both vertically and horizontally, a spring-bar connected to the frame, mechanism for operating the bar, bearings connected to the frame, and springs operating against the bearings, substantially as described.

30. In a paper-making machine, the combination with a pair of shaking-section rails, of a frame to which the outer ends of the rails are connected, a pair of blocks, vertically-adjustable connections between the frame and the blocks, a pair of spring-bars, the upper ends of which engage cavities in the blocks, means for supporting the lower ends of the bars, and vibrating means, substantially as described.

31. In a paper-making machine, the combination with a pair of shaking-section rails, of a frame to which the outer ends of the rails are connected, a pair of blocks, vertically-adjustable connections between the frame and the blocks, a pair of spring-bars, the upper ends of which engage cavities in the blocks, pins located in the blocks against which the upper ends of the bars bear, means for supporting the lower ends of the bars, and vibrating means, substantially as described.

32. In a paper-making machine, the combination with a pair of shaking-section rails, of a frame to which the outer ends of the rails are connected, means for supporting the inner ends of the rails, supports for the frame, vibrating means, bearings connected to the frame, springs resting against the bearings, collars abutting against the opposite ends of the springs, and means for adjusting the collars, substantially as described.

33. In a paper-making machine, the combination with a pair of shaking-section rails, of a frame to which the outer ends of the rails are connected, means for supporting the inner ends of the rails, struts connecting the frame and the rails, hangers depending from the rails, bearings supported by the hangers, a wire guiding and carrying roll mounted in the bearings, brackets carried by the struts, and means supported by the brackets for preventing endwise movement of the roll with respect to its bearings, substantially as described.

34. In a paper-making machine, the combination with a pair of shaking-section rails, of a U-shaped frame to which the outer ends of the rails are connected, means for supporting the inner ends of the rails, struts connecting the frame and the rails, hangers depending from the rails, bearings supported by the hangers, a wire guiding and carrying roll mounted in the bearings, brackets carried by the struts, and means supported by the brackets for preventing endwise movement of the roll with respect to its bearings, substantially as described

35. In a paper-making machine, the combination with a pair of shaking-section rails, of a U-shaped frame to which the outer ends of the rails are connected, spring supporting-bars for said frame, adjustable connections between the upper ends of the bars and the frame, means for supporting the lower ends of the bars, a spring-bar connected to the frame, means for operating the bar to vibrate the frame, bearings connected to the frame, a support passing through the bearings, springs surrounding the support and having one end resting against the bearings, collars against which the other ends of the springs abut, means for adjusting the collars, and means for supporting the inner ends of the shaking-section rails so as to permit them to move vertically and horizontally, substantially as described.

In testimony whereof I have hereunto set my hand in the presence of two subscribing witnesses.

THOMAS H. SAVERY.

Witnesses:
WM. H. WALKER,
SAMUEL F. SMEDLEY.

1028

No. 654,651. Patented July 31, 1900.

H. L. KUTTER.

PAPER MAKING MACHINE.

(Application filed July 13, 1899.)

(No Model.)

26

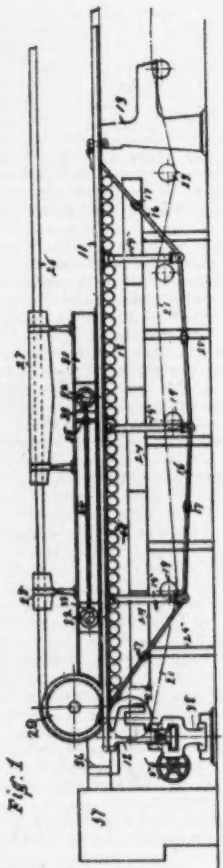

Fig. 1.

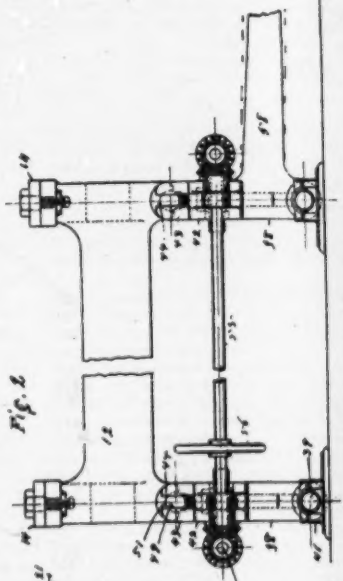

Fig. 2.

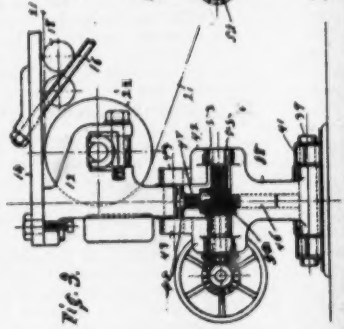

Fig. 3.

WITNESSES.
N. E. Carr.
L. Yeager.

Herman L. Kutter. INVENTOR.
By Robert S. Carr. Atty.

UNITED STATES PATENT OFFICE. 27

HERMAN L. KUTTER, OF HAMILTON, OHIO, ASSIGNOR OF ONE-HALF TO FRANK C. TROWBRIDGE.

PAPER-MAKING MACHINE.

SPECIFICATION forming part of Letters Patent No. 654,651, dated July 31, 1900.

Application filed July 13, 1899. Serial No. 723,735. (No model.)

To all whom it may concern:

Be it known that I, HERMAN L. KUTTER, a citizen of the United States, and a resident of Hamilton, Ohio, have invented certain new and useful Improvements in Paper-Making Machines, of which the following is a specification.

My invention relates to paper-making machines of that class known as "Fourdrinier" machines, wherein the making-wire is vibrated laterally by a shake-frame to cause the fibers of pulp to become interlaced thereon; and the objects of my improvement are to support the shake-frame at its ends, to strengthen the side rails by means of trusses, to dispense with intermediate floor-supports, to provide extensible supports for the front end of the shake-frame, and to provide mechanism to vertically adjust the front end of the shake-frame during the operation of the machine. These objects are attained in the following-described manner, as illustrated in the accompanying drawings, in which—

Figure 1 is a side elevation of the shake-frame supported at its ends by a fixed frame and extensible supports; Fig. 2, a front elevation of the extensible supports, with breast-roll frame mounted thereon with parts removed; Fig. 3, a side elevation of one of the extensible supports, showing the end of the breast-roll and the breast-roll frame thereon, together with portions of the shake-frame.

In the drawings, 11 represents the shake-frame, pivotally mounted at its front end on breast-roll frame 12 and at its rear end on fixed or couch roll frame 13. Side rails 14 are undertrussed by means of struts 15 and tie-rods 16, that are adjustable by means of turnbuckles 17, to prevent the side rails from sagging. Table-rolls 18 are journaled in bearings, (not shown,) that are removably attached to the side rails in the usual manner. Wire rolls 19 are removably journaled in bearings on corresponding struts under the rails. Making-wire 21 forms an endless apron that is driven by the usual couch-roll (not shown) and around the breast-roll 22, with its upper run over the table-rolls and its under run carried by the wire rolls. The breast-roll frame is provided with an overhanging bracket portion, with the recess for the journal of the breast-roll in the under side, so that the breast-roll may be inserted from the bottom or below the bracket. After the roll has been inserted the journal-block is placed in the recess, and a bolt is placed in holes in the walls of the recess, so as to support the block and roll. An adjustably-supported roll 23 is arranged to take up the slack in the making-wire in the ordinary manner. Save-all trough 24 is formed in sections and supported under the table-rolls on floor-stands 25. Deckle-straps 26 travel through wash-troughs 27, guides 28, and around pulleys 29. Deckle-bars 31 are laterally adjustable by means of screws 32, that are operated through bevel-gears 33 by cross-shaft 34, with hand-wheel 35 thereon. Apron 36, attached to the breast-roll frame, receives the pulp from the stationary feed-box 37 and discharges it on the making-wire just over the breast-roll. Standards 38 are journaled by means of trunnions 39, formed thereon to oscillate in fixed floor-bearings 41. Brackets 42, formed on opposite sides of each standard, extend upwardly therefrom and terminate on opposite sides of the breast-roll frame in the form of guides 43, that are parallel with each other. Open slots 44 are formed in the top of the guides and in the same vertical plane. A worm-wheel 45 is mounted on the top of each standard, with one end of its hub over vertical hole 46 therein, and an adjusting-screw 47 is threaded through the hub of each worm-wheel and movably extends within the opening or hole 46 thereunder. A cylindrical transverse bar 48, with flattened ends 49, that move in slots 44 of the guides, is formed on the top of each screw, whereby the movements of the screws are limited to vertical adjustments only. Said bars are seated in transverse grooves 51, formed in the under edge of the breast-roll frame and near its ends, so that said frame may be properly supported thereon. Worm-shafts 52 are journaled in bearings 53 on the respective standards 38 and arranged to rotate the worm-wheels thereon and effect the vertical adjustment of the screws 47 and the breast-roll frame. Cross-shaft 55, provided with hand-wheel 56, spans the distance between the standards and communicates motion through miter-gears at its ends to both

1030

of the worm-shafts simultaneously. Projecting bar 58 is either formed integral with or secured to one of the standards and is oscillated in a vertical plane by the usual eccentric mechanism (not shown) or otherwise. The vertical oscillation of said bar imparts lateral oscillatory motion to the standards and reciprocates the breast-roll frame thereon. As the front end of the shake-frame is mounted on the breast-roll frame, it is given the proper amount of lateral shake by the reciprocation of said frame to cause the fibers of pulp on the making-wire to become properly interlaced in transit toward the fixed frame. The lateral vibration of the shake-frame is so short that the vertical arc described in its movement is not appreciable and does not prevent the even distribution of the pulp on the making-wire.

A vertical adjustment of the front end of the shake-frame is required for the use of pulp of different grades. For this purpose the standards are made extensible by the adjustment of the screws therein by means of the worm-gear mechanism and are simultaneously adjustable by means of the cross-shaft and hand-wheel that communicate with them through the miter-gears at each end. It is evident that the adjustment of the shake-frame may be accomplished while the machine is in operation, and the amount of adjustment may be regulated with much precision by the observation of the pulp in motion.

Having fully described my improvement, what I claim as my invention, and desire to secure by Letters Patent of the United States, is—

1. In a paper-making machine, the combination, with oscillatory standards, the upper end of each of which is formed into guides and slotted vertically and its intermediate portion is provided with horizontal and vertical recesses, a worm-wheel in the horizontal recess and a screw in the vertical recess, the upper end of the screw being provided with a transverse bar, the ends of which fit in the slots in the guides, means for moving the worm-wheels in unison, and a breast-roll frame supported on said transverse bars.

2. In a paper-making machine, the combination, with oscillatory standards, the bottom of each of which is provided with a journal-bearing and the upper end is formed into guides and slotted vertically and the intermediate portion is provided with horizontal and vertical recesses and with a laterally-projecting bar, a worm-wheel in the horizontal recess, a screw in the vertical recess the upper end of which is provided with a transverse bar, and a breast-roll frame on said bars.

3. In a paper-making machine, the combination, with oscillatory standards, each of which is provided with means for adjusting the height of the breast-roll frame, of a breast-roll frame thereon, said frame being provided with overhanging brackets, the opening for each of which is downward, a bolt through the walls of said opening, and a breast-roll journaled in the brackets above said bolts.

HERMAN L. KUTTER.

Witnesses:
R. S. CARR,
DAVID PIERCE.

1031

No. 683,949. Patented Oct. 8, 1901.

H. L. KUTTER.

PAPER MAKING MACHINE.

(Application filed Feb. 9, 1901.)

30

(No Model.)

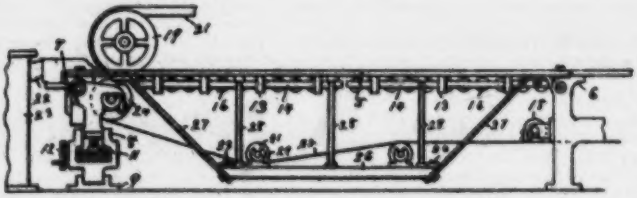

Fig. 1.

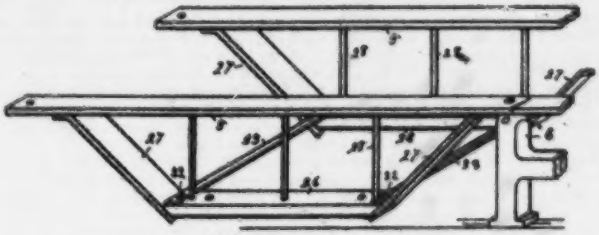

Fig. 2.

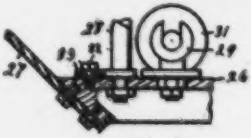

Fig. 4.

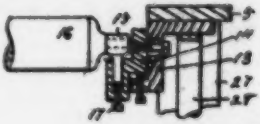

Fig. 3.

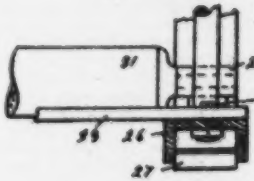

WITNESSES.

A. A. Gray.

John Francis.

Herman L. Kutter. INVENTOR.

By Robert S. Carr. Atty.

1032

UNITED STATES PATENT OFFICE.

HERMAN L. KUTTER, OF HAMILTON, OHIO, ASSIGNOR OF ONE-HALF TO FRANK C. TROWBRIDGE, OF SAME PLACE.

PAPER-MAKING MACHINE.

SPECIFICATION forming part of Letters Patent No. 683,949, dated October 8, 1901.

Application filed February 9, 1901. Serial No. 46,733. (No model.)

To all whom it may concern:

Be it known that I, HERMAN L. KUTTER, a citizen of the United States, and a resident of Hamilton, Ohio, have invented certain new and useful Improvements in Paper-Making Machines, of which the following is a specification.

My invention relates to paper-making machines of the Fourdrinier class; and the objects of my improvement are to support the shake-frame entirely by the ends of its top rails, to suspend the bottom rails from the ends of the top rails, to support the middle portion of the top rails by struts mounted on the bottom rails, to connect the bottom rails together by means of transverse braces to prevent them from spreading under the momentum of the wire rolls mounted thereon, and to maintain uniformity in the extent of the shaking movement of the table and wire rolls, whereby the formation of wrinkles in the making wire is prevented. These objects are attained in the following-described manner, as illustrated in the accompanying drawings, in which—

Figure 1 is a side elevation of the shake-frame in mounted position; Fig. 2, a perspective view showing the construction of the shake-frame; Fig. 3, a cross-section of the top and bottom rails with parts attached, and Fig. 4 a longitudinal section of portions of the bottom rail and its connections.

In the drawings, 5 represents the top rails of the shake-frame, pivotally mounted at their respective ends on the fixed frame 6 and the breast-roll frame 7. The breast-roll frame is mounted at its ends on the respective supports 8, which are trunnioned to oscillate in floor-bearings 9 to impart the shaking motion to the front end of the shake-frame. Said supports are made extensible in length by means of screw and worm-gear mechanism 11, and they may be adjusted simultaneously by means of chain and sprocket-wheel connections 12 with the mechanism, whereby the front end of the shake-frame may be adjusted in height during the operation of the machine. Brackets 13 depend at intervals from the top rails, and plates 14 are adjustably supported thereon. Bearings 15, wherein the table-rolls 16 are journaled, are independently adjustable on plates 14 by means of set-screws 17. Stretcher-roll 18 is adjustably secured to the fixed frame, and deckle-pulleys 19 carry deckle-straps 21 in the usual manner. Chute 22 leads from the feed-box 23 to deliver the pulp over breast-roll 24 and on the making wire 25.

The bottom rails 26 of the shake-frame are inflexible and about one-half the length of the top rails 5. They are rigidly suspended from the end portions thereof by means of stiff plates 27, which are laterally inflexible and secured at an angle to the corresponding ends of the bottom rails. Columns 28, mounted on the bottom rails, are arranged to support the middle portion of the top rails to keep them in alinement and prevent them from sagging.

As seen in Fig. 4, the lower ends of the plates 27 are turned at a right angle to their length, and these angled ends engage the lower edges of the inclined lugs of the ends of the bottom rails, to which they are secured, thus preventing endwise strain on the parts and, furthermore, serving to prevent lateral movement of the inclined braces.

Bearings 29 for the wire rolls 31 are mounted on the bottom rails, and transverse braces 33 connect corresponding ends of the bottom rails together. Said braces are pivotally secured to the bottom rails by means of bolts 32 and, together with plates 27, serve to prevent the bottom rails from swinging laterally beyond the vertical plane of the top rails under the momentum imparted to them by the shaking movement of the frame.

By the rigidity of the construction of the shake-frame uniformity is maintained in the distance of the end movement given to the wire rolls and the respective table-rolls directly thereover, which removes the objectionable strain otherwise imparted to the making wire and the tendency thereof to form wrinkles and materially lengthens its life.

Having fully described my improvement, what I claim as my invention, and desire to secure by Letters Patent of the United States, is—

1. In a paper-making machine, the combination with top rails supported at their respective ends on the breast-roll and fixed frames, and inflexible bottom rails formed substantially shorter and registering with the

middle portions of the respective top rails, of rigid inclined plates laterally inflexible, rigidly connecting the corresponding ends of the respective top and bottom rails together and having their lower ends extended at a right angle and engaging inclined lugs on the ends of the bottom rails, columns mounted on the bottom rails and arranged to maintain the middle portions of the top rails in alinement with their end portions.

2. In a paper-making machine, the combination with fixed frame and the breast-roll frame and means for vertical adjustment of the latter, of top rails pivotally mounted at their ends on said frames, inflexible bottom rails of less length than the top rails, inflexible inclined and vertical means for holding the top and bottom rails in vertical alinement, said means having right-angled lower ends and the bottom rails having inclined lugs engaging said ends and means for rigidly connecting the opposite bottom rails and preventing their swinging laterally, and table and wire rolls supported respectively by said top and bottom rails and kept in vertical alinement with each other and means for vertical adjustment of said rolls, substantially as set forth.

HERMAN L. KUTTER.

Witnesses:
D. M. McCLUNG,
R. S. CARR.

1034

No. 809,832. PATENTED JAN. 9, 1906.

J. W. MOORE & J. A. WHITE.

PAPER MAKING MACHINE.

APPLICATION FILED MAR. 15, 1899.

34

2 SHEETS—SHEET 1.

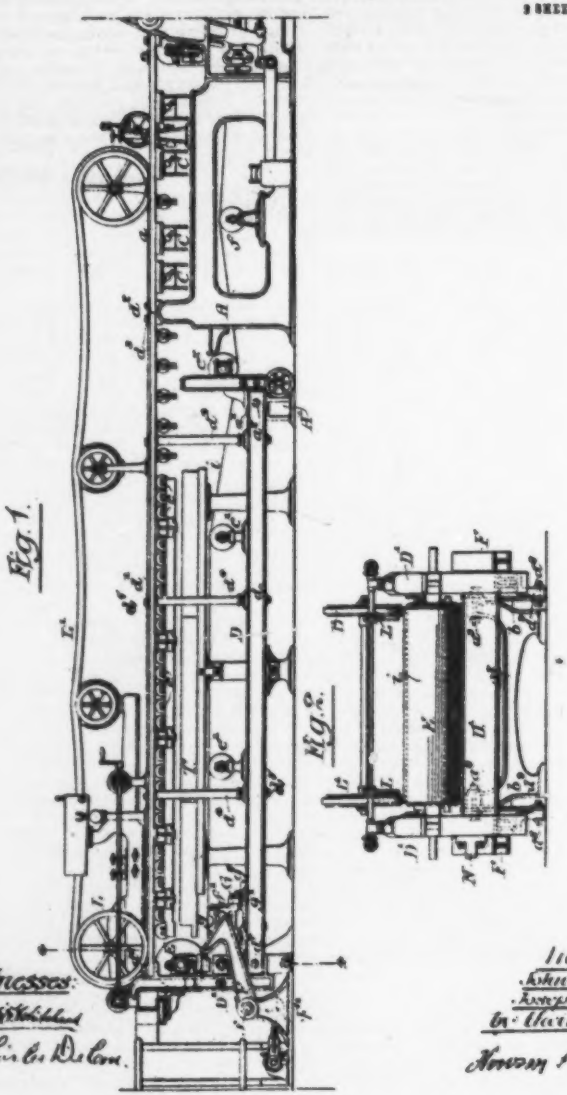

Witnesses:

Chas. C. DeCon.

Inventors:

John W. Moore

Joseph A. White

by Alex. Attorneys

Howson & Howson

1035

No. 909,832. PATENTED JAN. 9, 1906.

J. W. MOORE & J. A. WHITE.

PAPER MAKING MACHINE.

APPLICATION FILED MAR. 15, 1899.

36

2 SHEETS—SHEET 2.

Fig. 3.

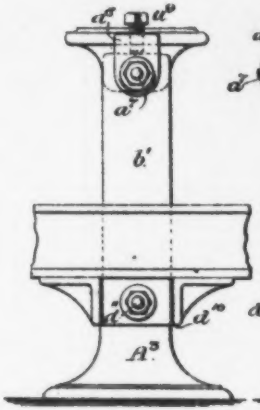

Fig. 4.

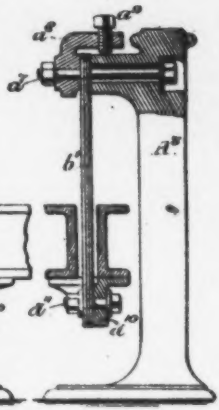

Fig. 5.

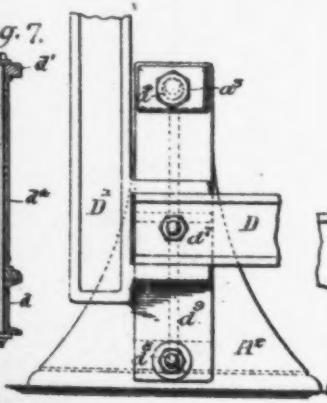

Fig. 7.

Fig. 6.

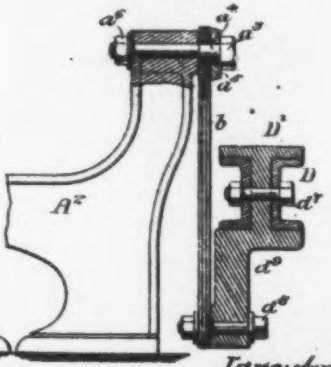

Witnesses:-
Chas. D. Cox

Inventors:-
John W. Moore.
Joseph A. White.
by their Attorneys
Howson & Howson

UNITED STATES PATENT OFFICE. 37

JOHN WARREN MOORE AND JOSEPH ATWOOD WHITE, OF PHILADELPHIA, PENNSYLVANIA.

PAPER-MAKING MACHINE.

No. 809,832. Specification of Letters Patent. Patented Jan. 9, 1906.

Application filed March 18, 1904. Serial No. 198,172.

To all whom it may concern:

Be it known that we, JOHN WARREN MOORE and JOSEPH ATWOOD WHITE, citizens of the United States, and residents of Philadelphia, Pennsylvania, have invented certain Improvements in Paper-Making Machines, of which the following is a specification.

Our invention relates to certain improvements in paper-making machines of the type known as "Fourdrinier" machines, in which a making-wire is traversed over a frame which is agitated, the pulp being allowed to form on the wire in such a manner that the fibers will knit together to form a sheet of paper.

The device is known as a "continuous" machine.

The object of our invention is to improve the construction of the machine for which we have obtained Letters Patent in the United States, No. 620,548, dated February 28,1899, the said invention relating particularly to certain details of construction of the shake-frame.

In the accompanying drawings, Figure 1 is a side view of a Fourdrinier paper-making machine made in accordance with our invention. Fig. 2 is an end view of the same. Figs. 3 and 4 are detail views showing the means of suspending the shake-frame at the outer end. Figs. 5 and 6 are detail views showing the means which we preferably use in suspending the shake-frame at the center, and Fig. 7 is a view illustrating the detail construction of part of the shake-frame.

It will be understood that the invention relates particularly to the Fourdrinier end of the paper-making machine—that is, the portion on which the paper-pulp settles to form a continuous sheet of paper.

Referring in the first instance to Figs. 1, 2, and 3 of the drawings, A is the fixed frame of a paper-making machine. A′ is a fixed standard, which in the present instance is independently mounted on the foundation, but in some instances may form part of the fixed frame. D is the shake-frame, having lower rails d at each side and upper rails d' on each side. The upper rails form a continuation of the rails a on the fixed frame A and are secured at d^2 to the fixed frame, as shown in Fig. 1. The rails d, as shown in Fig. 7, are made up of two channel-beams placed back to back with sufficient space between them to allow for the passage of bolts and for the free movement of the intermediate suspension-plate described hereinafter. In the present instance the rails d' are secured to the fixed frame by bolts d^3, which can be screwed down tightly, so as to make a rigid connection between the rails d' and the fixed frame. The members of the rail d are adapted to sockets a' in the fixed standard A′ and are rigidly secured to said standard by bolts a^2. The rails d d' are connected together at intervals by tie-bolts d^4 and columns d^5. The tie-bolts pass through the columns and through the space between the two members of the rail d, as clearly shown in Fig. 7. An end frame D′ is secured, as illustrated in Fig. 1, rigidly to both the upper and lower rails d d' of the shake-frame, the upper rails being secured to the said end frame by bolts d^6, and the members of the lower rails are adapted to sockets in the said end frame and secured thereto by bolts d^7. Thus the entire shake-frame, consisting of the upper and lower rails and the end frame, is rigidly connected. The rails owing to their length and texture can be readily flexed when the end of the shake-frame is vibrated. It has been found in practice that pivot-joints are objectionable in paper-making machines and should be avoided where possible. The outer end of the shake-frame is suspended from a fixed standard A^3 by suspension-plates b b. (Shown clearly in Fig. 2 and in the enlarged views of Figs. 4 and 5.) These plates are mounted on each side of the machine, as shown, and are secured in any suitable manner. In the present instance these plates are made of spring metal, and it has been found that the best results are obtained when a series of thin plates are used instead of one thick plate, since there is thus secured not only increased flexibility of the plates but also a greatly-extended life for the same. By prolonged use the single-spring suspension-piece ordinarily used at each side of the shake-frame ultimately becomes changed in structure, owing to the long-continued vibratory jarring to which said frame is subjected. From this cause—that is, the molecular change in structure—the tensile strength of the plate is materially diminished and the probability of its failure under the trying operating conditions is greatly increased. In order to avoid this failure, we employ a laminated piece or series

1037

38

of plates, as illustrated, in which the elements are not mere duplicates of the single piece ordinarily used, but are pieces of less individual area of cross-section than said single piece. The whole plate, while usually being of about the same cubic contents as the ordinary single piece, is of greater tensile strength and flexibility than the same without the relatively short life and probability of failure noted above.

In Figs. 3 and 4 each suspension-plate is shown made up of three spring-pieces suspended from a bolt a^2, having an eccentric portion a', this latter being adapted to fit an opening in the suspension-plates and to an opening in the clamp-block a^3. The bolt has a head at one end, and a nut a^4 is turned on its bolt; but by backing off the nut the bolt can be turned so that the eccentric will raise or lower the plates, and thus raise or lower the shake-frame.

The lower end of the plates b is rigidly secured by a bolt d^9 to a bracket d^{10}, forming part of the end frame D'. From this it will be seen that the free end of the shake-frame is suspended from the standard by flexible plates, dispensing with all loose joints and bearings in this the vital part of the machine.

Intermediate suspension-plates are preferably provided, especially on large machines, as clearly illustrated in Figs. 1, 5, and 6.

In order to allow for the vertical adjustment of the frame, the bolts a^2, from which the suspension-plates b' are hung, are vertically adjustable. The clamp-block a^3 in the present instance extends over the top of the bearing A^1 and has a set-screw a^4, so that when it is necessary to adjust the shake-frame the bolt a^2 is loosened, and the shake-frame is adjusted by turning the eccentric-bolts a^2, when the plate b' with its bolt will be raised, and after the adjustment is made the set-screw a^4 is turned so as to bear upon the standard A^1. The middle of the shake-frame is thus supported by the suspension-plates b', which take a certain amount of strain off the plates b. In the present instance the plates b' pass through the space between the channel members of the lower rail d, as in Fig. 6, and are secured to a bracket d^{20} on the rail d by a bolt d^{21}. The vertical adjustment of the shake-frame is provided for, as it is found that in certain classes of paper when the machine is running at a certain speed the shake-frame should be in certain positions to accomplish the best results.

In some instances the eccentric-bolts a^2 may be mounted in bearings in the shake-frame and the plates fixed rigidly to the standard, or where an extended adjustment is required the bolts d^9 may be eccentric as well as the bolts a^2; but it is found that the construction shown in the drawings is preferable and sufficient for ordinary purposes.

We do not in this application claim, broadly, the means for vertically adjusting the shake-frame, as this forms the subject of a separate application filed on the 6th of March, 1897, Serial No. 626,346.

The shake-frame carries the breast-roll E, the wire-carrying rolls e, and the supporting-rolls e' for the return run of the wire and also the deckle-frame L and the deckle-straps L'. The bearings for the carrying-rolls e are secured to the upper rails d' of the shake-frame. The breast-roll E is adapted to bearings e^3 on the end frame D', and the supporting-rolls e' are carried in bearings supported by the lower rails d of the shake-frame.

The making-wire i passes around the breast-roll, over the carrying-rolls e, over the suction-boxes C, around the lower couch-roll, and on its return passes over the supporting-rolls carried by the shake-frame to the breast-roll. Thus it will be seen that the making-wire is carried partly by the fixed frame of the machine and partly by the shake-frame; but as the vibrating movement is so limited the wire will readily accommodate itself to this movement.

The breast-roll is so heavy and cumbersome that it is a difficult matter to remove it from the machine when an old making-wire is to be removed and a new one substituted therefor. In order to readily remove the breast-roll, two levers F F are mounted on the sides of the machine, and these are pivoted at f to a standard F^2. The long arm of each lever is so shaped at its end that when it is moved upward it will engage the trunnion of the breast-roll and lift it out of its bearing. Suitable mechanism for operating these levers is provided, which, as it forms no part of the present invention, will not be described. It will be understood that before the breast-roll is removed a number of the carrier-rolls are also detached and the save-all T, which is of the ordinary construction, is withdrawn, so as to leave the space clear for the removal of the old making-wire and the placing of the new making-wire.

We claim as our invention—

1. The combination in a paper-making machine, of a shake-frame having flexible side frames connected to each other, each of said frames consisting of upper and lower members, with means rigidly connecting the same whereby the upper member is carried by the lower member, standards having secured to them flexible suspension-plates attached to one end of the shake-frame, and a fixed member to which the lower members of the shake-frame are rigidly attached, with means for vibrating the shake-frame, substantially as described.

2. The combination in a paper-making machine, of a fixed frame, a fixed standard, a shake-frame consisting of upper and lower side members and an end frame, means for securing the members of the shake-frame rig-

idly together, a rigid connection between the lower side rails and the fixed standard, and a rigid connection between the upper side rails and the fixed frame, means for supporting the free end of the shake-frame, and means for vibrating said end, substantially as described.

3. The combination of the shake-frame of a paper-making machine, consisting of upper and lower rails connected together, an end frame secured to the ends of the said rails, the lower rails being each made of two channel-bars, with a space between them, columns extending from the lower to the upper rails, tie-bolts extending through the upper rails and the columns and through the space between the channel-bars of the lower rails and means for supporting the said shake-frame, substantially as described.

4. The combination in a paper-making machine, of a shake-frame having upper and lower rails, the lower rails made up of two spaced members, a standard, a flexible plate suspended from said standard and passing through the space between the members of the lower rails, and a bracket carried by the lower rails to which said flexible plate is clamped, substantially as described.

5. The combination in a paper-making machine, of a shake-frame having upper and lower rails, the lower rails each consisting of two members spaced, a bracket secured to each lower rail, a standard, a bolt adjustable in said standard, a flexible suspension-plate hung from said bolt and secured to the bracket on the lower rails of the shake-frame, a clamp-block between which and an extension of the standard the flexible plate is clamped, a portion of the clamp-block extending over the standard, and a set-screw by which the clamp-block, bolt, and flexible plate can be raised to adjust the shake-frame, substantially as described.

In testimony whereof we have signed our names to this specification in the presence of two subscribing witnesses.

JOHN WARREN MOORE.
JOSEPH ATWOOD WHITE.

Witnesses:
WILL. A. BARR,
JOS. H. KLEIN.

No. 851,227. PATENTED APR. 23, 1907.

W. EIBEL.

FOURDRINIER MACHINE.

APPLICATION FILED FEB. 23, 1907.

42

Fig. 1.

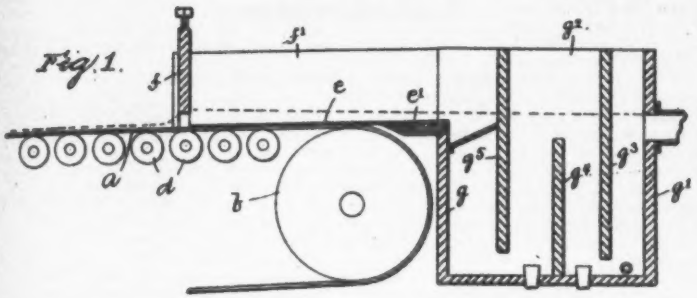

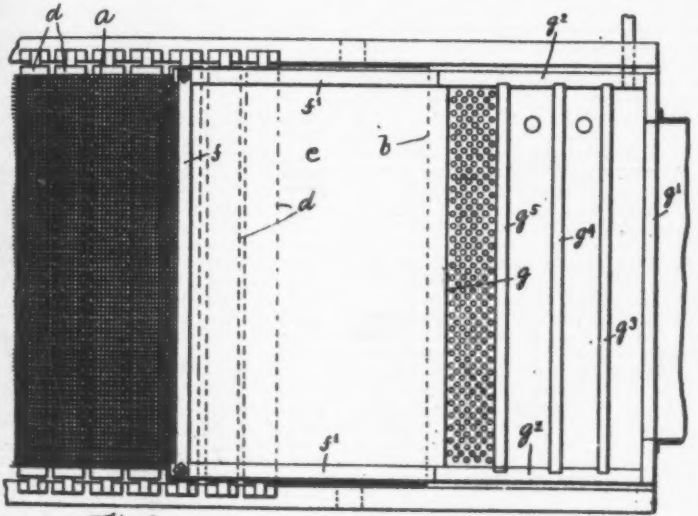

Fig. 2.

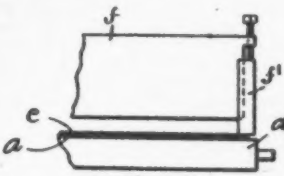

Fig. 3.

Witnesses:
H. B. Davis.
Cynthia Doyle

Inventor:
William Eibel
by Wayne & Hammann
Attys.

1040

UNITED STATES PATENT OFFICE. 43

WILLIAM EIBEL, OF RHINELANDER, WISCONSIN, ASSIGNOR TO EIBEL PROCESS COMPANY, OF BOSTON, MASSACHUSETTS, A CORPORATION OF MAINE.

FOURDRINIER MACHINE.

No. 851,227. Specification of Letters Patent. Patented April 23, 1907.

Application filed February 28, 1907. Serial No. 359,709.

To all whom it may concern:

Be it known that I, WILLIAM EIBEL, of Rhinelander, county of Oneida, State of Wisconsin, have invented an Improvement in Fourdrinier Machines, of which the following description, in connection with the accompanying drawings, is a specification, like characters on the drawings representing like parts.

In Fourdrinier machines, as heretofore constructed and arranged, the paper stock is constantly fed to the flow-box from which it flows into the stock-reservoir which opens out of the flow-box and which extends for a short distance over the breast roll end of the paper-making wire. The stock is then delivered upon the wire, through one or more (usually two) narrow horizontal openings which are provided at the bottom of that end of the stock-reservoir opposite the flow-box. The stock is caused to rise in the stock-reservoir to a considerable height and is purposely maintained at a substantial elevation. As a result the stock issues from the narrow horizontal orifice with considerable velocity due to the pressure of the column of stock in the stock-reservoir, commonly called the head. The stock thus forcibly issuing from the orifice causes a violent commotion on the wire, immediately in front of the stock-reservoir, which is very objectionable. Furthermore the weight of the large volume of stock in the stock-reservoir is sufficient to spring or bend the small rolls which support the wire in front of the breast-roll, and the forcible issuance of the stock from the stock-reservoir also acts to spring or bend the small rolls which support the wire immediately in front of the stock-reservoir. Such springing or bending of the wire-supporting rolls at the bottom of the stock-reservoir in front of the breast-roll and also in front of the stock-reservoir is objectionable; the truer they turn the better. Also, heretofore, the stock, which is fed constantly to the flow-box, rises in the flow-box with considerable commotion and as it flows into the stock-reservoir it does not maintain a level therein but produces a commotion in said reservoir and the stock in said reservoir, is consequently in a state of great agitation resembling violent boiling.

This invention has for its object to construct and arrange the flow-box and stock-reservoir and its delivery orifice of a Fourdrinier machine in such manner that the stock will rise evenly and uniformly in the flow-box and will flow into and along the stock-reservoir with little commotion, in a shallow stream maintaining a smooth and substantially constant surface, and will be delivered upon the wire with little or no commotion immediately in front of the stock-reservoir, thereby permitting the fibres and other paper forming ingredients to begin to settle on the wire immediately, resulting in improving the formation of the paper on the wire and also in obviating springing or bending the small wire-supporting rolls in front of the stock-reservoir, and, at the bottom of the stock-reservoir.

Figure 1 shows in vertical longitudinal section the flow-box and stock-reservoir embodying my invention and a portion of the paper-making wire. Fig. 2 is a plan view of the flow-box and stock-reservoir and paper-making wire shown in Fig. 1. Fig. 3 is a detail, showing in front elevation a portion of the stock-reservoir.

a represents the usual Fourdrinier wire or paper-making wire; which is downwardly inclined according to my Patent No. 845,224 dated Feb. 26, 1907; *b* the breast-roll; *d* the small tubular rolls which support the paper-making wire between the breast-roll and the guide roll, the latter not being herein shown.

e represents the flexible apron which is attached to the apron board *e'*, and which extends over said board and over the end portion of the wire at the breast-roll, terminating at a point close to or beneath the slicer *f*. The said apron forms the bottom of the stock-reservoir and the slicer *f* one end thereof, while *f''*, *f'* represent its side walls, which extend from the slicer to the flow-box.

The apron board *e'* is attached to the front wall of the flow-box at the top.

The flow-box comprises the front wall *g*, rear wall *g'*, side walls *g²*, *g²*, and contains within it several partition walls, three being herein shown, as *g³*, *g³*, *g³*, which divide the flow-box into four vertical compartments.

The stock first enters the compartment formed between the rear wall *g'* and the partition wall *g³*, it flowing over the top of said rear wall *g'* into said compartment, and said partition wall *g³* is so placed in the flow box

and made of such dimensions as to provide an opening beneath it for the passage of the stock into the compartment formed between the partition walls g^2 and g^3, and said partition wall g^3 is so placed in the flow-box and made of such dimensions as to provide a passage above it for the stock into the compartment which is formed between the partition walls g^3 and g^4, and said partition wall g^4 is so placed in the flow-box and made of such dimensions as to provide an opening beneath it for the passage of the stock into the compartment formed between the partition wall g^4 and the front wall g of the flow-box. The several compartments are made of different widths to provide for an increase in the volume of stock, as for instance, each successive compartment is made wider than the preceding one. An outlet is provided for each compartment, except the last one of the series, and in operation said outlets are closed. They are provided for the purpose of cleaning out the box, when the machine is at rest, although the outlet of the first compartment of the series may be connected by a pipe with the pump.

By providing a series of compartments, as herein shown, the stock becomes more uniformly and thoroughly mixed, which is particularly desirable if additional water is supplied while it passes through the flow-box. Near the top of the last compartment of the series, as for instance, between the partition wall g^4 and the front wall g, a perforated plate is placed, which is arranged obliquely to a horizontal plane and the stock passes up through the perforations in said plate. By means of the several partition walls which divert the flow of stock and the perforated plate the stock rises in the last compartment of the series with little commotion and is quite free from bubbles, so that it will flow into and along the stock-reservoir in a shallow stream evenly and uniformly and will maintain a substantially constant level therein.

It is not herein intended that the stock shall accumulate in the stock-reservoir, to produce a head, and to provide for thus controlling the volume of stock in the stock-reservoir the horizontal opening at the bottom of the stock-reservoir, at that end opposite the flow-box, is made very large to thereby permit the stock to escape as fast as it enters the stock-reservoir, only holding back sufficient stock in the reservoir to maintain the lower edge of the slicer in constant engagement with the stock and prevent the escape of froth and bubbles in excessive amounts.

With my improved flow-box and the machine otherwise arranged according to my present invention the surface of the stream of stock flowing through the reservoir will be so smooth and so regular in depth that the slicer will need to penetrate but very slightly below its top level. The slicer should never be lowered more than is necessary to accomplish this result.

If the slicer should be lowered the stock will accumulate in the stock-reservoir and produce a head, and if the slicer should be raised its engagement with the stock will be broken. By thus constructing and arranging the flow-box and slicer the objects of my invention are accomplished, viz., the stock rises in the flow-box without commotion, is delivered to the stock-reservoir evenly and uniformly, and is then delivered upon the wire in front of the stock-reservoir with little or no commotion on the wire whatsoever, and the small wire-supporting rolls at the bottom of the stock-reservoir, in front of the breast-roll, and also in front of the stock-reservoir will not be sprung or bent.

Having thus described my invention, what I claim as new and desire to secure by Letters Patent is:—

1. A Fourdrinier machine having a downwardly moving paper-making wire and a stock-reservoir with its slicer disposed with its lower edge just below the top level of the stock flowing through said reservoir, substantially as described.

2. A Fourdrinier machine having a flow-box in open communication with the stock-reservoir and a perforated plate obliquely arranged in one of its compartments, substantially as described.

3. A Fourdrinier machine having a flow-box in open communication with the stock-reservoir comprising a plurality of compartments, alternately arranged in open communication with each other at the top and bottom, a perforated plate obliquely arranged in one of said compartments and a downwardly moving paper-making wire and a slicer disposed with its lower edge just below the top level of the stock flowing through the reservoir, substantially as described.

In testimony whereof, I have signed my name to this specification, in the presence of two subscribing witnesses.

WILLIAM EIBEL.

Witnesses:
B. J. Noyes,
H. B. Davis.

1042

No. 691,333. Patented Jan. 14, 1902.

C. E. BARRETT & J. E. HORNE.

PAPER MAKING MACHINE.

(Application filed June 26, 1901.)

(No Model.) 3 Sheets—Sheet 1

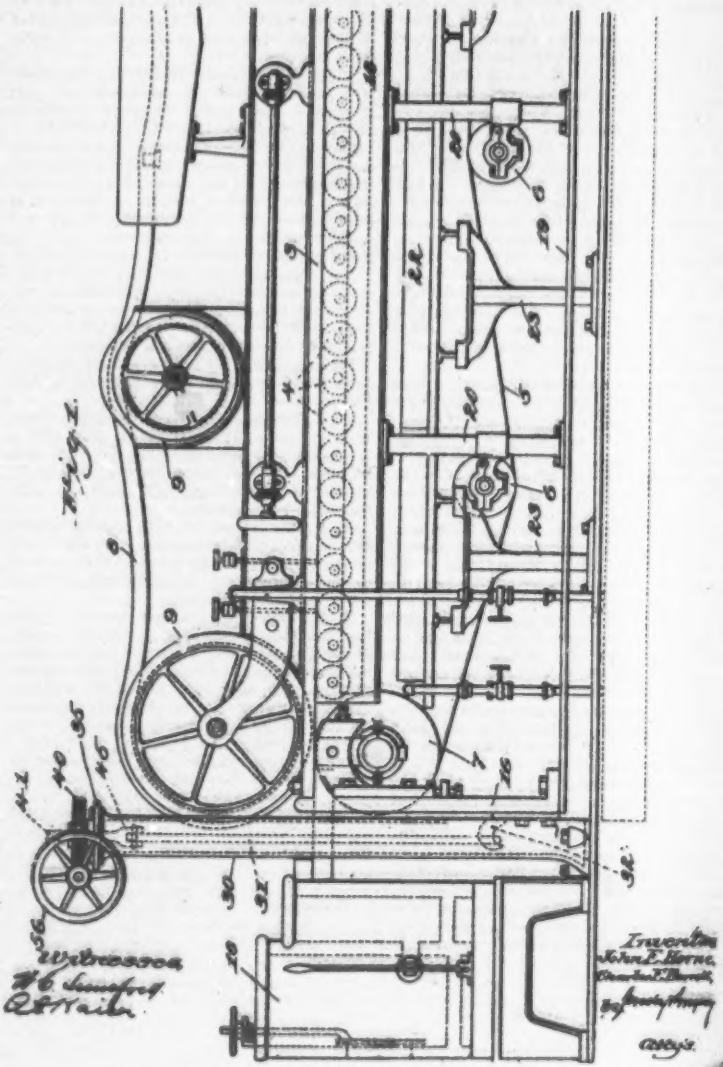

1043

No. 691,3[illegible]3. Patented Jan. 14, 1902.

C. E. BARRETT & J. E. HORNE.

PAPER MAKING MACHINE.

(Application filed June [illegible], 1901.)

48

(No Model.) 3 Sheets—Sheet 2.

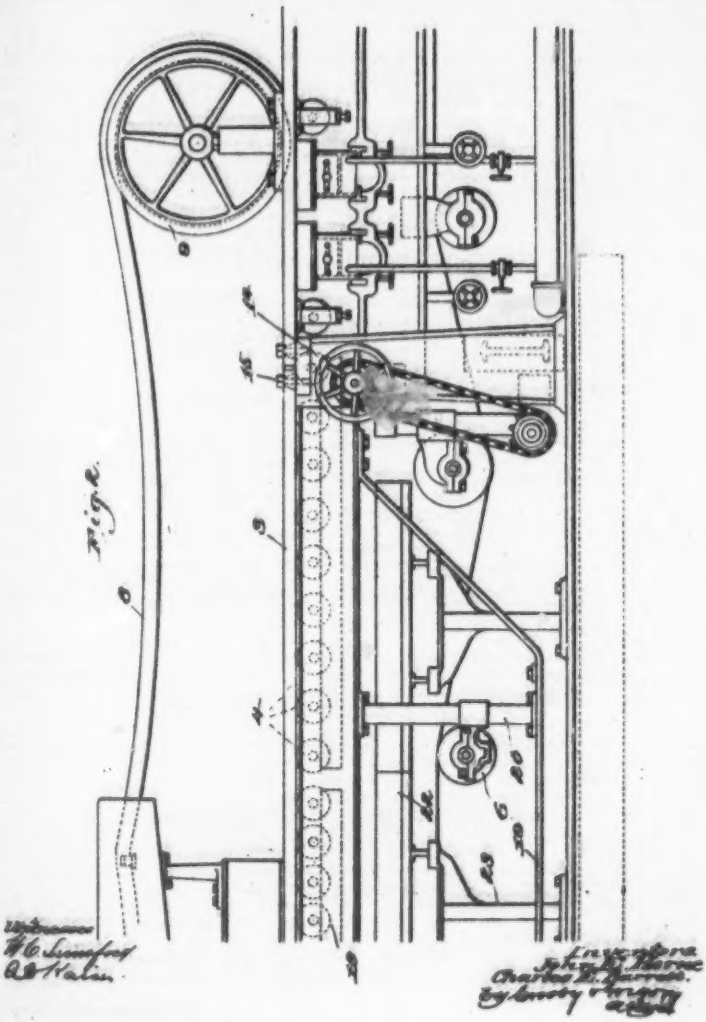

1044

No. 691,333. Patented Jan. 14, 1902.

C. E. BARRETT & J. E. HORNE.

PAPER MAKING MACHINE.

(Application filed June 28, 1901.)

(No Model.) 3 Sheets—Sheet 3.

50

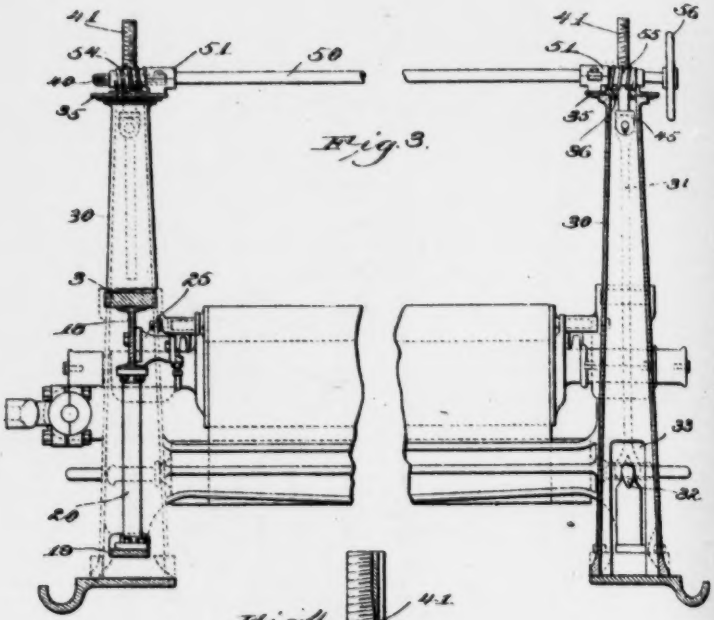

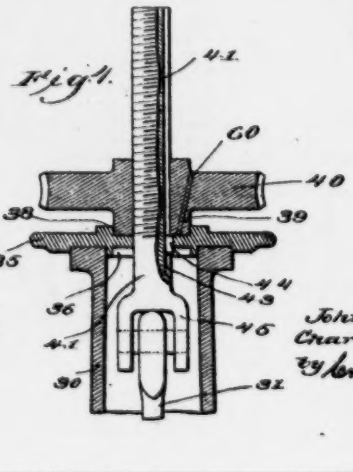

Witnesses.
H. C. Sumstine
R. B. Kane.

Inventors
John E. Horne,
Charles E. Barrett,
by Crosby & Gregory
Atty's.

UNITED STATES PATENT OFFICE.

1045

51

CHARLES E. BARRETT AND JOHN E. HORNE, OF LAWRENCE, MASSACHUSETTS, ASSIGNORS TO THE J. H. HORNE & SONS COMPANY, OF LAWRENCE, MASSACHUSETTS, A CORPORATION OF MASSACHUSETTS.

PAPER-MAKING MACHINE.

SPECIFICATION forming part of Letters Patent No. 691,333, dated January 14, 1902.

Application filed June 28, 1901. Serial No. 66,924. (No model.)

To all whom it may concern:

Be it known that we, CHARLES E. BARRETT and JOHN E. HORNE, citizens of the United States, and residents of Lawrence, county of Essex, and State of Massachusetts, have invented an Improvement in Paper-Making Machines, of which the following description, in connection with the accompanying drawings, is a specification, like figures on the drawings representing like parts.

In Patent No. 634,228, dated October 3, 1899, to C. E. Barrett and J. H. Horne, is shown and described a Fourdrinier paper-making machine wherein the front end of the shake-frame is vertically adjustable in order that the inclination of the upper run of the making-wire may be varied to adapt the machine for pulp of different kinds or grades. In this patent, however, the adjusting devices for the shake-frame are situated underneath the front end thereof, and it is found in practice that the constant moisture and dampness which always exists around the floor of this class of machines is injurious to the adjusting devices.

It is the object of our present invention to modify this type of machine by placing the adjusting devices for the shake-frame above the same and out of reach of any moisture or water that may flow over onto the floor.

A further object of our invention is to provide means for stiffening the shake-rails of the shake-frame, so that the upper run of the making-wire may have a uniform inclination throughout the length of the shake-frame.

With these objects in view our invention comprises means for suspending the front end of the shake-frame from overhead supports, the said suspending devices having means situated above the shake-frame for vertically adjusting the same. The shake-rails are stiffened by making the shake-frame in the form of a truss, as will be hereinafter described.

In the drawings, Figure 1 is a side elevation of the front portion of a Fourdrinier paper-making machine. Fig. 2 is the rear end of the shake-frame, the said Figs. 1 and 2 showing the shake-frame complete. Fig. 3 is a sectional view, and Fig. 4 is a detail of the adjusting mechanism.

The shake-rails 3 of the shake-frame, the table-rolls 4, the wire 5, the wire rolls 6, the breast-roll 7, the deckle-straps 8, the deckle-rolls 9, and the feed-box 10 may be and are of any usual construction, and inasmuch as their function is well known to those skilled in this art further description of them is not necessary.

The rear end of the shake-frame is pivotally supported in some suitable way upon the fixed or couch-roll support 14, preferably by means of the bolts 15, which pass through the ends of the shake-rails and into the fixed support 14. The front end of the shake-frame, as stated above, is vertically adjustable, and to allow of the shake-frame swinging about the support 14 as a fulcrum the apertures in the ends of the shake-rails through which the bolts 15 pass are made slightly tapering, as seen in Fig. 2.

It is essential in this type of machines that the upper run of the making-wire shall be on a straight line in order that the inclination thereof may be uniform throughout the length of the shake-frame, and therefore, since the shake-frame is supported at its ends only, it is necessary to provide some means for stiffening the frame to prevent its sagging in the middle. This we accomplish by providing stiffening members to support the shake-rails and by making the shake-frame in the form of a truss.

In Figs. 1 and 2, 18 indicates beams of some suitable shape, preferably I-beams, which run lengthwise of the shake-frame on either side thereof and on which the shake-rails 3 are supported in any usual way. At the front end of the shake-rails and connected thereto is the breast-roll frame 16 of some suitable construction, and connected to the lower end of the breast-roll frame and to the rear end of the I-beams 18 are the lower cords 19 of the trussed shake-frame, suitable struts 20 being employed between the lower cords and the I-beam 18, said struts being connected to the cords and I-beams in any suitable way. Preferably the wire rolls 6 will be carried

by the struts, as shown. This construction makes a truss of the shake-frame, and by using the I-beams 18 for the top cords of the truss said shake-frame is rendered exceedingly stiff and rigid, thereby obviating any danger of its sagging in the center.

Supported beneath the table-rolls is the usual save-all 22, said save-all being supported independently from the shake-frame upon suitable stationary supports 23.

Referring to Fig. 3, it will be seen that the table-rolls 4 are supported upon suitable brackets 25, connected to the I-beams 18, instead of being supported directly by the shake-rail 3, as is customary.

As stated above, the front end of the shake-frame is suspended from an overhead support, and suitable mechanism above the said frame is provided for vertically adjusting the front end of the shake-frame. In this embodiment of our invention the overhead support comprises two posts or supports 30, situated at the front of the shake-frame and either side thereof, said supports preferably being hollow and each inclosing a suitable suspender 31, which is hung at its upper end from the supports 30 and at the lower end is connected to a suitable hook projection 32, attached to the breast-roll frame 16, the said posts or supports being provided on their sides adjacent the breast-roll frame with an opening 33, into which the hook 32 projects, as seen in Fig. 1. Our invention contemplates some suitable device for simultaneously adjusting the suspenders in a vertical direction, whereby the breast-roll end of the shake-frame may be raised or lowered and yet maintained in a horizontal position. One suitable mechanism for thus simultaneously adjusting the suspenders is illustrated in the drawings, wherein in Fig. 4 it will be seen that the upper ends of the posts 30 are provided with suitable caps 35, which rest upon the posts and have lips 36 extending into the same to thus hold the caps in position. The upper end of each cap-piece 35 is provided with the central circular recess 38, in which rests the hub 39 of a worm-gear 40, the said worm-gear being thus supported for rotation about a vertical axis. A hanger in the form of a rod 41 passes vertically through the cap-piece 35 and axially through the worm-gear 40, and said worm-gear has a screw-threaded engagement with the hanger, as shown in Fig. 4. The hanger is provided with a suitable keyway 43, which engages a key 44 in the cap-piece 35, whereby the said hanger is prevented from rotation, but can move vertically through the cap-piece. The lower end of the hanger has the forked portion 45, to which is pivotally hung the suspender 31, which may be either in the form of a rod or wire cable.

From the above description it will be seen that the suspenders 31 are supported from the upper ends of the posts 30 by means of the gear-wheel 40, and since the lower ends of the suspenders are connected to the breast-roll frame 16 this construction affords means for supporting the front end of the shake-frame from a point above the same. By turning the worm-wheels 40 the hangers 41 may be raised or lowered to raise or lower the front end of the shake-frame, as desired. In order to rotate the worm-wheels 40 in unison, I provide the worm-shaft 50, which extends across the machine and is journaled in suitable boxes 51 at the upper ends of the posts 30, the said shaft having at the ends thereof the worms 54 and 55, which mesh with the worm-gears 40. The end of the shaft is preferably provided with the hand-wheel 56 for rotating the same. Preferably the worm 55 will be a left-hand worm, and the hanger 41, coöperating therewith, will have right-handed screw-threads, while the worm 54 will be a right-handed worm, and the screw-threads of the hanger 41, coöperating therewith, will be left-handed. This arrangement is preferable, because the lateral strain upon the upper ends of the posts 30, due to the turning of the worm-shaft 50, will be in opposite directions. The worm-gears 40 will be provided with suitable oil-holes 60, whereby the contacting surfaces between the hub of the said worm-gears and the cap-piece 35 may be lubricated.

From the above description it will be seen that the front end of the shake-frame is suspended from an overhead support, and the adjusting devices for giving to the said front end of the shake-frame its vertical adjustment are entirely above the shake-frame and cannot therefore be injured by any moisture or water which overflows onto the floor. Moreover, since the suspenders 31 are comparatively long it will be obvious that the lateral motion of the shake-frame will be in approximately a right line instead of on a curved line, as would be the case were the suspenders short or were the shake-frame supported upon short pivotal supports.

Our invention is not restricted to the precise arrangement herein shown, as the same may be modified and rearranged without departing from the spirit and scope of our invention as set forth in the appended claims.

Having fully described our invention, what we claim as new, and desire to secure by Letters Patent, is—

1. In a paper-making machine, a shake-frame, a support situated above the shake-frame, a plurality of suspenders hung from the said support and secured to the shake-frame at its breast-roll end, and means to simultaneously adjust said suspenders vertically, said adjusting means being situated above the shake-frame.

2. In a paper-making machine, a shake-frame, a plurality of posts or supports at the breast-roll end thereof and extending above the frame, suspenders connected at their lower ends to the breast-roll end of the said shake-frame and at their upper ends to said supports, and means for simultaneously adjusting the suspenders in a vertical direction.

3. In a paper-making machine, a shake-frame, a post or support at each side of said shake-frame and at the breast-roll end thereof, said posts extending above the frame, a suspender hung from the top of each of said posts, said suspenders being connected at the lower ends to the shake-frame, and means for simultaneously raising or lowering said suspenders.

4. In a paper-making machine, a shake-frame, a making-wire thereon, hollow posts at the breast-roll end of said shake-frame and extending above the same, suspenders hung from the top of said posts and inclosed therein, said suspenders being connected at their lower ends to the shake-frame, and means to simultaneously raise or lower the suspenders.

5. In a paper-making machine, a shake-frame, a making-wire thereon, hollow posts at the front end of said shake-frame and extending above the same, suspenders hung from the top of said posts and inclosed therein, and connected at their lower ends to the shake-frame.

6. In a paper-making machine, a shake-frame, hollow supports at the front end thereof, suspenders inclosed in said supports and connected to the shake-frame at their lower ends, and means to adjustably hang said suspenders from the supports above the shake-frame.

7. In a paper-making machine, a shake-frame, hollow posts at the front end thereof, suspenders inclosed in said posts, said suspenders being connected at their lower end to the front end of the shake-frame, a worm-gear at the upper end of each post, said gears having a screw-threaded engagement with the suspenders, and means to turn said gears in unison whereby the front end of the shake-frame may be vertically adjusted.

8. In a paper-making machine, a shake-frame, a fixed support for the rear end thereof, hollow posts at the front thereof, a worm-wheel supported on each of said posts to turn about a vertical axis, a hanger passing axially through each of said worm-wheels and having a screw-threaded engagement therewith, a worm meshing with said worm-wheels and operating to turn the same in unison, and suspenders pivotally connected at their upper ends to said hangers and at their lower ends to the shake-frame.

9. In a paper-making machine, a shake-frame, having longitudinally-extended beams forming stiffening members, shake-rails separate from the said beams and supported thereon, lower cords stretching the length of the shake-frame, and struts between said lower cords and beams.

10. In a paper-making machine, a shake-frame, having longitudinally-extending I-beams on either side thereof, shake-rails on said I-beams, a breast-roll frame at the front end of the shake-rails, and to which the shake-rails are connected, lower cords connecting the lower end of said breast-roll frame and the rear end of the I-beam, struts between the I-beams and lower cords, whereby the shake-frame is trussed, and means to suspend the front end of said shake-frame from an overhead support for vertical adjustment.

11. In a paper-making machine, a trussed shake-frame having longitudinally-extending I-beams, shake-rails supported thereon, lower cords connected at their end to the ends of the shake-rails, struts between said lower cords and I-beams, means to suspend the front end of the shake-frame from an overhead support, and a stationary save-all independent from said shake-frame.

12. In a paper-making machine, a shake-frame pivotally supported at its rear end on a fixed support, overhead supports for the front end of said shake-frame, and means to suspend said front end from said supports, said shake-frame comprising longitudinally-extending I-beams, shake-rails thereon, lower cords connecting the ends of the shake-rails, and struts between said lower cords and I-beams.

13. In a paper-making machine, a trussed shake-frame comprising in its structure longitudinally-extending stiffening members on either side thereof, and shake-rails supported on said stiffening members, said shake-rails being separate from but rigidly secured to the stiffening members.

14. In a paper-making machine, a trussed shake-frame, comprising in its structure longitudinally-extending stiffening members on either side thereof, shake-rails supported on said stiffening members, said shake-rails being separate from but rigidly secured to the stiffening members, and brackets carried by the stiffening members for supporting the table-rolls.

In testimony whereof we have signed our names to this specification in the presence of two subscribing witnesses.

CHARLES E. BARRETT.
JOHN E. HORNE.

Witnesses:
GEO. M. LITTLEFIELD,
CALEB SAUNDERS.

1048

E. F. MILLARD.

56

PULP FEEDING DEVICE FOR PAPER MACHINES.

APPLICATION FILED APR. 15, 1907.

933,656.

Patented Sept. 7, 1909.

2 SHEETS—SHEET 1.

Fig. 1.

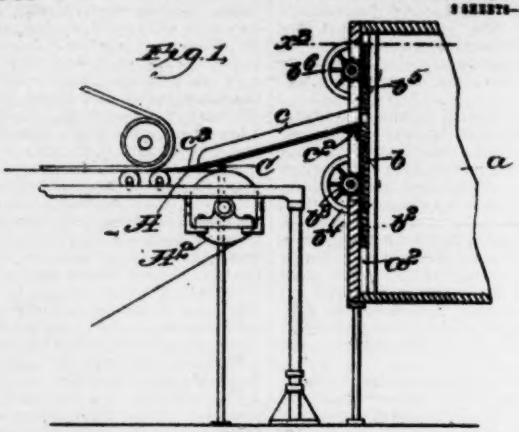

Fig. 2.

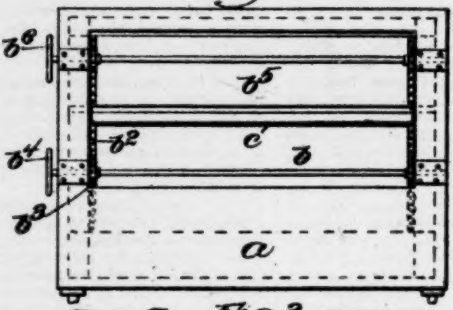

Fig. 3.

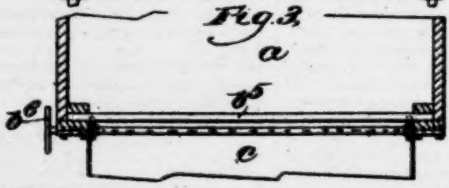

Witnesses:
C. F. Williams.
Jas. J. Maloney.

Inventor,
Edward F. Millard.
by J. P. and A. G. Sinnamon
Attys

10⅓9

E. F. MILLARD.

PULP FEEDING DEVICE FOR PAPER MACHINES. 58

APPLICATION FILED APR. 15, 1907.

933,656. Patented Sept. 7, 1909.

2 SHEETS—SHEET 2.

Fig 4.

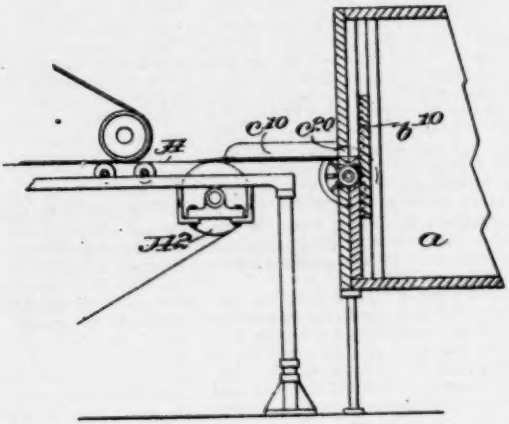

Witnesses.
G. N. Williams
Jas. J. Maloney.

Inventor:
Edward F. Millard.
by J. Paul M. Swinnerton
Atty.

1059,871

UNITED STATES PATENT OFFICE.

EDWARD F. MILLARD, OF WATERTOWN, MASSACHUSETTS.

PULP-FEEDING DEVICE FOR PAPER-MACHINES.

933,656. Specification of Letters Patent. Patented Sept. 7, 1909.

Application filed April 15, 1907. Serial No. 368,201.

To all whom it may concern:

Be it known that I, EDWARD F. MILLARD, a citizen of the United States, residing in Watertown, in the county of Middlesex and State of Massachusetts, have invented an Improvement in Pulp-Feeding Devices for Paper-Machines, of which the following description, in connection with the accompanying drawings, is a specification, like letters on the drawings representing like parts.

The present invention relates to a Fourdrinier paper machine, and is embodied in novel means for feeding the liquid pulp to the wire part of the machine, the purpose of the invention being to give the pulp a certain velocity as nearly as possible equal to the velocity of movement of the wire, so that the pulp and the wire are in effect stationary relative to each other, although they travel together. This results in the draining of the pulp without any dragging movement of the wire against the pulp to disturb the fibers, the result being the formation of a better matte, without departing from the continuous process provided for by the use of the machine.

In carrying out the invention, the machine is provided with means for causing the pulp to flow or travel from the supply tank to the wire, and may also be provided, as a secondary feature, with means for regulating the velocity of flow of the pulp and causing it to approximately equal the velocity of movement of the wire. The velocity of feed movement may be accomplished by providing the feed tank, in which the pulp is kept stirred up, with an inclined runway which extends from the tank to a point over the wire where it leaves the breast roll of the machine, or with means for causing the pulp to flow under a head or pressure. For purposes of adjustment, the runway may be arranged so as to vary the inclination thereof, or a vertically adjustable dam may be employed to vary the head; or the head or pressure may be varied by any suitable expedient.

Figure 1 is a side elevation, partly in section, of the breast roll end of a Fourdrinier paper machine provided with feeding mechanism constructed in accordance with the invention; Fig. 2 is a front elevation of the feed mechanism, the trough or runway being shown in section; Fig. 3 is a horizontal section on the line x^3 of Fig. 1; and Fig 4 is a view similar to Fig. 1, showing a modification.

In operating a Fourdrinier machine, the liquid pulp is flowed on to the surface of the traveling wire A at a point adjacent to the breast roll A^2 over which the wire travels, it being customary to cause the pulp to empty from a tank, the surface level and overflow point of which are substantially on a level with the wire A. The pulp in this case is substantially stationary, that is to say, has no initial velocity, when it is delivered to the wire, and is dragged along by the wire in the draining and drying process.

In order to give the pulp an initial velocity of flow, so that it tends to travel with the wire, instead of being dragged along thereby, the machine is provided, in accordance with this invention, with means for giving the pulp such initial velocity, for example, by providing the apparatus with a gravity feed such as an inclined trough down which the pulp flows to the wire.

In the construction shown in Figs. 1 to 3, the tank c, which is kept supplied with a quantity of pulp, is provided with a vertically movable dam b provided at the top with a runway or trough c extending from the top of the dam or the overflow down to the surface of the wire A. The pulp overflowing from the tank, therefore, and running down the trough, will acquire a certain velocity which may be regulated by varying the inclination of the trough, until it substantially equals the velocity of movement of the wire A. In the construction shown, the trough c is hinged at c^2 to the top of the dam b, and is provided at its lower end with a flexible apron c^3 which lies in contact with the wire A so as to permit the pulp to distribute itself evenly over the wire.

To vary the inclination of the trough c, the dam b is vertically movable, being shown as provided with a rack b^3 in mesh with the pinion b^4 arranged to be operated by a hand wheel b^5. The dam may be fitted into the wall of the tank in any suitable way, the tank being herein shown as formed with recesses a^2 at opposite sides in which the opposite ends of the dam b fit with sufficient accuracy to prevent leakage. It is sometimes desirable to draw off the pulp from a level below the surface thereof, so as to prevent any foamy substance floating on top from reaching the wire, and a supplemental ad-

justable cut-off b^5 operated for adjustment by a hand-wheel b^6, is herein shown for the purpose of regulating the size of the opening. The trough c is shown as supported at its lower end upon a stationary cross-member C, so that the trough will not be shaken by the vibratory movement of the shake-rails. The desired end may be obtained without the intervention of the inclined trough by otherwise providing for flow of pulp under pressure or head. As shown, for example, in Fig. 4, the liquid may be maintained in the tank at a level above the level of the wire, by means of the dam b^{10}, which projects above the opening c^{10} to the horizontal trough c^{11}, so that the liquid pulp is delivered under a head determined by the height of the top of the dam b^{10}, which may, as indicated, be adjustable. It is obvious, moreover, that by regulating the size of the opening, shown in Fig. 1, between the dams b and b^5, the outlet capacity of the tank may be restricted with relation to the inlet capacity, so that any desired head may be retained without using the inclined trough.

Claims.

1. The combination with the wire part of a Fourdrinier paper machine; of a feed tank; a substantially flat delivery trough leading from said tank to said wire part, and substantially the same in width as said wire part, to deliver a thin layer of material to the traveling surface of said wire part; and a vertically adjustable delivery outlet from the tank above the level of the wire part, whereby the thin layer of material is delivered in the desired quantity with a velocity of flow to correspond substantially with the velocity of movement of the wire part.

2. In the art of making paper, the process herein described of fixing the formation of the sheet at the breastroll end of the paper making wire, which consists in delivering the stock to the wire at a speed corresponding to the speed of the wire, so that the stock moves with the wire at the start by momentum, permitting the fibers to settle on the wire.

3. In the art of making paper, the process herein described of fixing the formation of the sheet at the breastroll end of the paper making wire, which consists in delivering the stock to the wire at a speed corresponding to the speed of the wire, so that the stock moves with the wire at the start by momentum, permitting the fibers to settle on the wire, and thereafter, as the formation of the sheet gradually becomes fixed on the wire, gradually imparting motion to the stock by the wire, without interrupting formation of the sheet.

In testimony whereof, I have signed my name to this specification in the presence of two subscribing witnesses.

EDWARD F. MILLARD.

Witnesses:
M. E. Coveney,
Jas. J. Maloney.

1052

No. 742,239. PATENTED OCT. 27, 1903.

T. H. SAVERY.

PAPER MAKING MACHINE.

APPLICATION FILED MAR. 6, 1903.

62

NO MODEL. 2 SHEETS—SHEET 1.

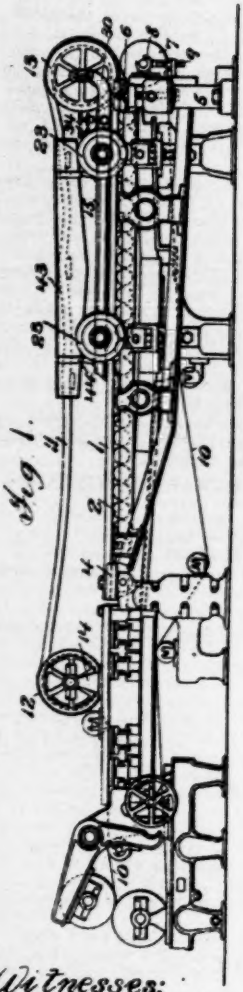

Fig. 1.

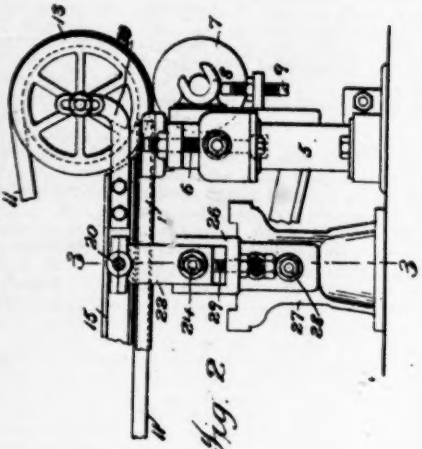

Fig. 2

Witnesses:
W. H. Kennedy.
J. A. Graves

Inventor:
Thomas H. Savery
by Philip Lawrence Rice & Kennedy
Attys.

No. 742,239. PATENTED OCT. 27, 1903.

T. H. SAVERY.

PAPER MAKING MACHINE.

APPLICATION FILED MAR. 6, 1903.

64

NO MODEL. 2 SHEETS—SHEET 2.

Fig. 3

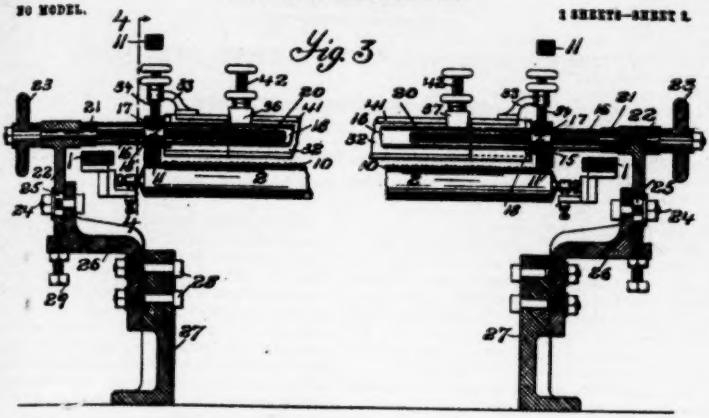

Fig. 4

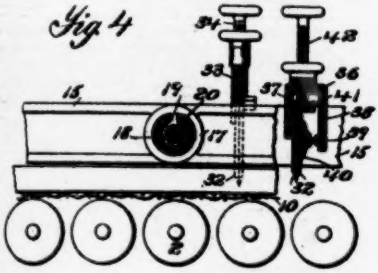

Fig. 5

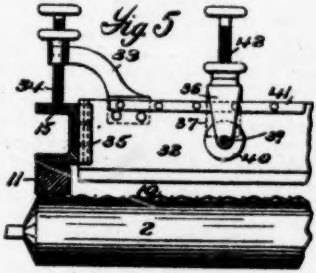

Fig. 6

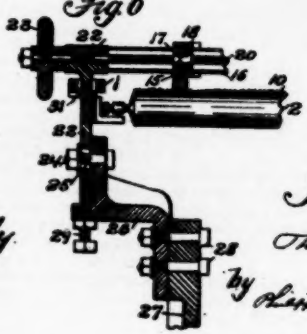

Fig. 7

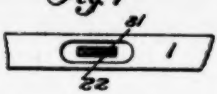

Witnesses:
W. H. Kennedy
J. F. Traver

Inventor:
Thomas H. Savery
by Philip Dunger Rice & Kennedy
Attys.

1054

No. 742,880. Patented October 27, 1903.

UNITED STATES PATENT OFFICE.

THOMAS H. SAVERY, OF WILMINGTON, DELAWARE.

PAPER-MAKING MACHINE.

SPECIFICATION forming part of Letters Patent No. 742,880, dated October 27, 1903.

Application filed March 6, 1903. Serial No. 146,442. (No model.)

To all whom it may concern:

Be it known that I, THOMAS H. SAVERY, a citizen of the United States, residing at Wilmington, county of Newcastle, and State of Delaware, have invented certain new and useful Improvements in Paper-Making Machines, fully described and represented in the following specification and the accompanying drawings, forming a part of the same.

This invention relates to certain improvements in paper-making machines.

In paper-making machines of the Fourdrinier type as now usually constructed the stream or web of pulp on the making-wire is controlled by the deckle-straps and slices. These slices, the pulleys which carry the deckle-straps at the end of the machine at which the pulp enters, and the parts coöperating with these controlling devices—such, for instance, as the wash-troughs for the deckle-straps—are carried by the shaking-section. This shaking-section is vibrated laterally at a high rate of speed, usually at about two hundred and fifty times a minute, and it follows, of course, that the slices, pulleys, &c., are moved with it. The weight of these controlling devices, however, is very considerable, and, not only is no useful function subserved by moving them, but the work incident to moving the shaking-section, as well as the wear and tear on the machine, is increased by their movement.

It is the object of this invention to produce an improved paper-making machine of the Fourdrinier type in which the controlling devices for the web or stream of pulp shall be mounted independently of the shaking-section, or as not to move therewith.

With this and other objects in view the invention consists in certain constructions and in certain parts, improvements, and combinations, as will be hereinafter fully described and then specifically pointed out in the claims hereunto appended.

In the accompanying drawings, Figure 1 is a side elevation of a paper-making machine of the Fourdrinier type embodying the invention. Fig. 2 is an enlarged detail elevation of the right-hand end of the machine shown in Fig. 1. Fig. 3 is a sectional elevation on the line 3 3 of Fig. 2. Figs. 4, 5, 6, and 7 are detail views.

Referring to the drawings, which illustrate a well-known type of Fourdrinier paper-making machine, 1 indicates the shaking-section, the side rails of which serve to support the usual table-rolls 2. While the shaking-section may be mounted and operated in any desired manner, it will preferably be supported in the manner set forth in my patent No. 675,072, granted May 28, 1901—that is to say, the ends of the side rails nearest the couch-rolls are pivotally connected to pivot-blocks 4, mounted in the frame, so that the shaking-section is capacitated not only for the shaking movement, but also for vertical adjustment. The opposite ends of the shaking-section rails will also preferably be adjustably supported on stiff springs 5, all as particularly set forth in the patent before referred to, the vertical adjustment being effected through suitable screws 6. The breast-roll, which is marked 7, is suitably supported in bearings 8, connected to the shaking-section, the adjustment of these bearings being determined by screws 9. The means for operating the shaking-section are not shown, inasmuch as they have no bearing on the present invention; but they may be of the character described in the patent before referred to. It may be here remarked that while the construction of shaking-section here illustrated and specifically described is the patent above referred to forms a convenient construction for illustrating the invention the invention may be used with any form of Fourdrinier paper-making machine employing a shaking-section.

The devices for controlling the width of the stream or web of pulp on the making-wire 10, which wire may be constructed, mounted, and operated in the ordinary manner, consist of the usual deckle-straps 11, said straps being supported, as is common, on a pair of pulleys 12 at the end of the machine nearest the couch-rolls and on a pair of pulleys 13 at the breast-roll end of the machine. The pulleys 13 are supported by standards 14, which, as usual in such constructions, are mounted on a stationary part of the machine. In the constructions heretofore known to me the pulleys 13—that is, the pulleys which support the deckle-straps at the breast-roll end of the machine—have been mounted so that they have vibrated with the shaking-section. According to the

1055

present invention these pulleys will be mounted so that they will not move when the shaking-section is vibrated. While the construction by which the deckle-strap pulleys 13 are mounted may be varied within wide limits, in the construction shown there is provided a frame which includes a pair of side bars 15, these side bars being supported and connected by pipes 16. These pipes 16 have slots in their tops and extend through openings formed in bosses 17 in the bars 15. These bosses 17 carry nuts 18, which are connected by webs 19 to the bosses, these webs passing through and lying in the slots in the pipes. Engaging with these nuts 18 are screws 20, said screws passing through collars 21 at the ends of the pipes and being then in the construction shown supported by brackets or standards 22. Outside these brackets or standards 22 the screws are provided with hand-wheels 23. These standards or brackets 22 are adjustably connected in the construction shown by means of bolts 24, which pass through slots 25 in the standards to angle-brackets 26. These brackets 26 are connected to standards 27 by means of screws 28 or in any other suitable manner, these standards 27 forming a part of the main frame of the machine. Set-screws 29 are or may be provided to assist in adjusting and to hold in adjustment the standards 22.

In the construction shown the side bars 15 carry brackets 30, in which brackets are journaled the deckle-pulleys 13, before referred to. With the construction as before described it is apparent that by turning the hand-wheels 23 the screws 20, engaging with the nuts 18, will cause the side bars 15 to be moved toward or away from the edges of making-wire 10, thus positioning the deckle-straps and determining the width of the stream or web of pulp on the making-wire.

The standards 22, before referred to, may in some instances be located outside the side rails of the shaking-section, this construction being illustrated in Figs. 2 and 3. In some instances, however, it may be desirable to provide the side rails of the shaking-section with slots 31 and allow the standards 22 to pass through said slots, this construction being illustrated in Figs. 6 and 7.

In addition to mounting the deckle-pulleys so that they will not receive motion from the shaking-section in the preferred construction the slices will also be mounted so as not to receive motion from the shaking-section. While the slices may be of any desired construction and mounted in any suitable manner to effect this result, in the construction shown each slice is composed of two overlapping blades 32, these overlapping blades having secured to them near their ends brackets 33, through which are tapped set-screws 34, said set-screws resting on the bars 15, before described. These bars 15 are provided with ways 35, in which the slices move when they are vertically adjusted, said vertical adjustment being effected by the screws 34. The blades 32 are held together by clamps, which consist of blocks 36, having downwardly-projecting legs 37 38, the legs 37 being secured to the blades 32 and the legs 38 being provided with tapped openings, through which work the screws 39, said screws serving to force and hold clamping-pads 40 against the blades 32, which are not connected with the legs 37. One of the blades 32 is provided with a rib or side extension 41, against which bears a screw 42, which is tapped through an opening in the block 36. With the construction before described it will be seen that when the side bars 15 are adjusted in or out by turning the hand-wheels 23 the overlapping blades which form the slices will be caused to move in or out.

The machine shown is provided with cleaning-troughs 43 for the deckle-straps, which may be of any usual construction, and these troughs are also mounted, so as not to be affected by the movement of the shaking-section. While the troughs may be mounted in any desired manner, in the preferred construction they will also be carried by the side bars 15, before referred to, and to this end the bars are provided with upwardly-extending forked extensions or yokes 44, in which the troughs are located.

Changes and variations may be made in the construction by which the invention is carried into effect. The invention is not, therefore, to be limited to the precise details of construction herein before described.

What is claimed is—

1. In a paper-making machine, the combination with the making-wire and the shaking-section, of devices for controlling the pulp on the wire, and means independent of the shaking-section for supporting said devices, whereby the shaking-section may be moved without moving the controlling devices, substantially as described.

2. In a paper-making machine, the combination with the making-wire and the shaking-section, of the deckle-pulleys, and supporting means therefor independent of the shaking-section whereby the shaking-section may be moved without moving the deckle-pulleys, substantially as described.

3. In a paper-making machine, the combination with the making-wire and the shaking-section, of the deckle-pulleys and the slices, of means independent of the shaking-section for supporting said deckle-pulleys and slices, whereby the shaking-section may be moved without moving the deckle-pulleys and slices, substantially as described.

4. In a paper-making machine, the combination with the making-wire and the shaking-section, of a frame, deckle-pulleys on the frame, slices also supported on the frame, and means independent of the shaking-section for supporting said frame, substantially as described.

5. In a paper-making machine, the combi-

nation with the making-wire and shaking-section, of a main frame on which the shaking-section is supported and moved, a second frame located above the shaking-section, deckle-pulleys, slices and wash-troughs carried on said second frame, and standards connected to the main frame beneath the shaking-section and operating to support the second frame, whereby the shaking-section may be moved without moving the second frame, substantially as described.

In testimony whereof I have hereunto set my hand in the presence of two subscribing witnesses.

THOMAS H. SAVERY.

Witnesses:
T. F. KEHOE,
A. WHITE.

1057

No. 684,081. Patented Oct. 8, 1901.

J. W. MOORE & J. A. WHITE.

PAPER MAKING MACHINE.

(Application filed Dec. 8, 1900.)

70

(No Model.) 2 Sheets—Sheet 1.

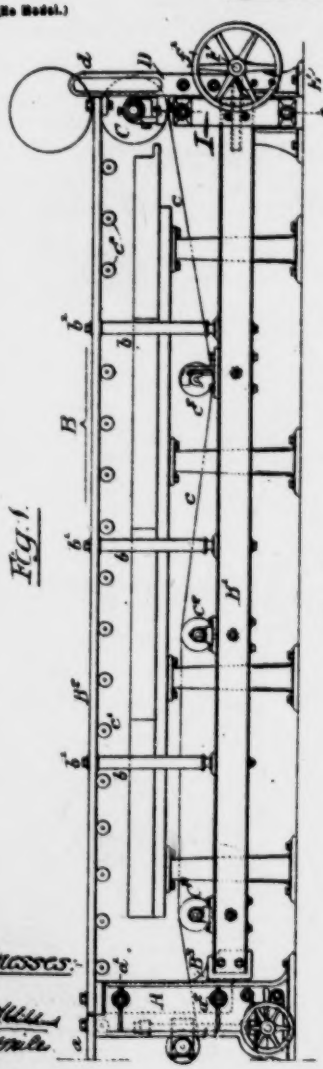

Fig. 1.

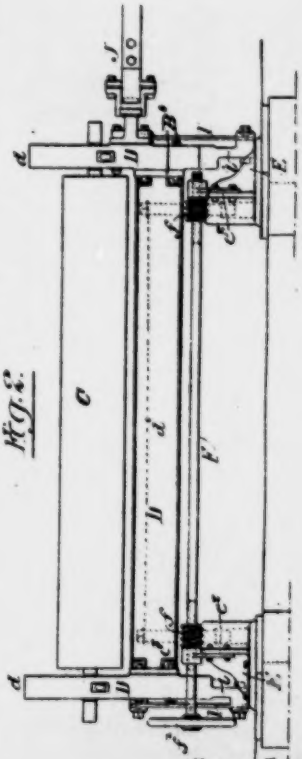

Fig. 2.

Witnesses:-

L. White

W. Whitehill

Inventors:

John W. Moore.

Joseph A. White.

by their Attorneys:

Hanson & Hanson

No. 684,681. Patented Oct. 8, 1901.

J. W. MOORE & J. A. WHITE. 72

PAPER MAKING MACHINE.

(Application filed Dec. 6, 1900.)

(No Model.) 2 Sheets—Sheet 2.

Fig. 3

Fig. 7.

Fig. 6.

Fig. 5.

Fig. 4.

Witnesses:

Inventors:
John W. Moore.
Joseph A. White.
by their Attorneys
Howson & Howson

UNITED STATES PATENT OFFICE.

JOHN W. MOORE AND JOSEPH ATWOOD WHITE, OF PHILADELPHIA, PENNSYLVANIA, ASSIGNORS TO CHARLES L. HAMILTON, OF SAME PLACE.

PAPER-MAKING MACHINE.

SPECIFICATION forming part of Letters Patent No. 684,081, dated October 8, 1901.

Application filed December 8, 1899. Serial No. 739,675. (No model.)

To all whom it may concern:

Be it known that we, JOHN W. MOORE and JOSEPH ATWOOD WHITE, citizens of the United States, and residents of Philadelphia, Pennsylvania, have invented certain Improvements in Paper-Making Machines, of which the following is a specification.

Our invention relates to certain improvements in Fourdrinier paper-making machines in which the pulp is fed upon a movable apron, which is agitated, allowing the water to pass away from the pulp and the pulp to form in a thin layer on the apron.

The object of our invention is to provide means whereby the shake-frame is readily and accurately adjusted and locked in the adjusted position.

In the accompanying drawings, Figure 1 is a side view of sufficient of a Fourdrinier paper-making machine to illustrate our invention. Fig. 2 is an end view. Fig. 3 is an enlarged transverse sectional view of the forward end of the machine. Fig. 4 is a section on the line 4 4, Fig. 3. Figs. 5 and 6 are views of details of the invention, and Fig. 7 is a view of a modification.

A is a standard which may form part of the fixed frame of the machine. Attached to this standard is the fixed rail *a*.

B is the shake-frame, consisting of lower supporting-beams B' and the upper rails B². These rails are attached to a frame B³, Fig. 4, which is secured to the standard A and are also connected to an end frame D, consisting of two upright members *d d* and a transverse member *d'*. The supporting-beam and rails are connected at intervals by posts *b* and tie-bolts *b'*. The end frame B³ is rigidly connected to the supporting-beams B' and is hung to the standard A by a pivot-bolt *a'*. The clamp-bolt *a²* passes through a slot *b²* in the end frame B³ and secures the lower portion of the frame to the standard. This bolt may be adjusted sufficiently to give it a rest fit, so as to allow for the vertical adjustment of the forward end of the shake-frame. In some cases, however, it may be tightened and the nut backed off when it is required to adjust the frame.

C is the endless making wire or apron, which passes around a breast-roll C over rolls *c'* to the couch-rolls and returning passes the guide-rolls *c²*. The supporting-rolls *c'* are adapted to bearings carried by the rails B², and the lower rolls *c²* are mounted in bearings on the supporting-beams B'.

E E are two pedestals mounted on a suitable foundation, and adapted to each pedestal is a nut E', on which is a worm-wheel *e*. This nut is mounted within the pedestal, and the pedestal is provided with a bushing *e'*, preferably of graphite or other suitable material. On the bracket *e²* of each pedestal is a bearing for the transverse shaft F, having worms *f f*, which mesh with the worm-wheels *e e*. The shaft F is provided with a suitable hand-wheel *f'* on one side of the machine, so that on turning this shaft the nuts E' will be turned in unison. We preferably mount one of the brackets *e²* adjustably on its pedestal, so that the worm *f* on the shaft F at that bracket can be thrown out of gear with its wheel when it is desired to adjust one side of the frame only, and the far side of the frame can be raised and lowered by turning the shaft, while the near side can be raised and lowered by turning the disengaged wheel. In some instances the shaft F may be adapted to an eccentric bearing on one of the brackets *e²*, as shown in Fig. 7, to accomplish the purpose set forth above.

G is a normally stationary end or cross-frame structure having screw-studs *g g*, adapted to bearings *g'* in the frame. The lower portion of each stud is screw-threaded and adapted to its nut E'. Each stud is held in the fixed position in its bearing *g'* by a set-screw *g²* and is preferably provided with a head *g³*, projecting above the cross-frame G, so that if it is desired to turn one or other of the studs the set-screw *g²* is backed off, and by placing a wrench on the head of the stud and turning it it will turn in the nut and raise or lower one side of the frame, if found more convenient than disengaging the worm-wheel, so that it will be seen that the entire frame can be adjusted in unison or either side of the frame adjusted, as desired.

The screw-studs *g g* need not necessarily extend through the frame G, as they may simply be seated in sockets in the frame, as shown in Fig. 7, and each stud may be pro-

vided with a many-sided enlargement, by which it can be turned.

Connecting each end of the frame G with brackets i on the shake-frame are spring suspension-plates I, so that the forward end of the shake-frame is suspended by the spring-plates. J is a rod attached to the shake-frame. This rod is connected to any suitable mechanism for giving the shake-frame a lateral motion.

We claim as our invention—

1. The combination of a fixed frame, a shake-frame connected at one end to the fixed frame, a cross-frame and a flexible connecting-piece between said cross-frame and the forward end of the shake-frame, pedestals, a nut revolubly supported on each pedestal and a screw passing through said nut and extending into the cross-frame whereby the shake-frame can be raised and lowered, substantially as described.

2. The combination of a fixed frame, a shake-frame connected to the fixed frame, a cross-frame to which the shake-frame is connected, screw-studs on the cross-frame, pedestals, nuts carried by said pedestals and adapted to the screw-studs, means operative upon the nuts for raising or lowering the screw-studs and other means for turning the said studs, substantially as described.

3. The combination of a fixed frame, a shake-frame connected thereto, a cross-frame at the forward end of the shake-frame and connected thereto, studs on the cross-frame, pedestals, nuts on the pedestals adapted to the studs, worm-wheels on the nuts, a cross-shaft, worms thereon engaging with the worm-wheels so that on turning the cross-shaft the nuts will be turned in unison and will raise or lower the end of the shake-frame, with means for moving one of the worms out of engagement with the corresponding worm-wheel, substantially as described.

4. The combination of a fixed frame, a shake-frame attached thereto, a cross-frame connected to the forward end of the shake-frame, screw-studs adapted to bearings in the cross-frame, means for securing the studs to the bearings, pedestals, nuts carrying worm-wheels, mounted on the pedestals and adapted to the screw-threads, and means for turning the said worm-wheels in unison, the screw-studs being constructed to be turned in the nuts independently of the worm-wheels, substantially as described.

5. The combination of a fixed standard, a shake-frame pivoted thereto at one end, said frame consisting of upper and lower rails connected by an end frame, a cross-frame structure at the other end of the shake-frame extending across said end having flexible pieces connecting it with said shake-frame and means on the cross-frame for raising and lowering the end of the shake-frame, substantially as described.

6. The combination of a standard, a shake-frame secured thereto, a cross-frame from which the opposite end of the shake-frame is suspended, pedestals, nut-and-screw connection between the pedestals and cross-frame, worm-wheels on the screws, a cross-shaft, worms thereon, bearings for said shaft, one of said bearings being adjustable so that one of said worms can be thrown out of gear with its worm-wheel, substantially as described.

7. The combination of a fixed standard, a fixed frame and a shake-frame, the latter consisting of lower supporting-beams, upper rails, and frames at each end of the machine connecting the beams to the rails, the said shake-frame being pivoted at one end to the standard and suspended from said fixed frame at the opposite end, substantially as described.

8. The combination in a paper-making machine, of a fixed frame A, a shake-frame B connected at one end to the fixed frame, pedestals E E, a stationary cross-frame G extending across the end of the machine, said frame being mounted on said pedestals, and connections between the cross-frame and the free end of the shake-frame, whereby the shake-frame may be agitated, substantially as described.

9. The combination in a paper-making machine, of a fixed frame, a shake-frame connected thereto at one end, pedestals having a stationary cross-frame mounted on them, connections between the cross-frame and the free end of the shake-frame, and means between the pedestals and the cross-frame for varying the height of the said free end of the shake-frame, substantially as described.

10. In a paper-making machine the combination of a fixed frame, a shake-frame connected thereto at one end, a normally stationary end frame carried on pedestals and independent of all other parts of the machine, means for suspending the free end of the shake-frame from said end frame and means for adjusting the vertical height of said end frame and hence that of the shake-frame, substantially as described.

In testimony whereof we have signed our names to this specification in the presence of two subscribing witnesses.

JOHN W. MOORE.
JOSEPH ATWOOD WHITE.

Witnesses:
FRANK B. JAQUETT,
SHELTON N. HIBBS.

PLAINTIFF'S EXHIBIT DAVIDSON & KITCHIN PATENT NO. 14193 OF 1895.

No. 14193 A. D. 1895.

Date of Application, 25th July, 1895.

Complete Specification Left 24th Apr., 1896. Accepted 30th May, 1896.

Provisional Specification.

Improvements in Paper Making Machines.

We, John Davidson, of 23, Upper Thames Street, in the City of London, and Cochrane Kitchen, of Mugie Moss Paper Works, near Aberdeen, Paper Makers, do hereby declare the nature of this invention to be as follows:

The object of this invention is to enable the machineman to run his machine at full speed and to produce a close and perfect sheet of paper even when changing from a pulp which parts with its water freely to a pulp which does not; or from a thick to thin sheet:—and this without stopping the machine.

For this purpose the bearings of the breast roll and of the small rolls supporting the gauze between the feed and the suction boxes in place of being fixed as is usual are carried on a frame pivotted at its forward end and provided at the rear end with means for raising and lowering it. By this means the height of the breast roll relatively to the level of the gauze at the suction boxes can be varied so varying the depth of the stream of pulp flowing on to the gauze.

Dated this 18th day of July, 1895.

JOHN DAVIDSON.
COCHRANE KITCHEN.

Complete Specification.

Improvements in Paper Making Machines.

We, John Davidson, of 23, Upper Thames Street, in the City of London, and Cochrane Kitchen, of Mugie Moss Paper Mills, near Aberdeen, Paper Makers, do hereby declare the nature of this invention and in what manner the same is to be performed to be particularly described and ascertained in and by the following statement:

The object of this invention is to enable the machineman to run his machine at full speed and to produce a close and perfect sheet of paper even when changing from a pulp which parts with its water freely to a pulp which does not; or from a thick to a thin sheet:—and this without stopping the machine.

For this purpose the bearings of the breast roll and of the small rolls supporting the gauze between the feed and the suction boxes in

place of being fixed as is usual are carried on a frame pivotted at its forward end and provided at the rear end with means for raising and lowering it. By this means the height of the breast roll relatively to the level of the gauze at the suction boxes can be varied so varying the depth of the stream of pulp flowing on to the gauze.

Description of the Drawings.

Figure 1 is a side elevation and Figue 2 a plan of the feed end of a Fourdrinier machine arranged according to our invention.

a is the feed trough and *b* the breast roll. *c* are the small rollers supporting the gauze between the feed and the suction boxes, the latter being to the right of the drawings and not shewn. *d* are the rollers above and below which alternately the return branch of the gauze passes. All these parts are of ordinary and well known construction, and require no further description.

e is a frame pivotted at *f* and supporting the frame carrying the above mentioned parts (other than the feed trough) by adjustable standards *g*. The other end of the frame *e* is supported on screws *h* whose upper ends carry bevel wheel *j* gearing with the bevel pinions *k* on the horizontal shaft *l* which carries the hand wheel *m* so that by turning the latter the frame *e* and other parts are raised or lowered.

Having now particularly described and ascertained the nature of our said invention and in what manner the same is to be performed, we declare that what we claim is:

1. Supporting the rolls *b* and *c* on a pivotted frame.

2. Paper making machines substantially as described and shown in the drawings.

Dated this 9th day of April, 1896.

JOHN DAVIDSON.
C. KITCHEN.

(Here follows folded diagram marked page 77.)

[This Drawing is a reproduction of the Original on a reduced scale.]

Fig. 1.

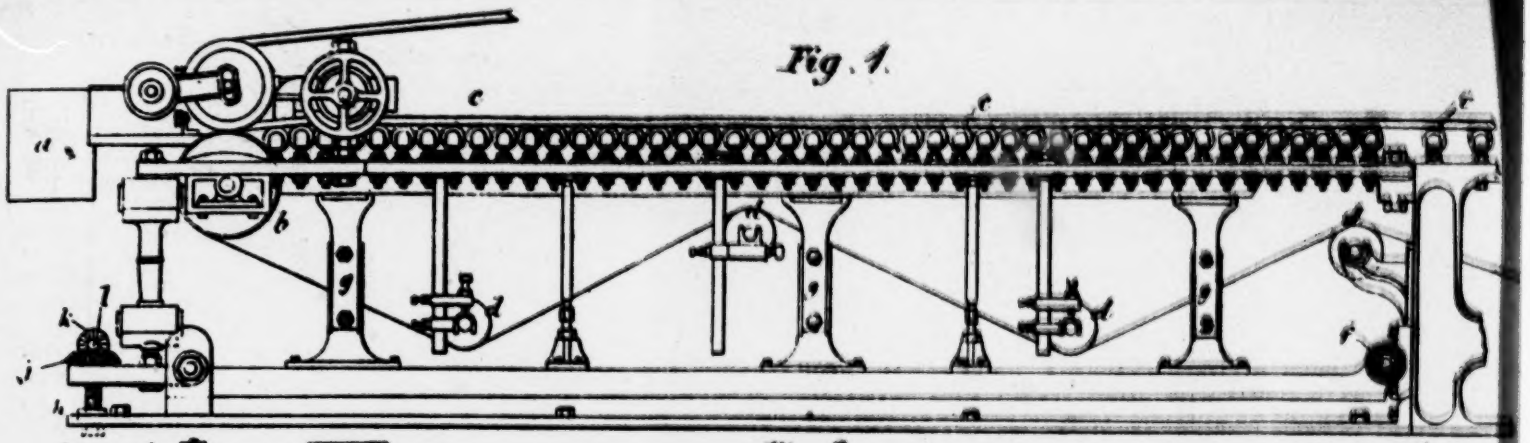

Fig. 2.

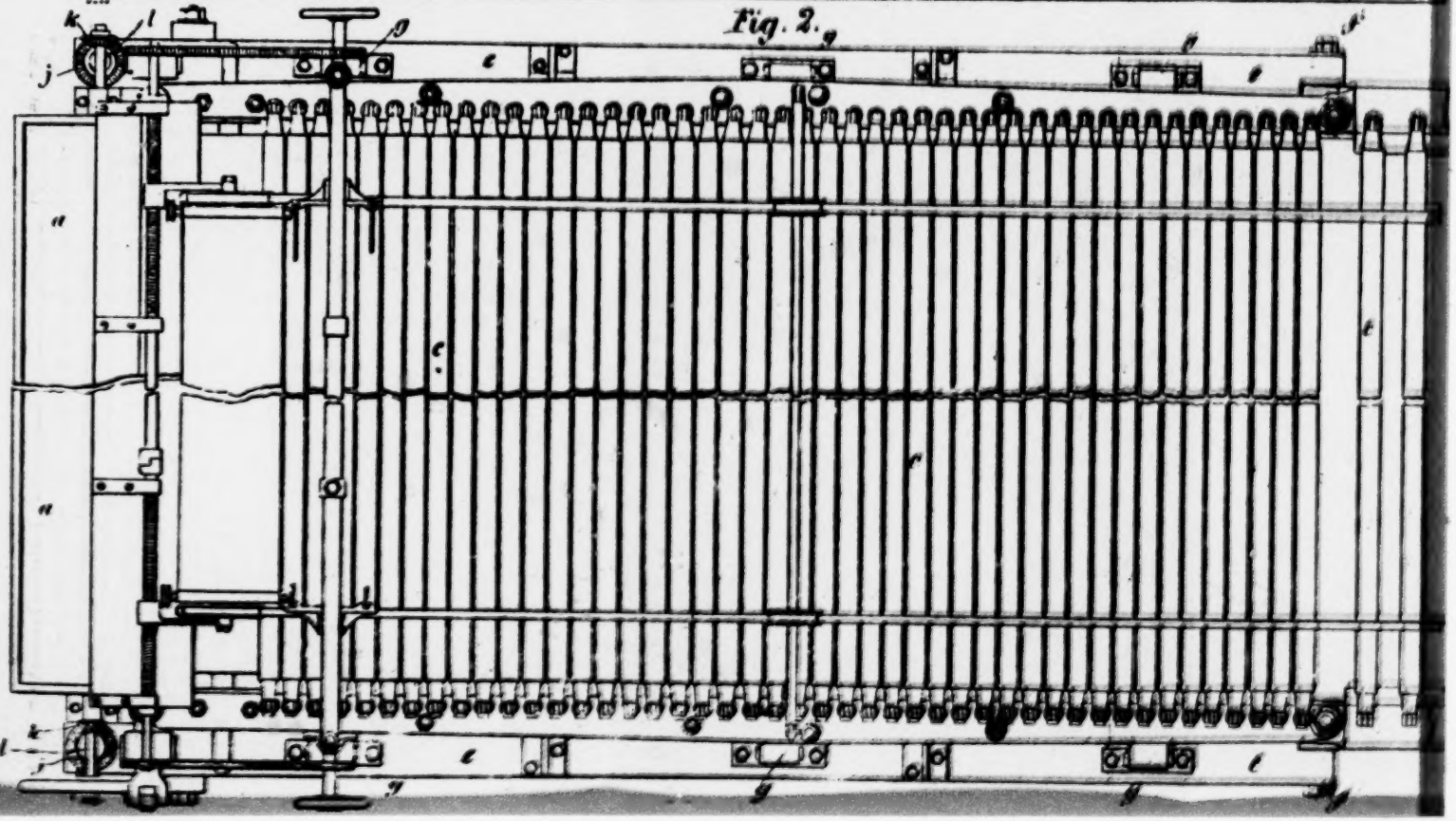

PLAINTIFF'S EXHIBIT JOHNSON PATENT No. 3612 OF 1900.

No. 3612 A. D. 1900.

Date of Application, 23rd Feb., 1900. Accepted, 24th Mar., 1900.

Complete Specification.

Improvements in Paper-making Machines.

I, James Yate Johnson, of 47, Lincoln's Inn Fields, in the County of London, Gentlemen, do hereby declare the nature of this invention (which has been communicated to me from abroad by Charles Lacey Hamilton, of 264, West Walnut Lane, Germantown, Philadelphia, Pennsylvania, United States of America, Paper Manufacturer) and in what manner the same is to be performed, to be particularly described and ascertained in and by the following statement:—

This invention relates to Fourdrinier paper making machines, in which the pulp is fed upon a movable apron which is agitated allowing the water to pass away from the pulp and the pulp to form a thin layer on the apron, and the object of this invention is to provide means whereby the shake-frame can be readily and accurately adjusted and locked in the adjusted position.

In the acompanying drawings:—

Figure 1 is a side elevation of sufficient of a Fourdrinier paper-making machine to illustrate the application of this invention thereto; Figure 2 is an end elevation; Figure 3 is an enlarged transverse section of the forward end of the machine; Figure 4 is a section on the line *a*, Figure 3; Figures 5 and 6 illustrate details of the construction according to this invention; and Figure 7 illustrates a modification

1 is a standard, which may form part of the fixed frame of the machine. Attached to this standard is the fixed rail 2. 3 is the shake frame consisting of lower supporting beams 4, and upper rails 5; these rails being attached to a frame 6 (Figure 6) which frame is secured to the standard 1 and the said rails are also connected to an end frame 7 consisting of two upright members 8, 8, and a transverse member 9. The supporting beam and rails are connected at intervals by post 10 and tie-bolts 11.

The frame 6 is rigidly connected to the supporting beams 4 and is hung to the standard 1 by a pivot bolt 12. The clamp bolt 13 passes through a slot 14, in the frame 6, and secures the lower portion of the frame to the standard. This bolt may be adjusted sufficiently to give it a neat fit so as to allow for the vertical adjustment of the forward end of the shake frame. In some cases, however, it may be tightened and the nut loosened when it is required to adjust the frame.

15 is the endless "making wire," or apron, which passes around a breast roll 16, over rolls 17, to the couch rolls and returns past the guide rolls 18. The supporting rolls 17 are mounted in bear-

ings carried by the rails 5 and the lower rolls 18 are mounted in bearings on the supporting beams 4.

19, 19 are two pedestals mounted on a foundation and adapted to each pedestal is a nut 20 (Figure 3) on which is a worm-wheel 21, the said nut being mounted within the pedestal and the pedestal being provided with a bushing 22 of any suitable material but preferably of graphite.

On the bracket 23 of each pedestal is a bearing for the transverse shaft 24, having worms 25, 25, which engage with the worm-wheels 21, 21. The shaft 24, is provided with a hand wheel 26 on one side of the machine, so that, on turning this shaft, the nuts 20, will be turned in unison.

It is preferable to mount one of the brackets 23, adjustably on its pedestal, so that the worm 25, on the shaft 24, at that bracket, can be thrown out of gear with its wheel when it is desired to adjust one side of the frame only, and the far side of the frame can be raised and lowered by turning the shaft while the near side can be raised and lowered by turning the disengaged wheel. If desired the shaft 24 may be adapted to an eccentric bearing on one of the brackets 23, as shewn in Figure 7, to accomplish the aforesaid object.

27 is a cross frame having screw studs 28, 28, mounted in bearings 29 in the frame. The lower portion of each stud is screw threaded and each engages in one of the nuts 20. Each stud is held in the fixed position in its bearing 29, by a set screw 30, and is preferably provided with a head projecting above the cross frame 27, so that if it be desired to turn one, or other, of the studs, the set screw 30 is loosened and then by placing a wrench on the head of the stud and turning it, it will turn in the nut and raise, or lower, one side of the frame, if found more convenient than disengaging the worm wheel. Thus the entire frame can be adjusted in unison, or either side of the frame can be adjusted as desired.

The screw studs 28, 28 need not necessarily extend through the frame 27, as they may simply be seated in sockets in the frame, as shewn in Figure 7, and each stud may be provided with a many sided enlargement, by which it can be turned.

Spring suspension plates 32 connect each end of the frame 27, with brackets 31, on the shake frame so that the forward end of the shake-frame is suspended by the said spring plates. 33 is a rod attached to the shake-frame, the said rod being connected to any suitable mechanism for giving the shake-frame a lateral motion.

Having now particularly described and ascertained the nature of this invention and in what manner the same is to be performed I declare that what I claim is:

1. In paper-making machines the combination of a fixed frame, a shake-frame connected to the said fixed frame at one end, a cross frame from which the forward end of the shake-frame is suspended, and means for raising and lowering the said cross frame substantially as hereinbefore described.

2. In paper-making machines the combination of a fixed frame, a shake-frame connected at one end to the fixed frame, a cross

[This Drawing is a reproduction of the Original on a reduced scale.]

SHEET 1

Fig. 1.

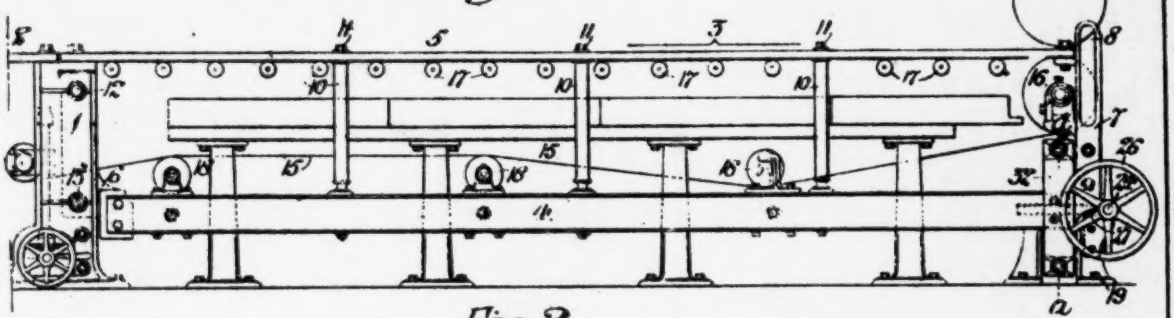

Fig. 2.

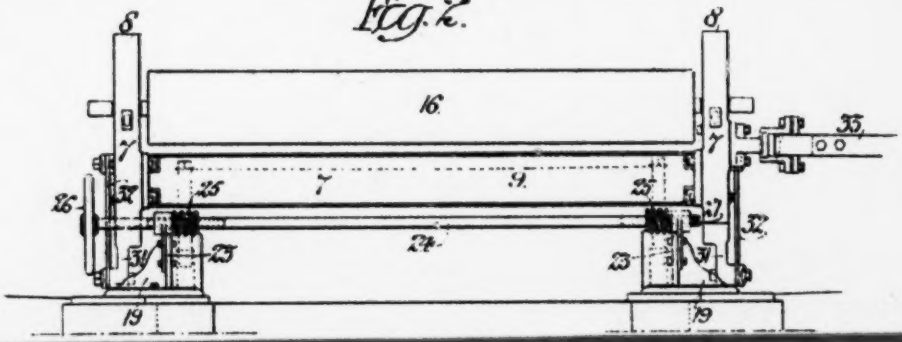

Fig. 3.

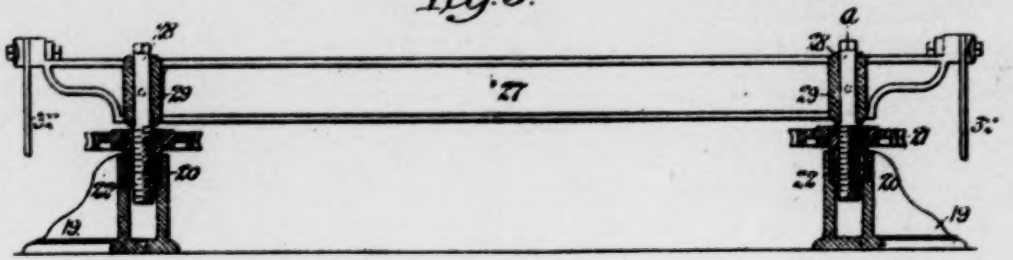

Fig. 4.

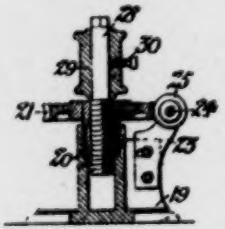

Fig. 5.

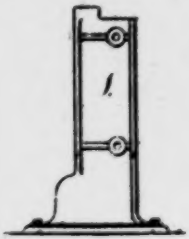

Fig. 6.

Fig. 7.

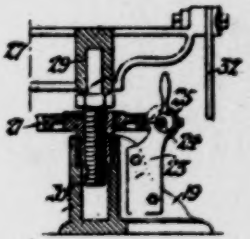

frame to which the forward end of the shake-frame is flexibly connected, pedestals and nut and screw connections between the pedestals and the cross frame, whereby the shake-frame can be raised, or lowered substantially as hereinbefore described.

3. In paper making machines the combination of a fixed frame, a shake-frame connected to the fixed frame, a cross frame to which the shake-frame is connected, screw studs on the cross frame, pedestals, nuts carried by the said pedestals and adapted to the screw studs, and means for turning the nuts, substantially as hereinbefore described.

4. In paper making machines the combination of a fixed frame, a shake frame connected thereto, a cross frame at the forward end of the shake frame and connected thereto, studs on the cross frame, pedestals, nuts on the pedestals adapted to the studs, worm wheels thereon engaging with the worm wheels so that, on turning the cross shaft, the nuts will be turned in unison, and will raise or lower, the end of the shake frame, substantially as hereinbefore described.

5. In paper making machines the combination of a fixed frame, a shake frame attached thereto, a cross frame connected to the forward end of the shake frame, screw studs adapted to bearings in the cross frame, means for securing the studs to the bearings, pedestals, nuts mounted in the pedestals and adapted to the screw threads, and means for turning the nuts in unison, the screw studs being so arranged that they can be turned independently in the nuts, substantially as and for the purpose hereinbefore described.

6. In paper making machines the combination of a fixed standard, a shake frame having upper and lower rails and an end frame pivoted to the standard, and means for raising, or lowering, the forward end of the shake frame, substantially as hereinbefore described.

7. In paper making machines the combination of a standard, a shake frame secured thereto, a cross frame to which the opposite end of the shake frame is suspended pedestals, nut and screw connections between the pedestals and cross frame, worm wheels on the screws, a cross shaft, worms thereon and bearings for the said shaft, one of the said bearings being adjustable so that one of the said worms can be thrown out of gear with the worm wheel, substantially as hereinbefore described.

In paper making machines the combination of a fixed standard a shake frame consisting of lower supporting beams, upper rails, frames connected to the beams and rails at each end, the shake frame being pivoted at one end to the standard, and suspended from a structure at the opposite end, substantially as hereinbefore described.

Dated this 23rd day of February 1900.

JOHNSONS & WILLCOX,
47 Lincoln's Inn Fields, London, W. C., Agents.

(Here follows folded diagram marked page 83.)

PLAINTIFF'S EXHIBIT CRAIG PATENT No. 24,669 OF 1893.

No. 24,669. A. D. 1893.

Date of Application, 22nd Dec., 1893.

Complete Specification Left 21st Sept., 1894. Accepted 27th Oct., 1894.

Provisional Specification.

Improvements in Machinery or Apparatus for Manufacturing Paper.

I James Craig of Bridge Hall Mills Bury in the County of Lancaster, Engineer, do hereby declare the nature of this invention to be as follows:

My invention relates to the construction of the machines employed for manufacturing paper in continuous length, and especially to the wet end, or wire part of such machines, the object of the invention being first to afford facility for the adjustment of the height of the endless wire cloth upon which the pulp is fed, so as to regulate the flow of pulp upon the wire and the quality of paper produced while the machine is in motion. Secondly, to regulate the amount of side shake given to such wire for the purposes of interlocking and consolidating the pulp thereon while the pulp is passing along on the wire.

In the first place instead of supporting the middle part of shake bars by means of supports from the base rails as hitherto done, I provide the under side of the shake bars with stiffening bars and tie-rods to keep them rigid, and mount the shake bar ends upon adjustable standards, the height of which can be regulated at pleasure by means of a vertical screw, actuated by worm gearing and hand wheel, so that the shake bars can be set exactly level or raised or lowered at one end as may be required to regulate the flow of pulp on the wire, and the quality of paper produced while the pulp is passing along on the wire.

Secondly. Instead of hinging the shake connecting rod directly by a fixed pin or stud to the upper end of the shake arm as hitherto practised, I provide the upper end of the shake arm with a curved slot in which is adjustable a sliding block which carries the pin or stud to which the connecting rod from the shake crank pin is hinged. To the adjustable block is fixed a swivelling nut through which passes a screw, which screw is supported at or near the lower end of the curved slot by a swivelling stud, and the screw can be turned by means of a hand wheel and thus the height of the sliding block to which the shake connecting rod is attached, and consequently the amount of motion given to the lower end of the shake arm, and

also the motion imparted to the shake bars can be regulated with the greatest exactitude while the machine is in motion.

Dated this 21st day of December 1893.

GEO. DAVIES & SON,
4 *St. Ann's Square, Manchester,*
Agents for the Applicant.

Complete Specification.

Improvements in Machinery or Apparatus for Manufacturing Paper.

I James Craig of Bridge Hall Mills Bury in the County of Lancaster, Engineer, do hereby declare the nature of this invention and in what manner the same is to be performed to be particularly described and ascertained in and by the following statement:

My invention relates to the construction of machines employed for manufacturing paper in a continuous length, and more especially to the "wet end" or wire part of such machines; the object of the invention being to afford facility for the adjustment of the height of the endless wire cloth upon which the pulp is fed, so as to regulate the flow of pulp upon the wire, and the quality of the paper produced, whilst the machine is in motion.

I would here remark that in the Provisional Specification filed with my application for Letters Patent I described as a second part of my invention an arrangement the object of which was to regulate the amount of "side shake" given to such wire for the purposes of interlocking and consolidating the pulp thereon, while the pulp is passing along on the wire, but I have since found that such arrangement is not so new or useful as I then believed it to be, and I therefore do not intend to describe or claim the same as forming part of my said invention.

The nature of my invention and the manner in which the same is to be performed or carried into practical effect will be clearly understood on reference to the sheet of illustrative drawings hereunto annexed and the following explanation thereof.

Fig. 1 on the drawings is a side elevation (partly in section) of the "wet end" of a paper making machine with my improvements shown as applied thereto.

Fig. 2 is a partial transverse section of the same (through the line A—B Fig. 1) drawn to a larger scale, and Fig. 3 is a detached vertical longitudinal section of a detached portion thereof hereinafter more particularly referred to.

On Fig. 1 *a* is the chest which receives the pulp from the stuff chests, *b* the sieve or strainer, *c* the agitator, and *d* the delivery chamber, the two (chest and delivery chamber) being connected by a flexible pipe or trough *e*, to allow for the shaking motion. *f* is the endless wire or web passing over the rollers *g* and supported by the "shake-bars" *h*.

According to my invention instead of supporting the middle part of these "shake bars" by means of supports extending upwards from

the base rails as hitherto practised I provide the underside of the "shake bars" *h* with stiffening bars *i*, posts or blocks *k* and tie rods *l* to keep them rigid, and I mount the free ends of the "shake bars" upon adjustable standards *m* (see enlarged views Figs. 2 and 3) inside each of which is a vertical screw *n* capable of turning freely and rising and falling therein. Upon the central part of this screw is mounted a worm wheel *o* the base of which is threaded like a nut working upon the screw *n* (see Fig. 3).

Into this worm wheel *o* gears a worm *p* keyed upon a transverse shaft *q* fitted with a hand wheel *r*, so that by turning this hand wheel the "shake-bars" *h* can be set exactly horizontal or raised or lowered at one end as may be required, to regulate the flow of pulp on the wire or web *f*, and the quality of paper produced, whilst the machine is in motion and the pulp is passing along the wire, without any necessity for stopping the continuous action thereof.

The vertical screws *n* when adjusted may be fixed by tightening the set screws *s*.

Having now particularly described and ascertained the nature of my invention and in what manner the same is to be performed I declare that what I claim is:

First. Imparting rigidity to the "shake bars" at the "wet end" of paper making machines by means of stiffening bars, blocks, and tie-rods as hereinbefore described and illustrated by the drawings annexed, and

Secondly. I claim supporting the free ends of such "shake-bars" upon adjustable standards the height of which can be regulated at pleasure by means of vertical screws actuated by worm gearing and a hand wheel substantially in the manner and for the purposes hereinbefore set forth and illustrated by the drawings annexed.

Dated this 20th day of September 1894.

GEO. DAVIES & SON.

(Here follows folded diagram marked page 87.)

A.D. 1893. Dec. 22. N° 24,669

CRAIG'S Complete Specification.

(2nd Edition)

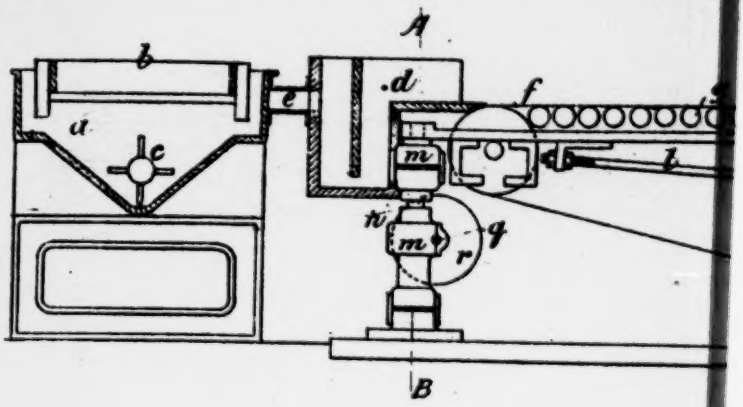

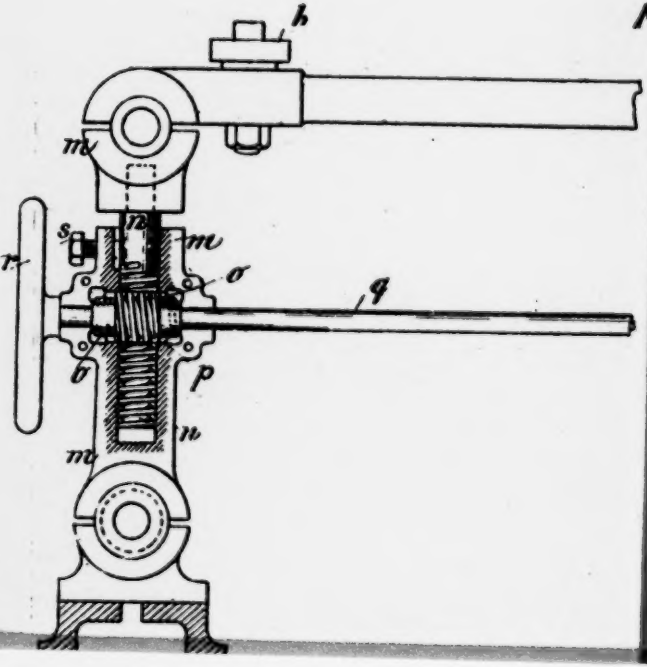

'This Drawing is a reproduction of the Original on a reduced scale.'

Fig. 1.

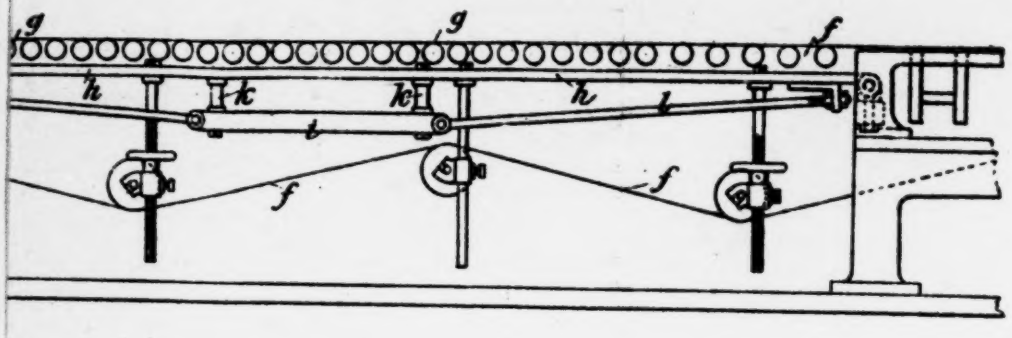

Fig. 2.

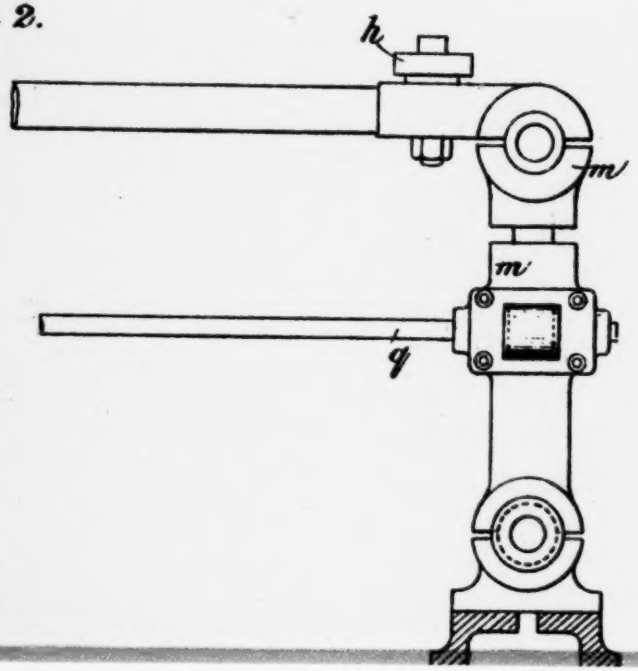

Fig. 3.

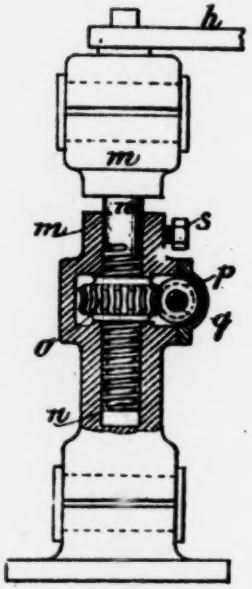

HEINZ SCHNITZLER IN REUTLINGEN.

Langsiebpapiermaschine mit rotierendem Stoffeinlauf auf das Sieb.

Fig. 8.

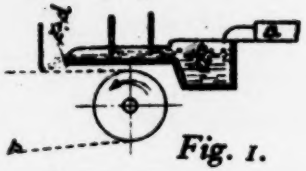

Fig. 1.

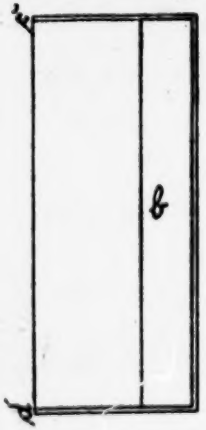

Fig. 2.

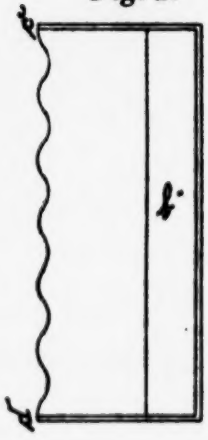

Fig. 3.

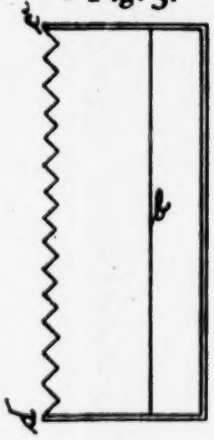

Fig. 4.

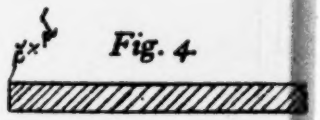

Fig. 5.

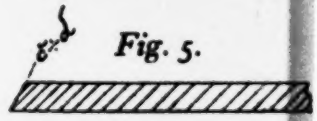

Fig. 6.

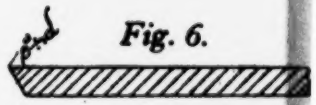

Fig. 7.

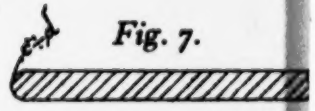

Fig. 9.

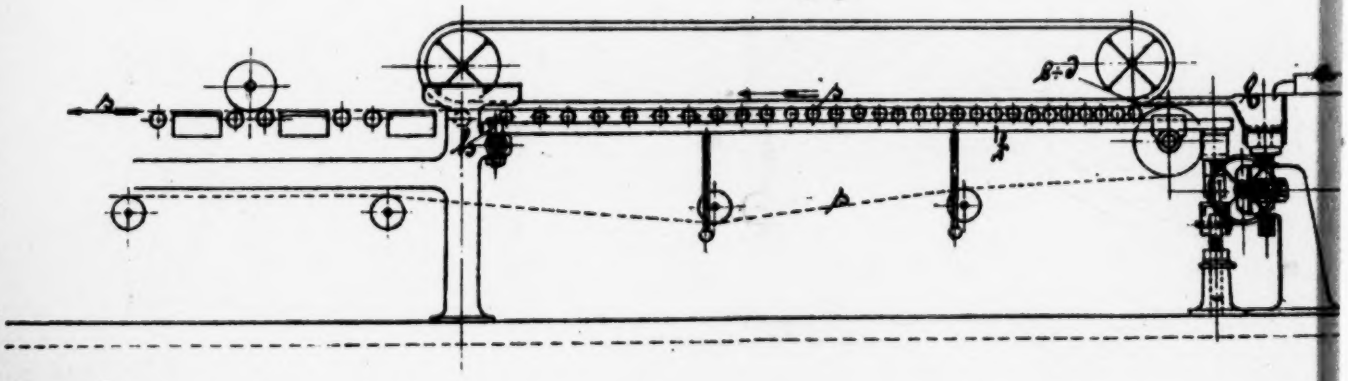

DRUCK DER REICHSDRUCKEREI

United States Circuit Court of Appeals for the First Circuit.

No. 1504.

MINNESOTA & ONTARIO PAPER COMPANY, Defendant, Appellant,

v.

EIBEL PROCESS COMPANY, Plaintiff, Appellee.

Stipulation.

[Filed August 10, 1921.]

It is stipulated that in the transcript of record to be filed with the proposed application for certiorari in the above-entitled case, the German text of the German patents included in the exhibit book may be omitted, the translation thereof appearing in the exhibit book in each case to be printed in said transcript with reproductions of the drawings of said patents respectively.

A. C. PAUL,
Solicitor for Appellant.
FISH, RICHARDSON & NEAVE,
Solicitors for Appellee.

Schnitzler German Patent No. 144,508.

The German text, making pages 89 and 90, is omitted pursuant to the foregoing stipulation.

(Here follows diagram marked page 91.)

Translation.

German Patent No. 144,508.

Class 55d.

HEINZ SCHNITZLER, Reutlingen.

Endless-Wire-Cloth Paper Machine with Stationary Stock Inlet to the Wire Cloth. Patented in the German Empire from December 12, 1901. Published September 23, 1903.

This invention relates to the stock-inlet box of an endless-wire cloth paper machine. The essential characteristic consists in the fact that the inlet edge lies stationary over the shaken wire cloth.

Heretofore the stock-inlet box has been fastened to the side rails of the shaking frame, so that it took part in the shaking movement of the straining table. The stock, in that case, flowed directly from the stock-overflow edge, resting on the wire cloth, on to the latter. The points of the small fibers of the stock pass over the edge and are seized and entrained by the wire cloth, so that most of them come to lie in the direction of movement of the wire cloth.

According to this invention, the overflow edge *c d* of the stock-inlet box *b* with the inlet *a* lies a little above the wire cloth *s*, not touching the latter nor taking part in the shaking movement. The stock flowing on to the wire cloth is seized by the wire cloth which is being shaken, throwing the stock back and forth, so that the fibers come to lie in every direction, producing good interlacing (or felting) of the paper web. The shaking movement is produced from the side.

In case the strainer table *f*, rotable around pivot *h*, is intended to work with inclination, and also for the purpose of accurate adjustment relative to the wire cloth *s*, the stock-inlet box should be arranged adjustably. This may be done by mounting or supending it with parallel displacement in such a manner that it can be raised and lowered (see fig. 9).

The overflow edge *c d* may be rectilinear (fig. 1), in which case the stock will flow in an even stream on to the shaken wire cloth, and the fibers in passing over the edge do not change their relative positions.

Figs. 2 and 3 show respectively a wavelike and an indented overflow edge, whereby the relative positions of the fibers in passing over the edge are further influenced.

In said figures 1 to 3 the edge may also have one of the profiles illustrated in figs. 4 to 7.

Figs. 8 and 9 show the total arrangement of the inlet box relative to the straining table.

FERD. ANDRES IN

Vorrichtung zur parallelen Vertikalstellu
während d

Fig 1.

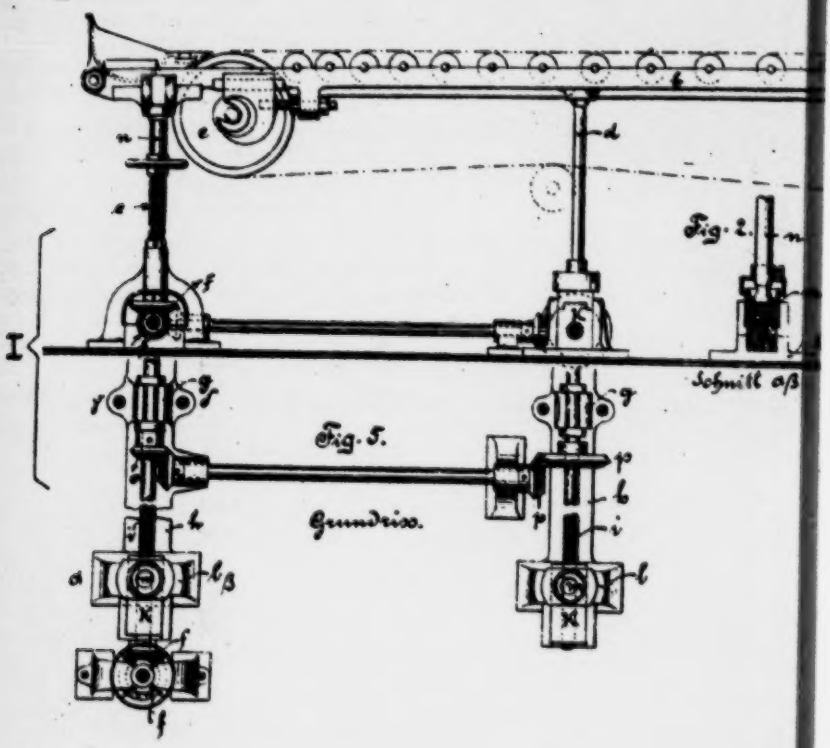

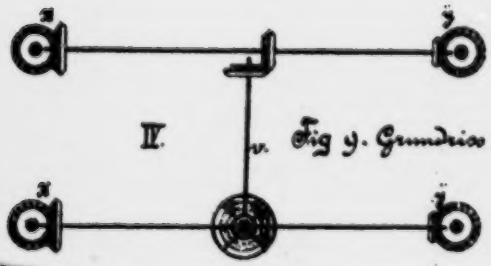

DÜREN, RHEINLAND.

ung der Registerpartie an Papiermaschinen des Betriebes.

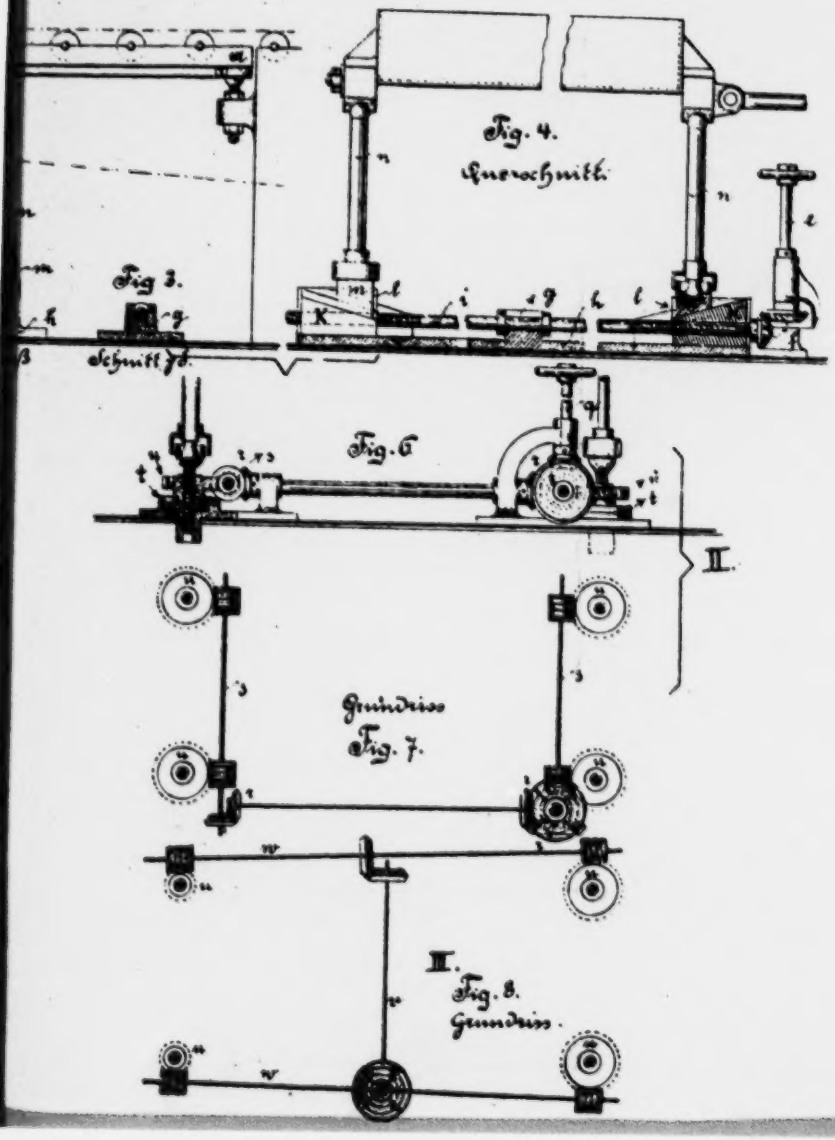

Zu der Patentschrift

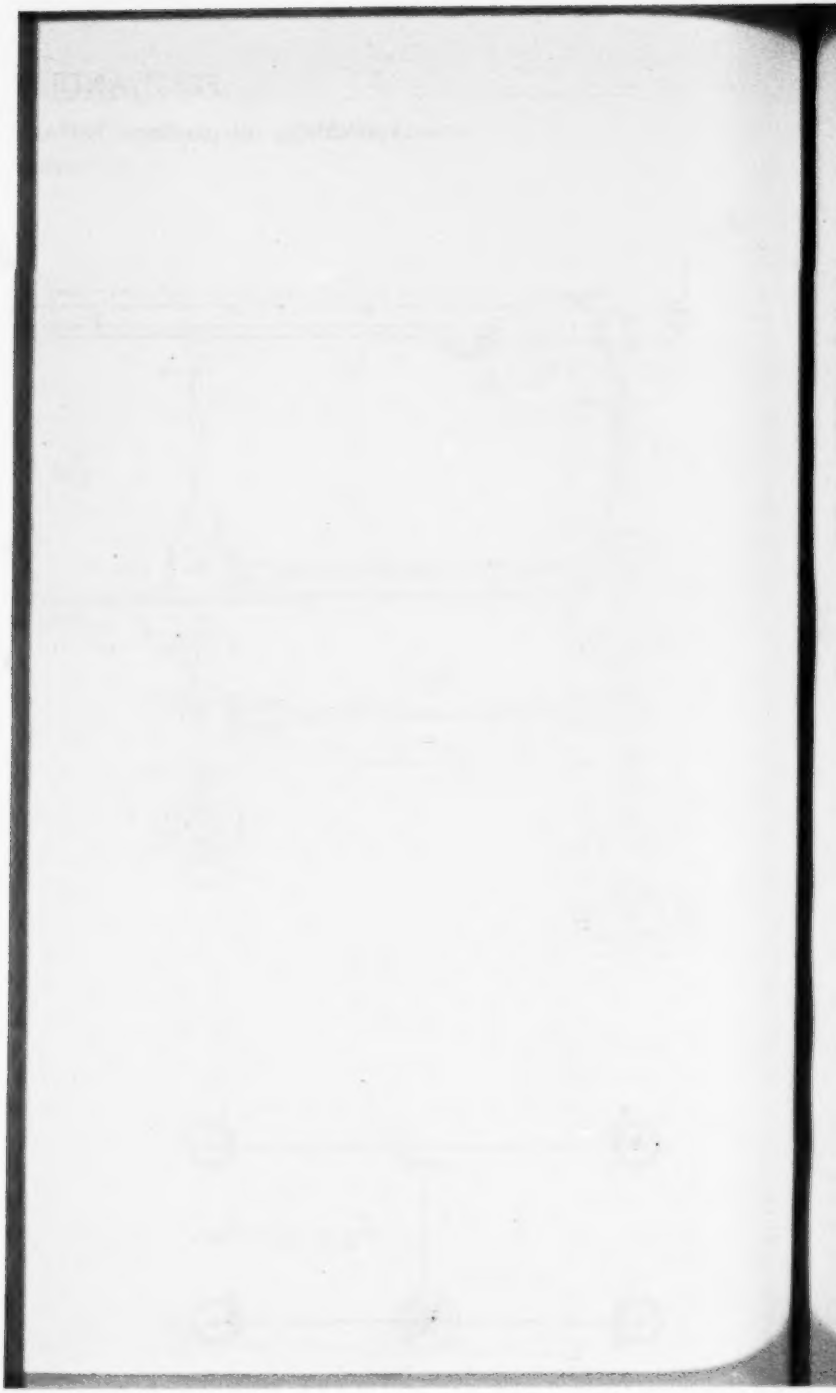

Claims.

1. Endless-wire-cloth paper machine with stationary stock inlet to the wire cloth, characterized by the fact that the stock-inlet box (*b*) is arranged independently of the shaking frame in such a manner that the stationary overflow edge (*c d*) of the stock-inlet box (*b*) will be a short distance above the wire cloth, so that the stock will flow in an even stream, without being shaken, on to the wire cloth which is being shaken.

2. An embodiment of the invention according to Claim 1, characterized by the fact that the overflow edge(*c d*) of the stock-inlet box (*b*) may be not merely rectilinear but indented, wavelike, rectangular, inclined, undercut or rounded.

3. An embodiment of the invention according to Claim 1, characterized by the fact that the stock-inlet box (*b*) is capable of being raised and lowered, said box being suspended or standing.

Andres German Patent No. 83,020.

The German text, making pages 95, and 96, is omitted by stipulation. See page 89.

(Here follows folded diagram marked page 97.)

Translation.

German Patent No. 83,020.

Class 55: Paper Manufacture.

FERD. ANDRES, Duren, Rheinland.

Apparatus Enabling the Side Rails of the Shaking Apparatus in Paper Machines to be Placed in a Parallel Vertical Position During Operation. Patented in the German Empire from January 22, 1895. Published August 21, 1895.

In order to produce paper free from cloudy effects and stripes and of greater toughness and resistance to tearing, also to produce heavier papers and paper boards, it is advantageous to have the wire cloth rise from the breast roll. Thereby the velocity of movement of the paper stock becomes more uniform, besides which the stock is prevented from passing out from behind the skimming boards under pressure, which would stir up again the lower web of fiber already formed on the wire and destroy the uniformity of the interlacing of the fiber.

Practical experiments have also shown that different thicknesses of paper and different compositions of stock require different vertical adjustment.

To that end it has heretofore been necessary for each separate breast-roll support as well as each shaking-bar support or side-rail support to be separately raised or lowered in a greater or less degree.

The object of the invention is to enable the entire shaking section, or a part of the same, to be conveniently and rapidly lowered toward the breast roll in an absolutely uniform manner and in greater or less degree, whereby the shake supports *d*, located between the bearing ends *a* (forming ball sockets) of the side rails *b* and the breast roll *c* are simultaneously displaced more or less according to the degree of inclination.

In the accompanying drawing, four means for the vertical adjustment are shown, which, however, do not preclude the employment of other driving mechanism for the simultaneous displacement of all the shaking-bar supports or side-rail supports, such as bell-crank levers, eccentrics, worm wheels, etc.

In arrangement I (figs. 1 to 5) the displacement is effected by the vertical hand-wheel shaft *e*, conical gears *ff*, screw *i* provided with right-hand and left-hand threads and supported in the middle by a forked bearing *g* of the cross-piece *h*, wedges *k* which are provided with right-hand and left-hand threads respectively and on which rest the ball sockets *m*, in vertical guides *l*, for the shake feet *d* and *n* respectively. Pairs of gears *o* and *p*, of suitably different sizes, serve to transmit the movement from one pair of shake supports to the other. Instead of different ratios of transmission of the

CHRISTIAN SEYBOLD IN DÜREN, RHLD.

Registerpartie an Langsiebpapiermaschinen.

Fig. 2.

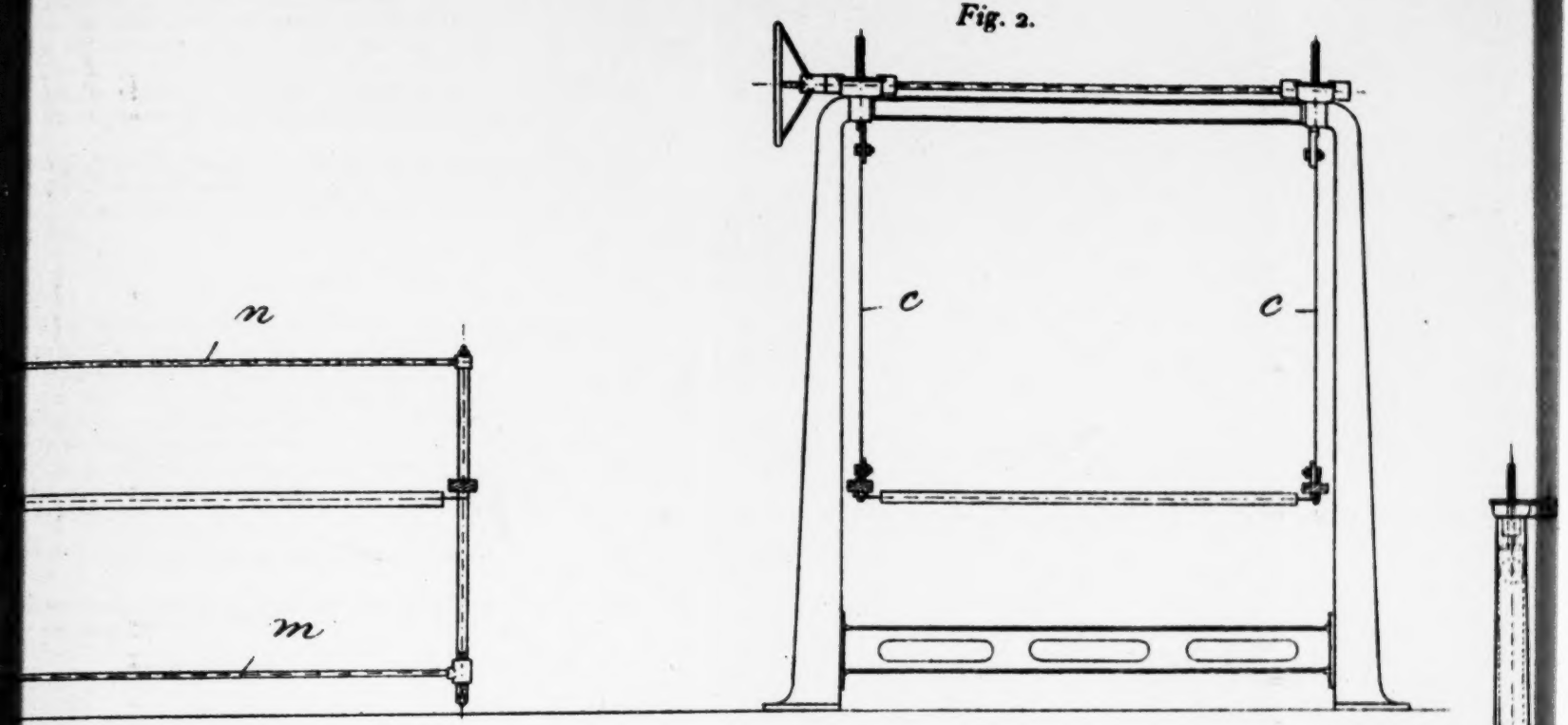

Fig. 1.

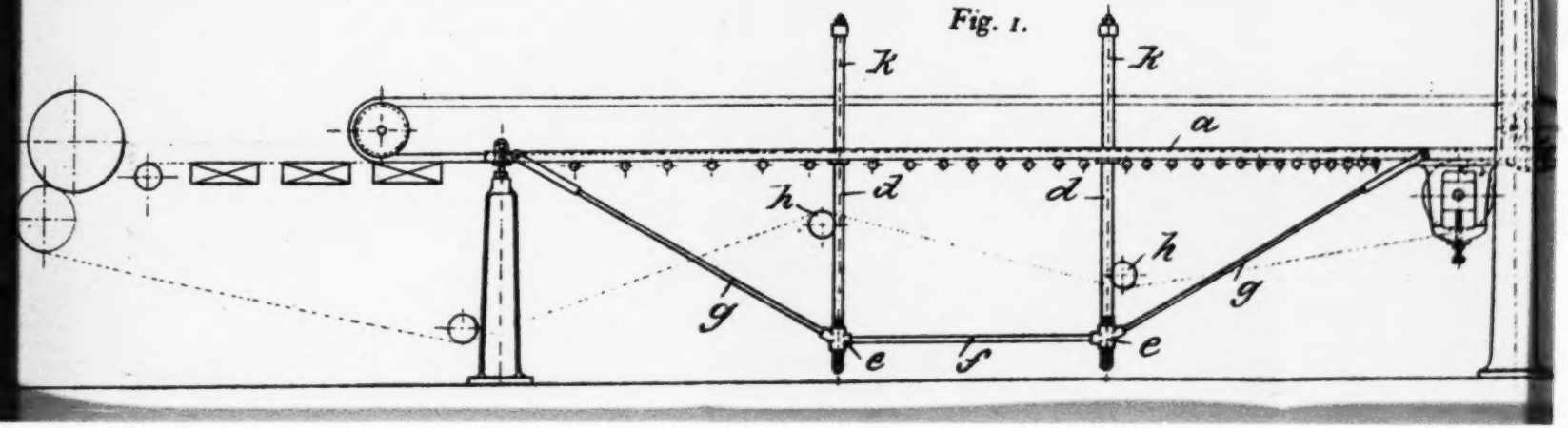

bevel gears, the pairs of wedges may be of different conicities, or the pitch of the wedge screw threads may be varied in the same ratio.

In arrangement II the driving mechanism consists of hand-wheel shaft q, double bevel gears r alongside of the base and worm shafts s crosswise of the same, worm wheels u provided with screw threads and held down by two-part plates t. The difference in the movement of displacement is in this case brought about by the different ratios of the worms or of the worm wheels or the pitch of the screw threads.

In arrangement III, the driving shaft v lies crosswise of and the worm shafts w longitudinally to the base. In arrangement IV, the worms and worm wheels are replaced by pairs of bevel gears x y of different sizes.

Claim.

Apparatus for the convenient and rapid vertical displacement of the entire shaking section in paper machines, or of a part of the same, so arranged that by rotation of a hand wheel or movement of a lever, etc., all of the shake feet, on the driven side as well as on the driving side, are capable of being proportionately raised or lowered more or less, from one point, by means of wedges capable of being drawn in and out with threaded or worm wheels with two-part plates and threaded bolts, or of bevel gears or worm wheels or other driving mechanism.

Seybold German Patent No. 128,826.

The German text, making pages 101 and 102, is omitted by stipulation. See page 89.

(Here follows diagram marked page 103.)

Translation.

German Patent No. 128,626.

Class 55*d*.

CHRISTIAN SEYBOLD, Duren, Rhld.

Side Rails of Shaking Apparatus of the Endless-Wire Cloth Paper Machines. Patented in the German Empire from March 5, 1901. Published March 7, 1902.

The number of supporting elements of the shaking apparatus may be restricted to one located at the beginuning of the side-rail of the shaking section, and thus the intermediary space is freed of obstructions, and the parts are rendered more easily accessible when the side rails are made to form part of a truss. This is of great advantage because it eliminates a number of pivotal points and bearings which cause much friction and can never be kept free of water. The shaking is greatly facilitated. Moreover, the uniform adjustment of a number of supporting elements is a very tedious operation.

According to this invention the side rails form part of a truss of unique construction. It thus becomes possible, without much increasing the weight of the straining section and without affecting the shaking movement, to produce a straining frame which is suspended freely over its entire length, being supported only at one end. In this connection the following point is of importance.

The vertical struts of the truss serve at the same time as supports for the bearings carrying the rolls which return the wire cloth, and such struts are not only connected by transverse stays at the bottom but are prolonged beyond the wire cloth at the top and there once more connected by transverse stays. This insures the necessary rigidity which enables the entire straining section to accomplish the shaking movement as a single connected structure.

In the drawing

Fig. 1 is a side view, and

Fig. 2 are sections.

The side rails *a* are suspended only at one end *b* to bands *c*. The vertical struts *d d* with heads *e e*, side rails and tension rods *f g g* form the truss. The struts *d d* carry the rolls *h h* and are prolonged by extensions *k k*. Transverse stays *m n* complete the structure. The side rails, instead of being suspended by bands, may be supported from below.

Claim.

Side rails of shaking apparatus of endless-wire cloth paper machines characterized by the fact that the side rails, supported or suspended at their free end and expediently connected with a lifting device, form part of a truss the vertical struts (*d*) of which, carrying

Fig 4

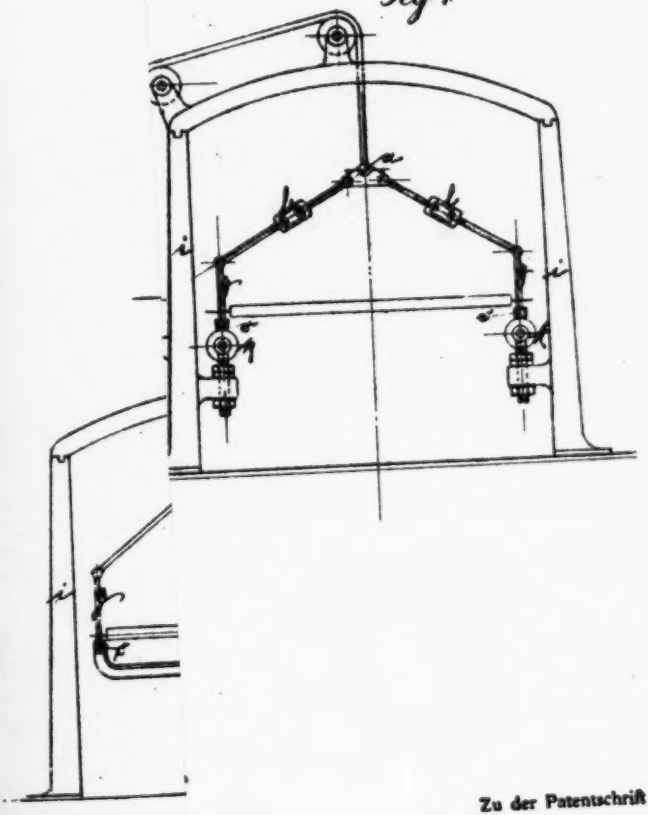

Zu der Patentschrift

№ 146021.

the lower wire-cloth guide rolls are prolonged upwardly, so that, by fitting transverse stays (*m n*) to the upper and lower ends of the struts (*d k*) the two side rails are connected into a rigid frame.

Bruderhaus German Patent No. 146,021.

The German text, making pages 107 and 108, is omitted by stipulation. See page 89.

(Here follows diagram marked page 109.)

Translation.

German Patent No. 146,021.

Class 55*d*.

MACHINENFABRIK ZUM BRUDERHAUS, Reutlingen.

Straining Apparatus with Oscillating Suspension for Paper Machines. Patented in the German Empire from March 30, 1902. Published November 20, 1903.

Various forms of construction of straining apparatus with oscillating suspension for paper machines are known; all of them have this feature in common that the suspension takes place at two or more points.

The novelty of the present method of suspension of the straining section consists in the fact that the suspension takes place at a single point, which insures easy and natural oscillation with the least possible number of parts subject to wear, good interlacing (or felting) of the paper fiber and adjustable rocking movement of the shaking section, which movement can be easily limited.

Fig. 1 is a side view and fig. 4 a front view of such a straining section.

Figs 2 and 3 are two other forms of construction of the suspension.

The straining section is so attached at the rear ends of its side rails, in the usual manner, as to be rotatable in every direction, and at the front it is suspended in a frame *i* at a single point, the hinge *a*, by means of a rope, chain or belt (figs. 2, 3 and 4). An adjusting and tension device *l* (fig. 4) enables accurate adjustment.

In the modification according to fig. 2 the tension device is omitted, also according to fig. 3 in the supporting clip *h*. Below the side rails *c* stays *m* are provided with which the shaking apparatus may be connected.

The adjustable rolls *k*, fig. 4, are designed to enable the rocking motion of the straining section to be accurately limited, and serve at the same time, in case of accidental breaking of the rope or chain, to prevent all injury to the straining section or dropping.

When the straining section is moved back and forth by the shak-

ing apparatus, it will oscillate around the point *a* the amount of the movement being made dependent on the position of the rolls *k*.

The connection of the straining section with the point of suspension *a* may be effected in various ways and by means of various stays (or stiffeners) *g*. The raising and lowering of the straining section is brought about by the apparatus *f d* (fig. 3).

Claim.

Straining section with oscillating suspension for a paper machine, characterized by the fact that the suspension takes place at a single point (*a*) at the end of the straining section by means of an adjustable rope, chain, belt or the like, capable of being put under tension, to the end of bringing about in a very easy manner a rocking motion which promotes the interlacing of the fiber, while rolls *k*, adjustably located under the straining section, serve to limit the rocking motion of the straining section and to catch the latter in case of an accidental breaking of the rope.

United States Circuit Court of Appeals for the Second Circuit.

EIBEL PROCESS COMPANY, Plaintiff-Appellant,

v.

REMINGTON-MARTIN COMPANY et al., Defendants-Appellees.

Before Ward and Rogers, Circuit Judges and Mayer, District Judge.

Appeal from a decree of the District Court for the Northern District of New York, dismissing a bill for infringement of patent to William Eibel, No. 845,224, dated February 26, 1907, covering an improvement in Fourdrinier machines for making paper. Claims 1, 2, 3, 7, 8 and 12 are in controversy.

Frederick P. Fish, Guy Cunningham and Harrison F. Lyman for Plaintiff-Appellant.

Frank L. Crocker for Defendants-Appellees.

MAYER, *J.*:

The Fourdrinier machine has been known and used for over a hundred years and has attained an efficiency beyond which it is difficult to advance. It is the machine universally employed for making all except a few special sorts of paper.

In the following description we have adopted almost literally the language used by the expert, Arthur D. Little, in his admirably clear and concise exposition of the art.

The Fourdrinier is an aggregation of several sections, each composed of many parts, and each section performing a function which is in a sense independent, although for the production of a sheet of finished paper all these functions are interdependent and must be

co-ordinated. The first section of the machine has for its function the actual formation of the web, which is later to be transformed into the finished paper, and it does this by distributing the wet stock as uniformly as possible upon an endless wire-cloth sieve, to which, as it travels forward, a sidewise motion or "shake" is imparted to insure the felting and interlocking of the fibers as they are deposited upon the wire by the drainage through the wire of the water in which they were suspended, and this portion of the machine is further supplied with mechanical devices known as suction boxes over which the wire passes, and whose function is to compact the sheet by atmospheric pressure which forces into the box considerable additional water not removable by drainage.

The next great division or section of the Fourdrinier machine has for its purpose the compacting of the wet sheet by mechanical pressure under rollers, and the compacted sheet then passes continuously to the third section of the machine, the function of which is to dry the sheet, the drying being effected by carrying the sheet over the surface of heated metal cylinders or dryers.

The remaining sections of the Fourdrinier machine have for their object the "finishing" of the sheet by improving or smoothing its surface by means of heavy and highly polished steel rolls between which the sheet is passed.

It is primarily with the first section, that is, the sheet-forming section, known as the Fourdrinier part or wet end of the machine, that the Eibel process is concerned, which end of itself strictly, although not always popularly, speaking constitutes the Fourdrinier machine. This consists of:

1. A flow box into which is pumped a constant supply of the paper-making stock consisting usually of fibers of wet pulp with or without added mineral matter, the whole being mixed with from 135 to 200 times its weight of water, and having the appearance of diluted milk.

2. An endless wire sieve woven with sixty or seventy meshes to the inch in common practice and often seventy-five feet long and 100 inches or more wide, the whole traveling rapidly over the breast roll, which runs on a horizontal axis at the flow box end of the machine, and the couch roll likewise running on a horizontal axis at the further end of the machine from the flow box.

3. A supporting frame bearing a series of parallel horizontal rollers called table rolls between the breast roll and the couch roll, upon which table rolls the top or active portion of the traveling endless wire sieve is supported so as to present a plane but not necessarily horizontal surface for the reception of the stock.

4. An opening connected with the flow box called the "slice" opening through which the mixture of fiber and water called "stuff" or the "stock" flows on to the sieve in a stream the width of the desired sheet of paper. The stock is carried along on the sieve, draining off its water as it goes until before the couch roll is reached at the further end of the wire the greater part of the water has drained away and

the paper in the form of a uniformly distributed wet pulp has sufficient strength to hold together and be carried through a series of pressing and drying rolls and calendars from which it is rolled up as complete paper.

5. Deckle straps consisting of endless rubber bands of square or rectangular section traveling at the speed of the wire are placed at each side of the wire in contact with the top of the same. They are supported on wheels above the wire so that their bottom side which is in contact with the wire runs along with it, the strap thus forming a wall which prevents the paper stock from running off at the sides of the wire.

6. About twenty feet from the breast roll a series of suction boxes is placed beneath and in contact with the under surface of the wire. A partial vacuum is maintained within these boxes so that through the agency of the atmospheric pressure upon the upper surface of the wet pulp a greater part of the water then remaining in the paper stock is forced out of the pulp into these boxes, so that very little free water remains in the wet web of paper after this has passed beyond the suction boxes.

These are the essential features of the Fourdrinier machine. It comprises in addition many supplementary details of construction and equipment. For instance, above the suction boxes in contact with the surface of the paper is a skeleton roller faced with wire cloth and called the "dandy roll" which gives to the upper surface of the paper substantially the same texture as the surface in contact with the paper-making wire.

Under the wire from the breast roll to the suction boxes are shallow boxes or trays for receiving the water which runs through the wire sieve. This water contains a considerable amount of fiber and of mineral matter—provided clay or similar materials have been used for loading; and to prevent waste this water carrying these materials in suspension is caught by these "savealls," as they are called, and pumped back again into the paper stock before it reaches the flow box.

The last roller for supporting the wire is larger than the others and is called the guide roll, since it is equipped with a device for automatically varying the position of the axis of this roll as may be necessary to keep the wire running straight. After the wire goes over the guide roll it drops to the couch roll at a different angle.

In addition and very important is the "shake," namely, means for shaking the whole front end of the machine sidewise to promote the interlocking and felting of the fibers during the process of deposition by drainage. The motion of the shake is very rapid, say two or three times a second, and its amplitude may rarely amount to as much as one-half an inch.

Paper machines of the Fourdrinier type are very expensive, the cost of a news machine independent of its housing often reaching $100,000, so that, in order to earn a proper return upon this heavy investment, the paper-maker is forced to utilize to the utmost the productive capacity of the machine. The machines are constantly operated day and night, and every endeavor is made to run them at

the highest speed consistent with the quality of merchantable paper desired under the conditions imposed by the character and quality of stock and the limitations of the particular machine itself. The desirability of securing the maximum production is, of course, obvious in case of any sort of paper, but where news paper is concerned, the low price of the product and the competition among the mills, with the resultant small margin of profit, make the question of output one of vital importance. With a given machine the total cost of labor and overhead charges is approximately the same whether the machine is producing twenty-five or thirty-five tons for twenty-four hours, so that if a machine normally rated for, say twenty-five tons, can have its production increased to thirty-five, the additional ten tons of paper thus gained is produced at little more than the cost of the materials entering into its composition.

In operating the machine, the paper stock in the flow box flows on to the paper-making wire at, or more commonly slightly beyond, the breast roll, the thickness of the stream flowing on to the wire being governed by a cross-bar extending across the entire width of the sheet of paper to be made, and at a height above the wire corresponding to the amount of stock which it is desired to flow upon the wire. This cross-bar is called the slice, and it holds back the stock from the wire, so that only a stream of the desired thickness can escape from the flow box out under the slice on to the wire. The supply of stock is so adjusted that the stock in the flow box behind the slice extends some distance above the bottom of the slice, and therefore the stock flows out on to the wire under the pressure of a hydraulic head, which may be varied within certain limits if the paper-maker so desires. The original purpose of the slice was to keep the froth and chips, if any, upon the surface of the stock from flowing on to the wire and causing breakage of the paper with the loss of production incident thereto, but it has also the effect in so far as it assists in the maintenance of a hydraulic head of giving a substantial speed to the stock as it flows upon the wire. If the head in the flow box is, for example, two and a quarter inches, the speed with which the stock at the bottom of the stream will flow to the wire will be substantially 200 feet per minute.

Accordingly, if the paper-making wire under these conditions is run at a speed not exceeding 200 feet, the wire has no work to do in the way of causing the stock to attain the speed of the wire, since the stock starts at that speed, and, although it is true that even in that case the wire performs the work of drawing along the stock, yet the work is slight, as the wire has no inertia of the stock to overcome, but only the friction of the air. If, however, the wire runs at 400 feet a minute, as was a common speed for news machines, that is, machines making news paper, at the time of Eibel's invention, then the making wire would be moving at a speed twice that of the stock coming on to the wire under a head of two and a quarter inches, and the wire drawn out from under the paper stock, causing under these conditions waves and ripples, until the wire had by its friction given to the stock approximately the speed of the wire. Even when the stock starts at the exact speed of the wire, ripples always occur in the first portions of the flow on the wire of any machine running at any speed

which even approximates 200 feet per minute. Many factors prevent an instantaneous quiescence of the sheet of stock, and the quantitative influence of each at the start is difficult to measure. Among these factors are the irregularities caused by the rush of water from under the slice, the variations between the speeds of the top and bottom of the sheet of stock, the effect of the shake, which is greatest near the breast roll, and the effect of the drainage of water through the wire, which is also greatest immediately after the stock comes upon the wire, and causes irregularities of flow.

Accordingly, it is recognized by paper-makers that the sheet is necessarily more or less rippled for several feet from the slice, and any sheet smoothing out in that distance may be said to do so "at the start." As the machine is speeded up above 200 feet in case of machines with a horizontal wire, the wavy part extends further and further from the slice, and greater commotion is caused. This establishes a limit to the possible speed of the machine, for while waves and ripples, if confined to the beginning of the wire, have substantially no effect on the sheet, because of the great fluidity of the stock at this point, and the fact that the sheet has hardly begun to form, yet if the disturbed condition is allowed to extend too far down the wire to a point where the viscosity of the stock is increasing so rapidly as to prevent readjustment after an initial disturbance, the paper formed will be irregular, because that formed at the crest of the waves will be thick, and at the hollows very thin, and the proper interlacing of the fibers will be disturbed, or checked. At a further increased speed the paper, owing to these irregularities in structure, would break on the machine so often, causing so many delays and interruptions that no gain in production would follow from the increased speed. Eibel recognized that the variation of speed between stock and wire was the chief cause of this long extending commotion of the stock on the wire, which made the paper uneven in texture and strength, and caused breaks, and thus limited the increase in machine speeds, and this invention relates to the remedy.

Eibel announced what he believed was a new principle of operation as follows:

"In accordance with my invention I operate entirely above the level to cause the stock to travel by gravity at a velocity approximately equal to the speed of the making-wire, which I believe to be a new principle of operation"

He recognized and understood what had been done in the art in this respect up to his time, for in his specification he explained:

"The Fourdrinier wire has usually been arranged to move in a horizontal plane, although I am aware that means have been provided for adjusting the breast-roll end of the wire to different elevations, usually below the level, to provide for running with different grades of stock—as, for instance, with quick stock and slow stock; but so far as I am aware the making-wire has always had to perform the work of drawing along the stock, and as the

wire moved much faster than the stock the stock waved or rippled badly near the breast-roll end of the wire, which gradually diminished until an equilibrium was established and a smooth, even, and glassy surface presented, and not until the waving or rippling ceased did the fibers lay down uniformly and produce a well-formed sheet of paper. The machine has been run necessarily at a low rate of speed to give ample time for the water to escape and for the fibers to lay down so as to make a uniform sheet, and in case the time was insufficient the breast-roll end of the wire has been lowered still farther until the desired results was accomplished."

The prior art showed instances where the pitch of the wire had been two or three inches and in two isolated cases up to six inches; but, as soon as the Eibel process became known, its principle was extensively adopted and applied so that today Eibel's process is the practice of the art.

The testimony is that 2,600 tons of news paper was manufactured daily in the United States in accordance with the Eibel patent and the machines have been speeded up from an average of 400 to 450 feet per minute to over 680 feet per minute; and that speed may, at any time, be exceeded, for the only limits which remain are certain practical factors such as strength of machine parts, drying capacity and ability of the workmen in handling the paper.

In short, the commercial success has been wide and pronounced in an art where time means money and increased production at practically no increased expense reflects itself in increased profits.

Among the tributes to the efficacy of the invention are the two infringing machines of defendant, in one of which the wire has a pitch of eighteen inches from breast roll to guide roll and in the other a pitch of twenty inches, enabling the speed to reach about 550 and 575 feet respectively per minute.

We are satisfied from the evidence that Eibel was the first to instruct the art in a new principle of operation and we agree with the conclusions of the district judge, when he pointed out succinctly what Eibel had accomplished:

"So far as I have been able to discover, no one claims to have discovered the advantages of having the wire carrying the stock and the stock move together at substantially the same speed, the stock impelled by gravity and directed by the wire, and to have embodied such idea and principle of operation in a patent, or an application for a patent, prior to the application by Eibel. This idea, so far as Letters Patent are concerned, appears to have been evolved by Eibel.

"It was urged—that it was not invention to ascertain and fix the degree of incline and ascertain by experiment the best method of paper making by means of a moving wire so adjusted. The rule is invoked that it is not invention to improve in degree merely on a principle of operation old in the art. This may be conceded, but I think Eibel discovered and practically disclosed much more than this. He not only elevated the breast-roll end of the paper-making

wire but regulated the speed at which the wire should move, making it move at equal speed with the stock, so that there is no obstruction to the natural flow of the stock under the influence of gravity and consequently no eddies and ripples and uneven laying down of the fibers."

The district judge, however, held the patent void in view of the disclosures of previous patents and of prior uses and intimated that the language of the claims was "indefinite" and "uncertain." These claims are as follows:

"1. A Fourdrinier machine having the breast-roll end of the paper-making wire maintained at a substantial elevation above the level, whereby the stock is caused to travel by gravity, rapidly, in the direction of movement of the wire, and at a speed approximately equal to the speed of the wire, substantially as described.

"2. A Fourdrinier machine having the breast-roll end of the paper-making wire maintained at a high elevation, whereby the stock is caused to travel by gravity faster than the normal speed of the wire for a certain grade of stock, and having means for increasing the speed of the machine to cause the wire to travel at substantially the same rate of speed as the rapidly-moving stock, substantially as described.

"3. A Fourdrinier machine having the paper-making wire declined from the breast-roll to the guide-roll, the breast-roll end of the wire being maintained at a substantial elevation above the level, whereby the stock is caused to travel by gravity, rapidly, in the direction of movement of the wire, and at a speed approximately equal to the speed of the wire, substantially as described."

"7. A Fourdrinier machine having the paper-making wire declined from the breast-roll, to the guide-roll, and the suction boxes supported at a corresponding declination, substantially as described.

"8. A Fourdrinier machine having the paper-making wire declined from the breast-roll to the guide-roll, and the several suction-boxes arranged at different elevations, substantially as described.'

"12. In a Fourdrinier machine, a downwardly-moving paper-making wire, the declination and speed of which are so regulated that the velocity of the stock down the declining wire, caused by gravity, is so related to the velocity of the wire in the same direction that waves and ripples on the stock are substantially avoided and the fibers deposited with substantial uniformity on the wire, substantially as described."

We will now consider (1) prior patents; (2) prior use, and (3) validity of the claims as drawn.

(1) The prior patents. Six United States and ten foreign patents were received in evidence. All show means for effecting a slight adjustment of the breast-roll and none amounts to more than an

illustration of the drainage adjustment which Eibel fully understood and referred to in his patent. The patents demonstrate that skilled men prior to Eibel did not appreciate the possibility of raising the breast-roll end of the machine more than an inch or two, and that none of them had the faintest conception of the principle of operation which characterizes the Eibel invention.

(2) Prior use. We think it is clearly established that no one of the alleged prior users had any understanding or appreciation of the Eibel principle. The question then remains whether as matter of fact the Eibel principle was operated and whether, therefore, his contribution is merely an improvement representing an advance in degree.

Eight prior uses were testified to. Three of these (Rhinelander, Wisconsin, Palmer Falls, New York, and Niagara Falls, New York) do not merit discussion.

The use at Stockton, California, the latest date of which was 1892, must be regarded as an abandoned experiment, and the pitch of one and one-half inches as an unsuccessful temporary expedient. The highest speed attained was 250 feet per minute and the regular speed 220 feet per minute.

Willamette Company, at Oregon City, Oregon. Here there were five machines, having pitches of two inches in some instances and three inches in others.

When the Eibel patent was issued only two of these machines were carrying pitches, and the best speed was from 400 to 450 feet.

On August 4, 1907, about five months after the issue of the Eibel patent, the wires were elevated on the various machines from eight to over twenty inches, with a resultant increase of speed from 400 or 450 feet to from 500 to over 680 feet.

Warner, a machine tender and presumably expert man, referring to conditions at the Willamette mill, said:

"We were continuously trying to form a better sheet, to make an increase in the speed that they were calling for. They wanted more speed, and at the same time they wanted as good a grade of paper. We puzzled our brains over the business to find a way to meet the requirements. * * *

"Our mill wasn't paying very well, and we were wild to increase our product, and trying all manner of schemes to increase the speed of the machines, that might make some profit off the mills."

Nothing could be more convincing of the futility of a so-called use than the failure by expert practical men to accomplish a desired result and the discarding of an old method and the adoption of a new one immediately upon its advent.

Remington-Martin at Norfolk, N. Y. When the Eibel patent was issued, the Remington-Martin machines were running flat, i. e., with horizontal wires. Shortly thereafter, high pitches were adopted.

Raymondville at Raymondville, N. Y. There is testimony that one machine was running at a pitch of three inches in 1903 and

that in October of that year an additional three inches was added, but the experiment was unsuccessful, for as the superintendent testified, "the machine tender had a lot of trouble and when I asked what the matter was he said he thought if I had raised the machine a little higher it would not run at all." The best proof of the failure of this effort is the fact that the production fell off.

Finally, Northern Paper Company at Green Bay, Wisconsin. The most that the evidence shows as to this use is that a pitch of not to exceed six inches was tried for two weeks or less and abandoned.

Within the limits of an opinion, it is not possible to analyze the testimony as to prior use in further detail. We think the evidence establishes that no one before Eibel had any knowledge of his theory that, where not abandoned, the slight pitches were used, in most instances, to bring stock to the dandy roll more quickly than when the horizontal wire was used, thus giving it less time to drain and causing it to reach the dandy roll in a more fluid condition; and, in any event, if there remained any doubt as to patentable novelty, that doubt would be resolved in this case in favor of the patent by commercial utility.

Tilghman v. Proctor, 102 U. S. 707, 711.
Hillard v. Fisher Book Typewriter Co., 159 F. R. 439, 441.
Borgfeldt Stripping Machine Co. v. Universal Tobacco Machine Co., 215 F. R. 715.

(3) Indefiniteness of claims. It is urged that the use in Claims 1, 2 and 3 of such words as "substantial elevation," "high elevation" and "rapidly" renders the claims void for indefiniteness and uncertainty.

It is apparent that Eibel's invention is not susceptible of definition in terms of inches or feet per minute. As Little testified:

"The exact speed for any particular pitch was something which could not be accurately determined in advance, owing to the variations in stock used, paper desired and construction of machines. Such determination is not, in fact, necessary. The grade is to be arranged to give a rapid gravity flow of the stock, and the machine then speeded up to meet it as long as the sheet remains smooth."

Any attempt to define lower and upper limits would have been an invitation to infringers.

The practical workers in the art had no difficulty in understanding that the pitch must be higher than three or four inches, and that the pitch of the wire and the wire speed must be so correlated that gravity will accelerate the stock to speed equality with the wire.

It is difficult to lay down a rule and it is best to confine the test of indefiniteness to the facts of a particular case. Where, as here, the principle of operation is made clear, the pitch is substantially higher than that theretofore known in the art, a different result is accomplished, the subject-matter is incapable of exact expression in feet and inches and the worker in the art has no difficulty in following the directions, then a claim using the phraseology of Claims 1, 2 and 3 will not be held invalid.

Defenda

Foundation Blocks under Pusey Jones Fourdriniers - American Mill, M.&O. Power C

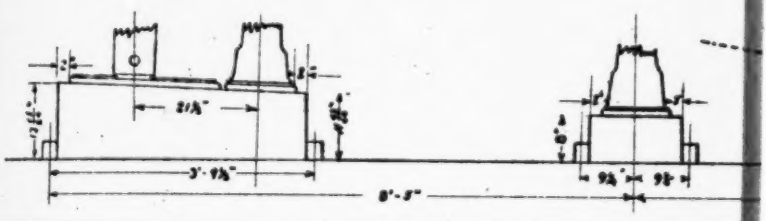

t's Exhibit A.

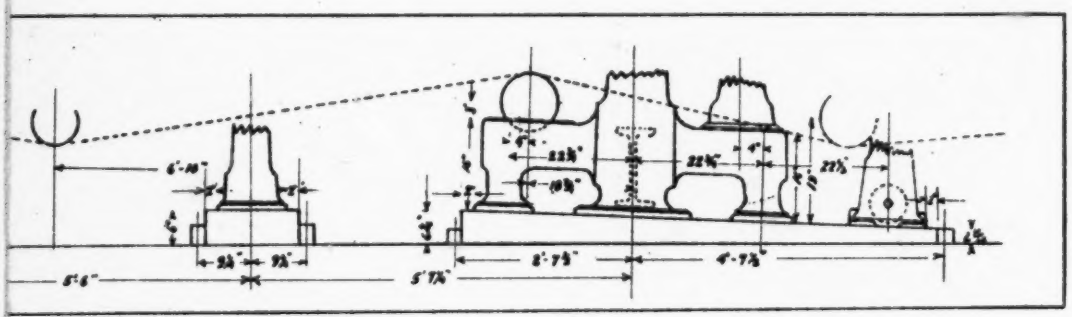

to Exhibit A.

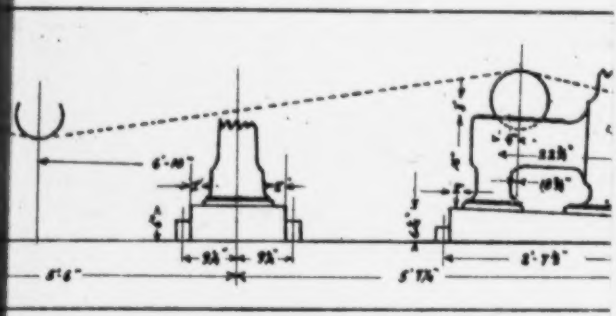

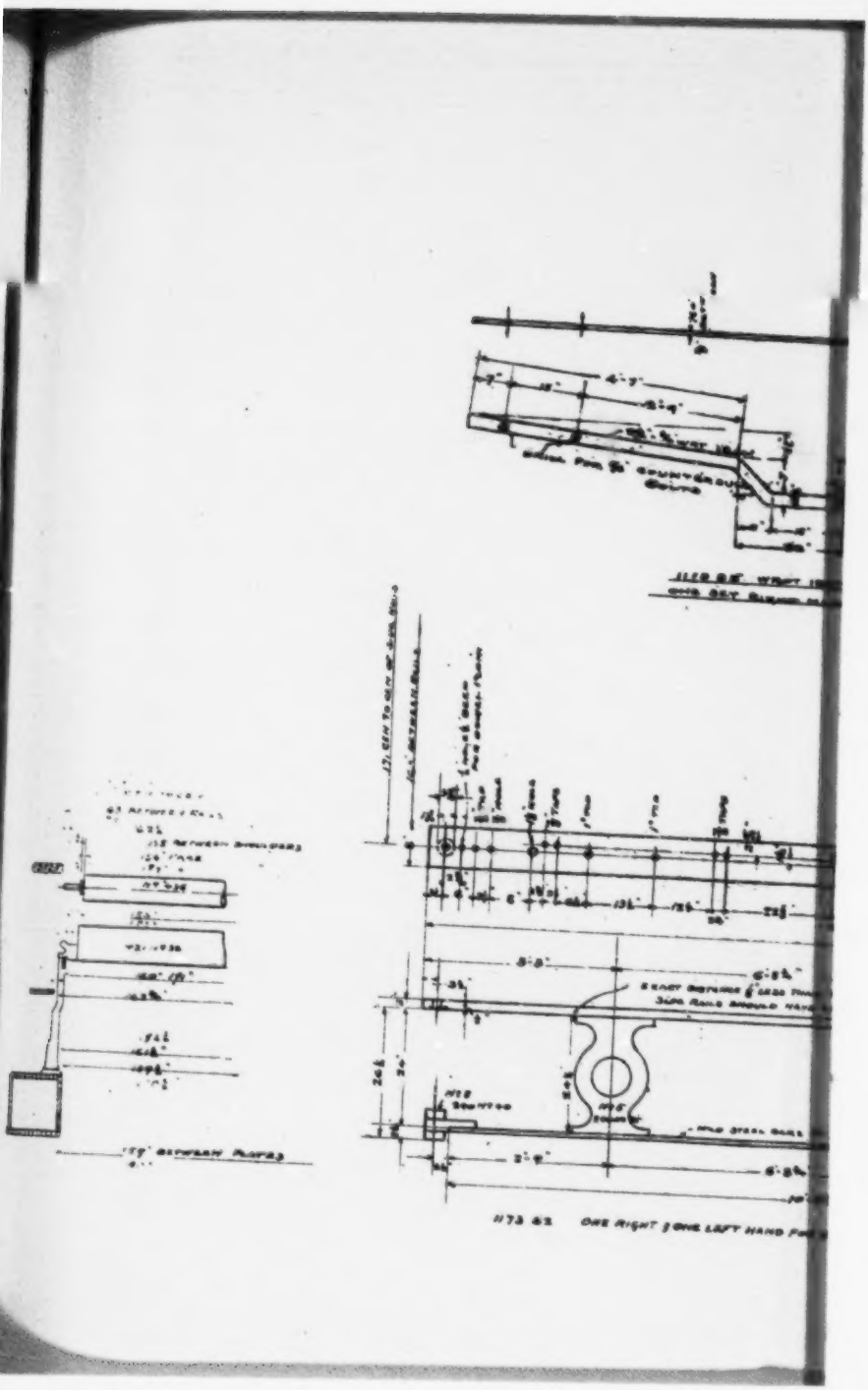

Defendant's Exhibit D
(Upper half)

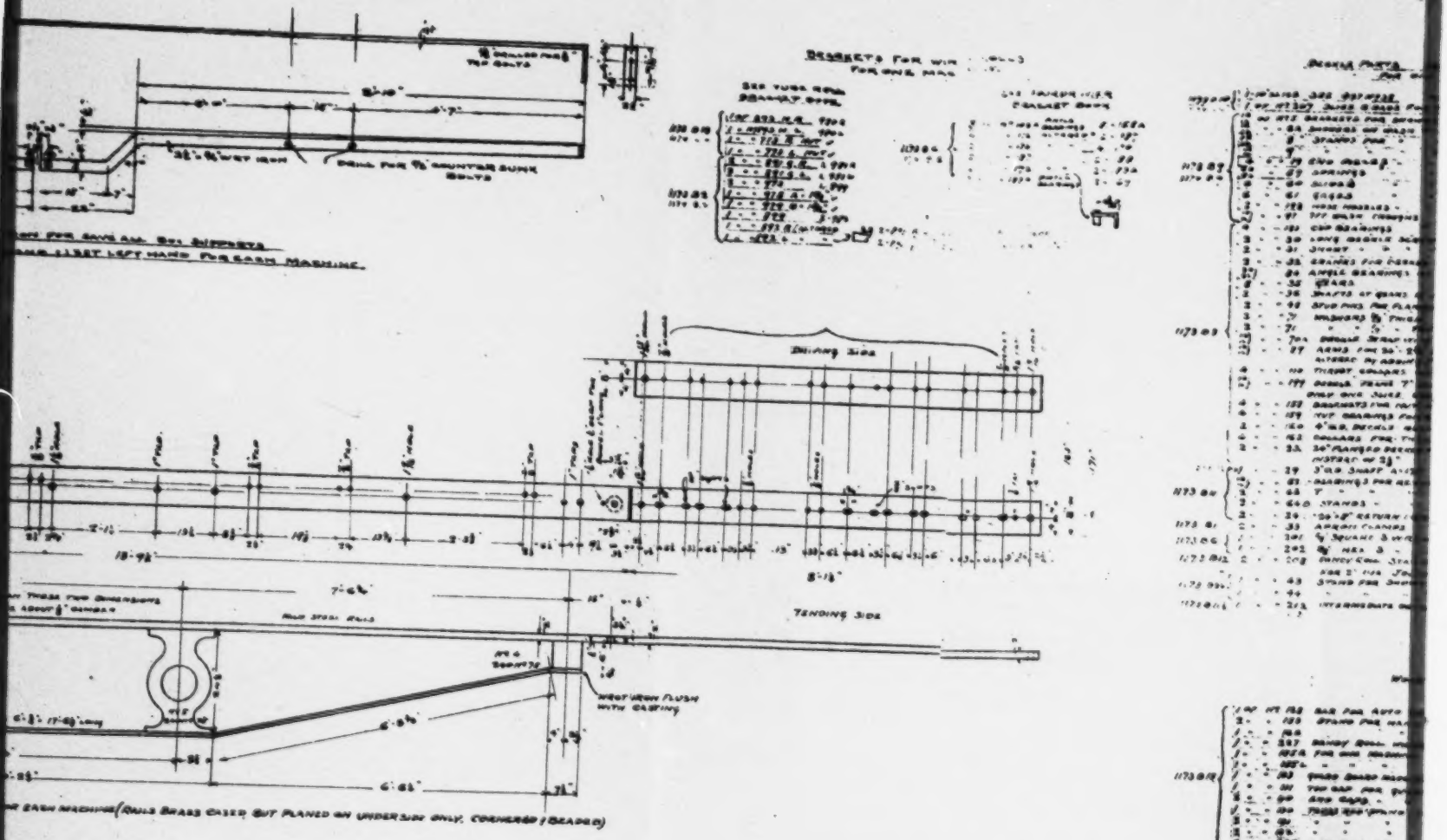

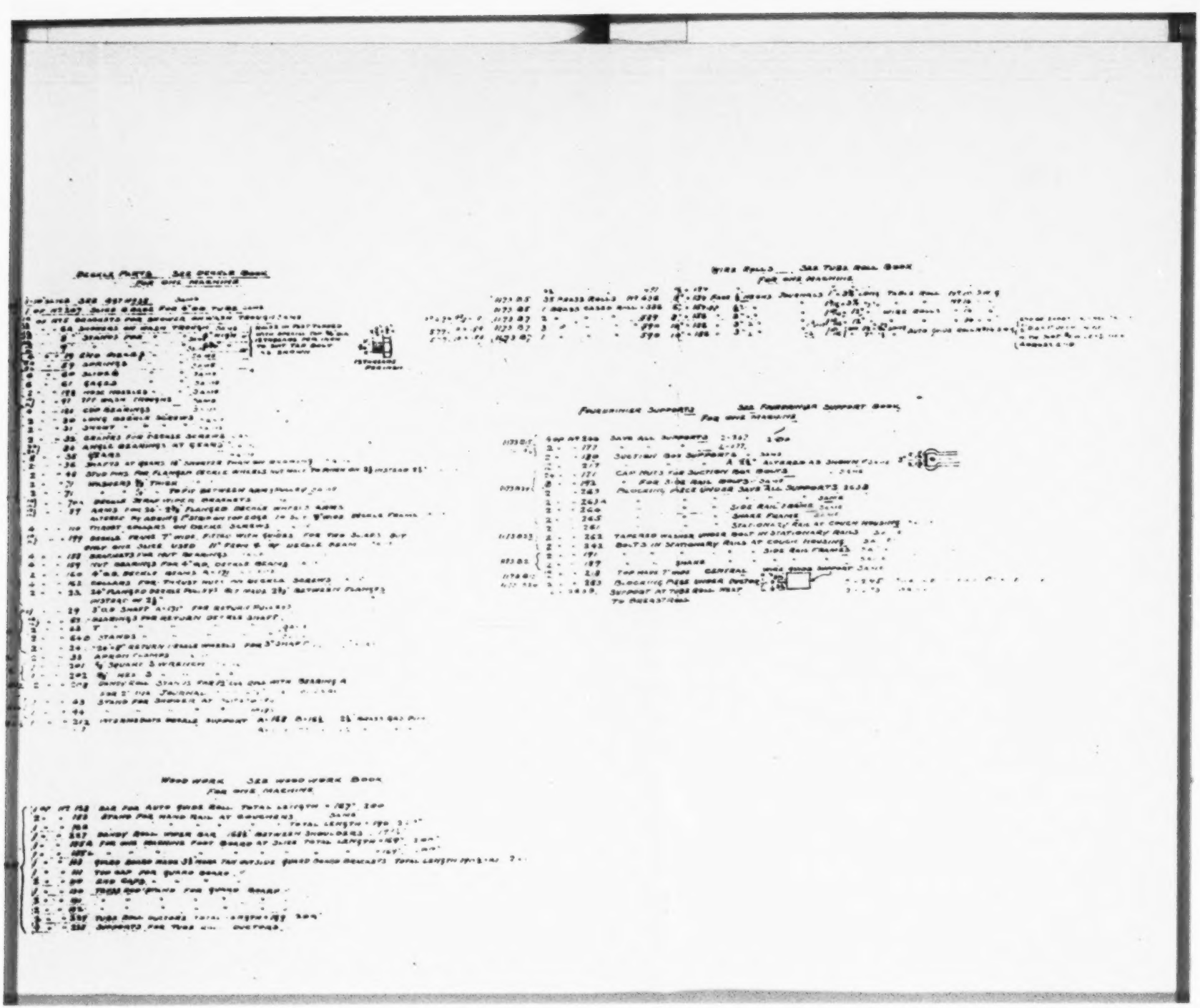

Deckle Parts — See Deckle Book
For One Machine

[illegible]

Wire Rolls — See Tube Roll Book
For One Machine

[illegible]

Fourdrinier Supports — See Fourdrinier Support Book
For One Machine

[illegible]

Wood Work — See Wood Work Book
For One Machine

[illegible]

FOURDRINIER ADJUSTING WRENCHES
240 No 31

LARGE SIZE THREE BEARING SHAKE HEAD
240 No 42

CONNECTING ROD 240 No 34

CENTRE OF SHAKE RAIL TO CENTRE OF SHAKE HEAD SHAFT

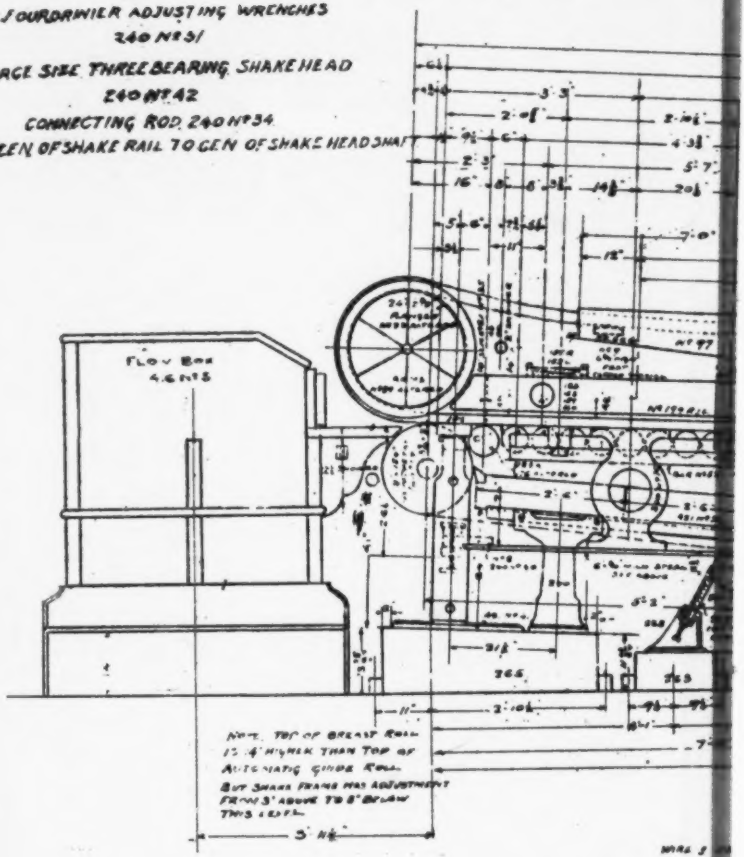

Defendant's Exhibit II
(Lower half)

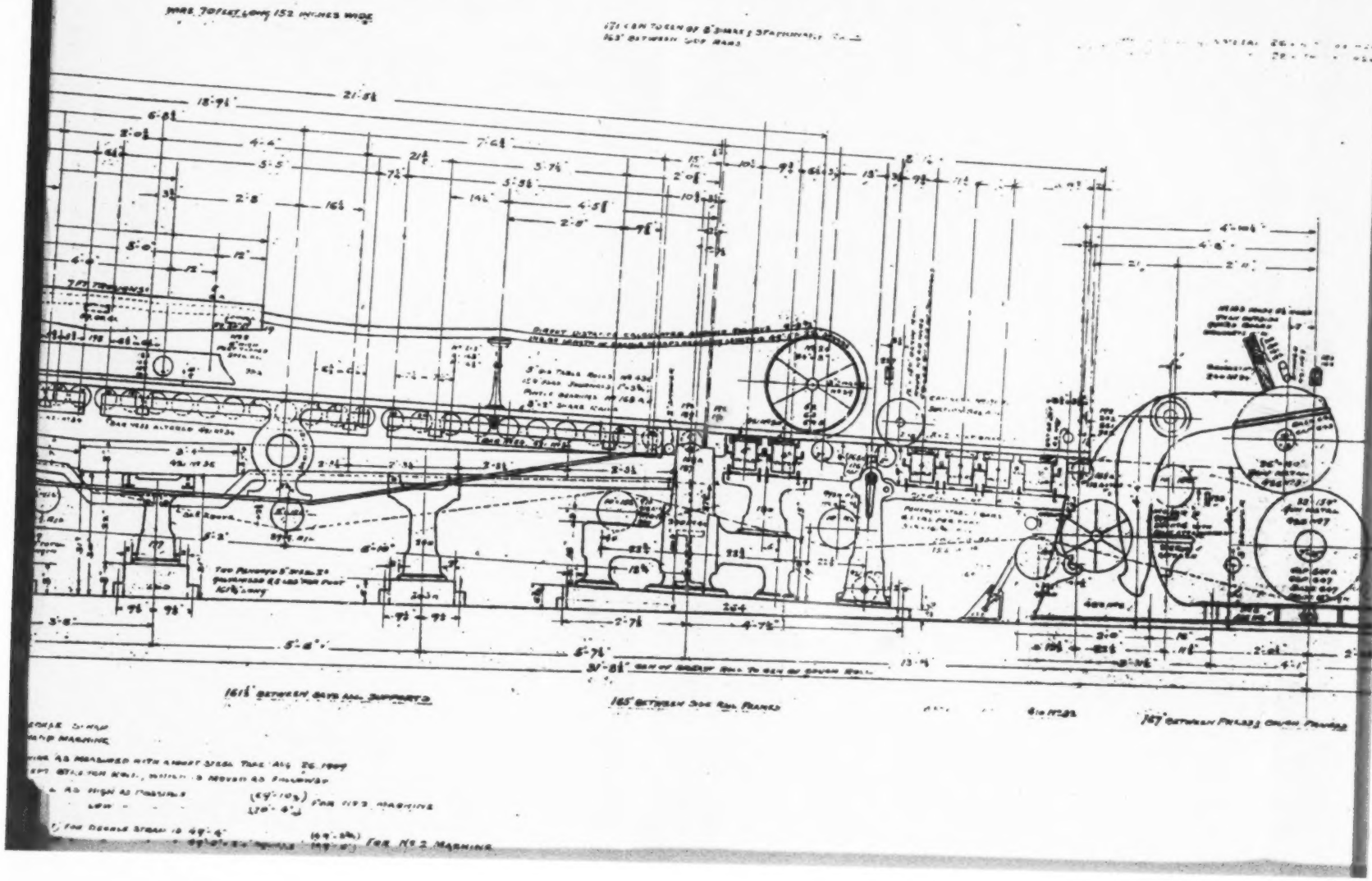

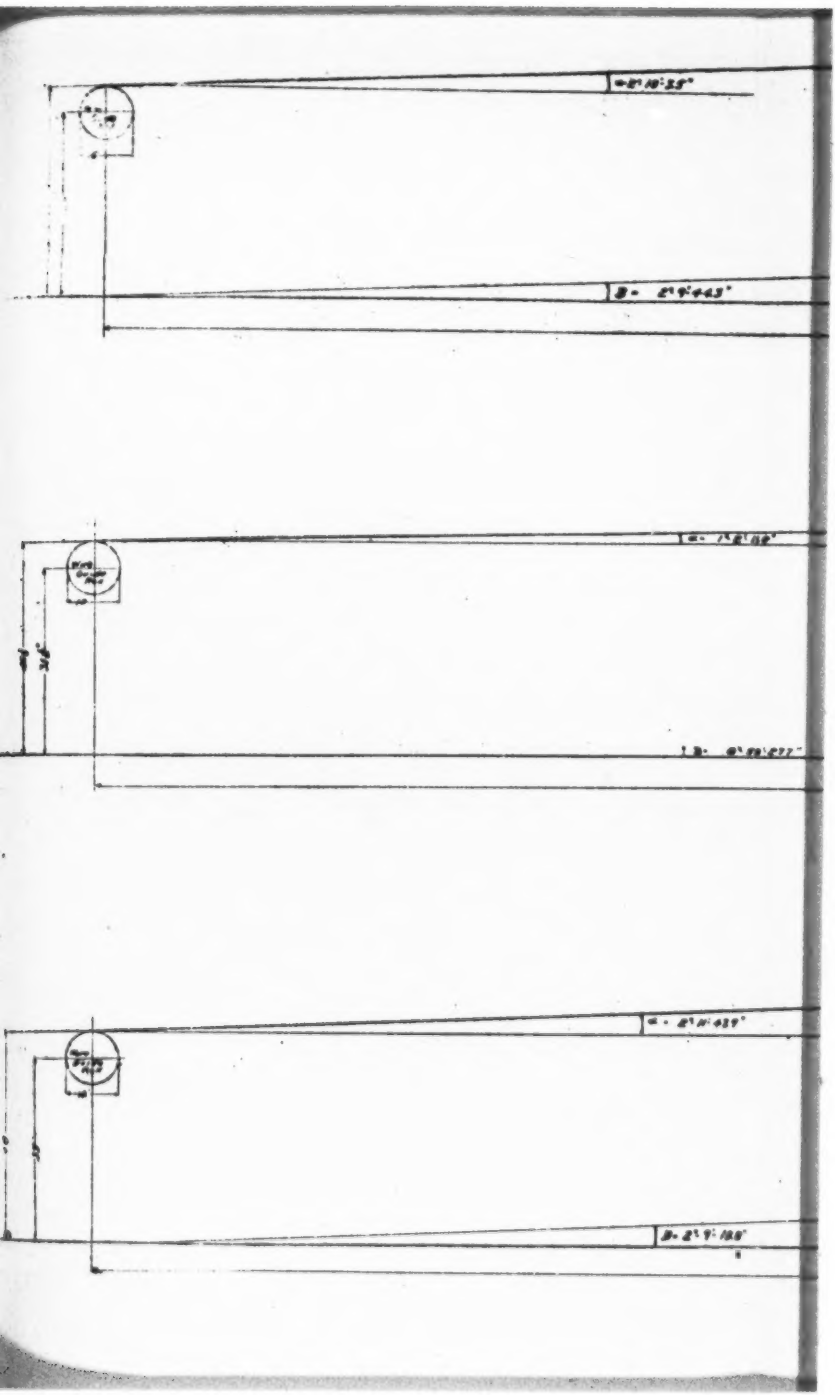

Defendant's Exhibit E.

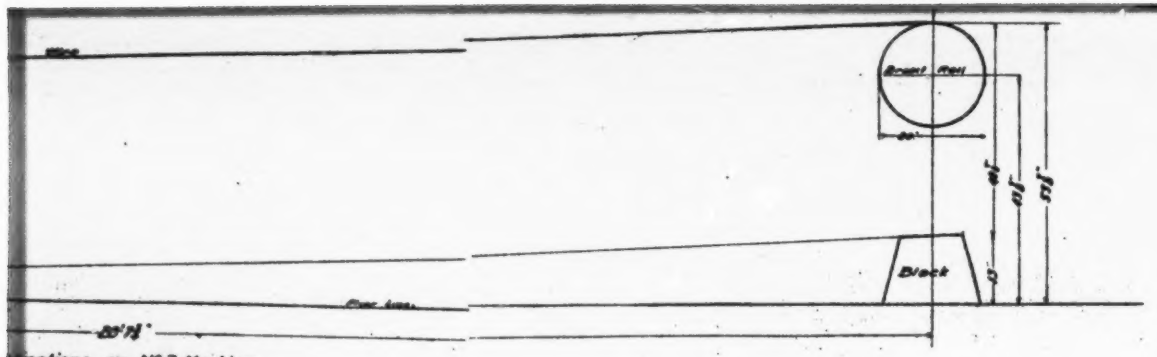

...inations on Nº 3 Machine.
...applies to Nº 4 Machine.

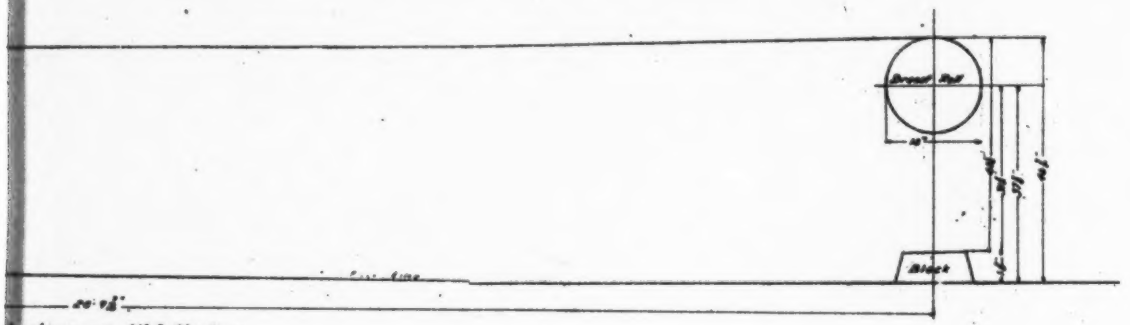

...inations on Nº 2 Machine

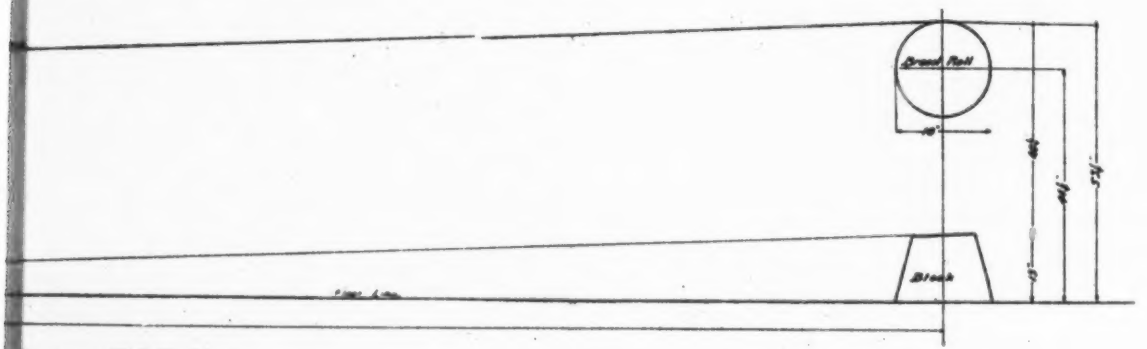

...tions on Nº 1 Machine

53		
40½"		
13½" = 13.025"	Log 13.025 = 1.1402629	Log 13.00 = 1.1139434
20'-7½" = 343.7500"	− 343.7500 = 2.5362427	− 343.75 = 2.5362427
	Log Tan α = 8.8040202	Log Tan B = 8.5717007
	α = 2°-10'-35"	B = 2°-9'-443"

4½"	Tan α = 6.25 / 343.4375	Tan B = 5.875 / 343.4375
40½"		
4½" = 6.25"	Log 6.25 = 0.7958800	Log 5.875 = 0.7690071
20'-9½" = 345.4375"	− 345.4375 = 2.5383695	− 345.4375 = 2.5383695
	Log Tan α = 8.2575105	Log Tan B = 8.2306384
	α = 1°-2'-118"	B = 0°-58'-277

53½	Tan α = 13.25 / 343.4375	Tan B = 13.00 / 343.4375
40		
13½ = 13.25	Log 13.25 = 1.1222159	Log 13.00 = 1.1139434
20'-9½" = 345.4375	− 345.4375 = 2.5383695	− 345.4375 = 2.5383695
	Log Tan α = 8.5838464	Log Tan B = 8.5755739
	α = 2°-11'-479"	B = 2°-9'-108"

MINNESOTA & ONTARIO POWER CO
INTERNATIONAL FALLS, MINN

INCLINATIONS OF WIRE AND FRAME ON FOURDRINIER PART OF PAPER MACHINES

Drawn by: [illegible] Date: May [illegible]
Traced by: [illegible] Scale: 1"=1'
Checked by: [illegible] Approved: [illegible]
Revisions

Nº PM55

Defendant's Exhibit R-5

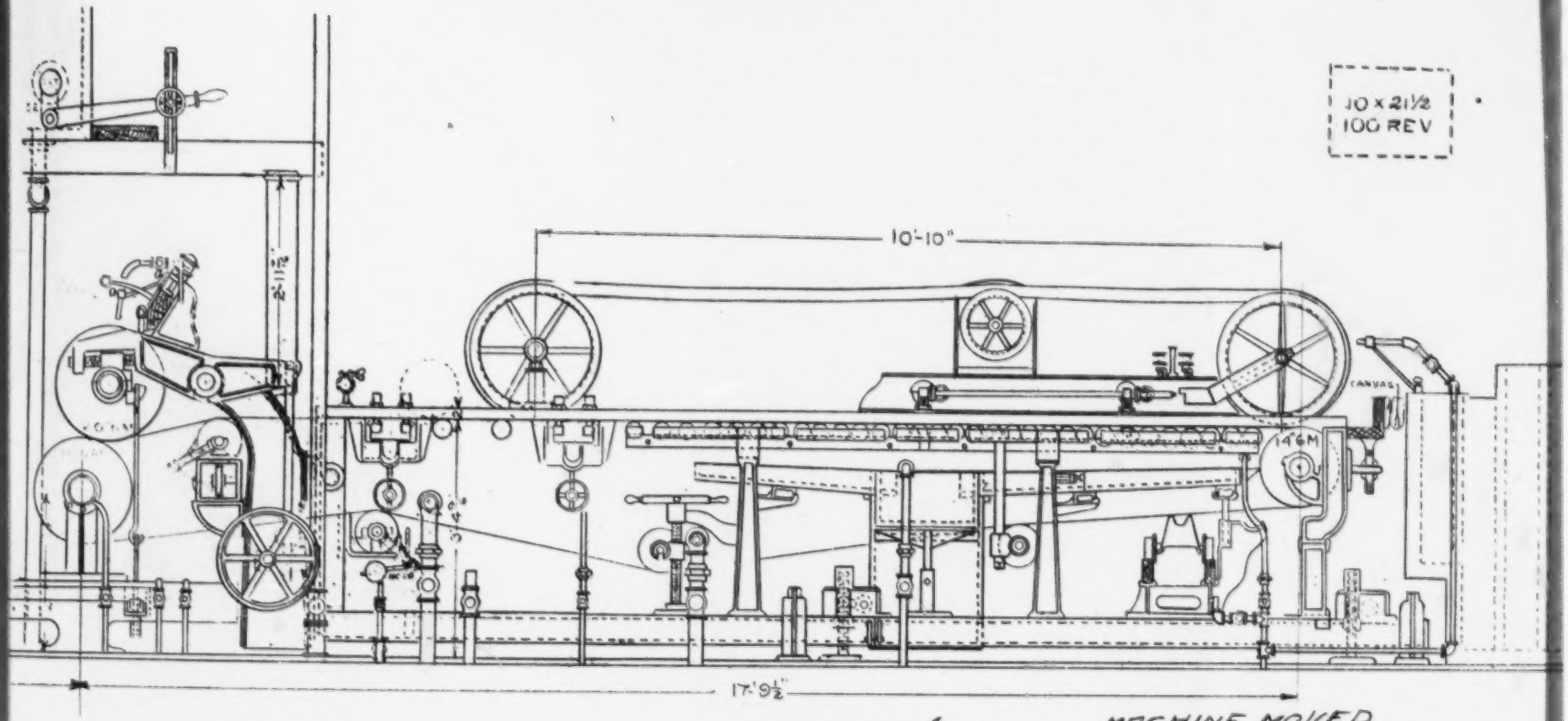

#2 Northern

MACHINE MOVED
2'-0" TOWARDS
CALENDERS

Defendant's Exhibit T

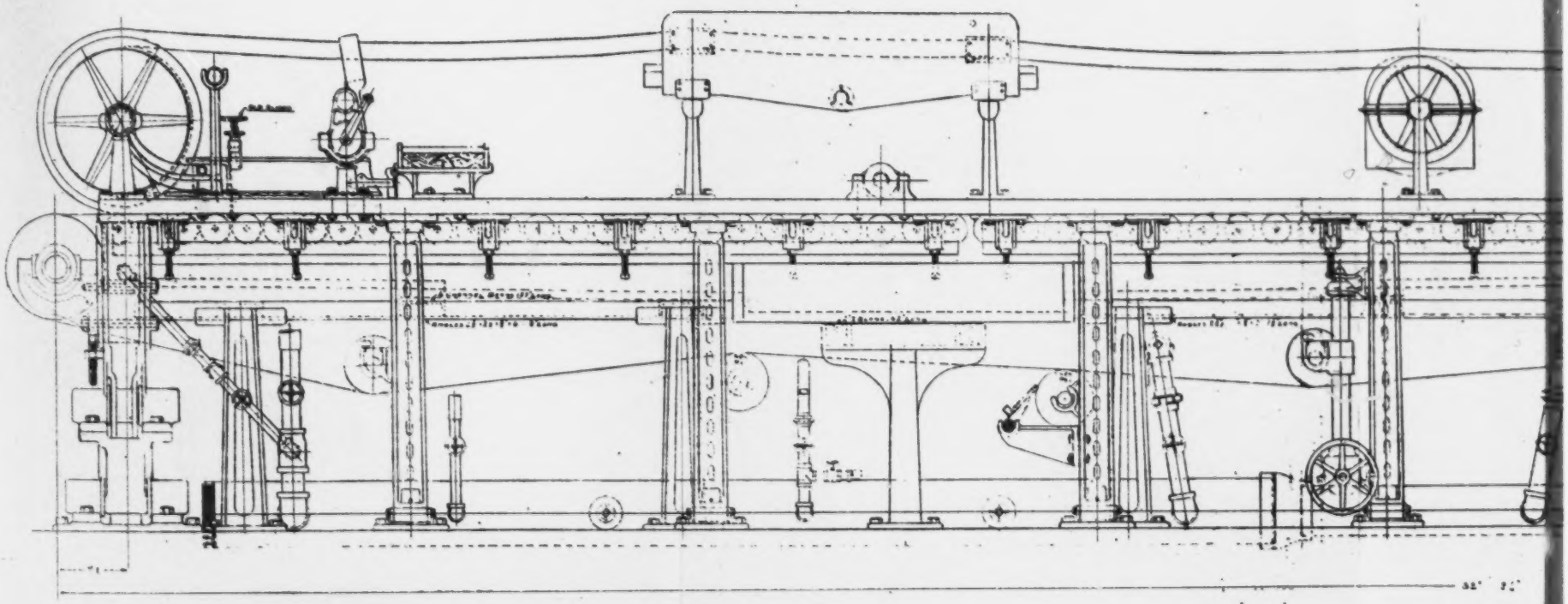

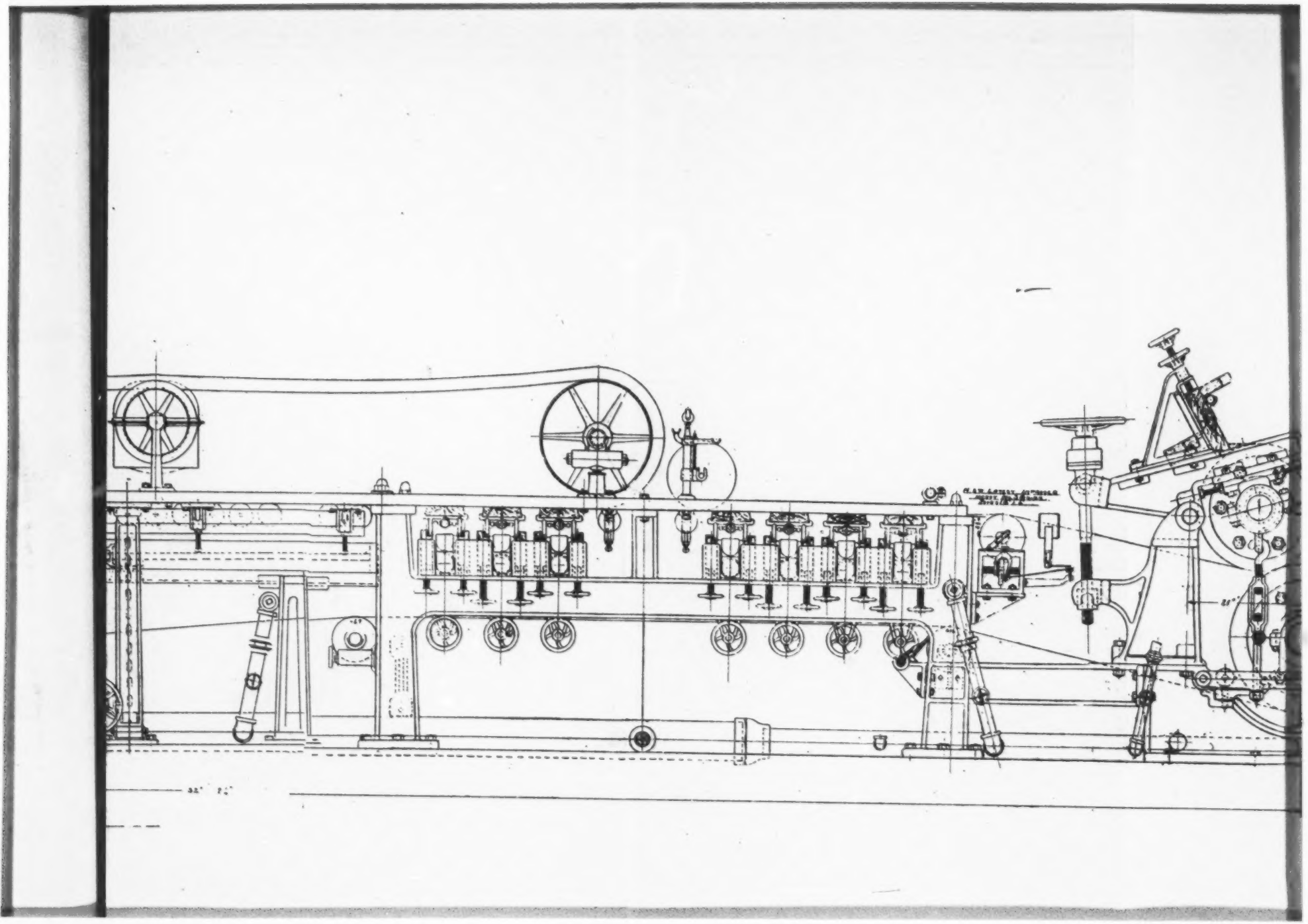

Any other construction might readily result in depriving a meritorious invention of its commercial value.

Carnegie Steel Co. v. Cambria Iron Co., 185 F. R. 403, 437.
Woerheide v. H. W. Johns-Manville Co., 215 F. R. 604; affi'd 220 F. R. 674.

In this connection our attention is called by appellants to the opinion of the High Court of Justice, Chancery Division, in European Eibel Co., Ld., v. Edward Lloyd, Ld., reported in The Illustrated Official Journal (Patents) Supplement, June 21, 1911, page 349, and by appellants to the action of the German Patent Office. While the opinions of foreign courts may often be helpful, the record before us does not afford the means for an accurate comparison of the issues and proof which were before the English court and those here presented, and, indeed, there is enough to indicate that there were some differences.

Haskell Golf Ball Co. v. Sporting Goods Sales Co., 210 F. R. 628.

In patent cases especially, differences of opinion may readily arise because of the nature of the subject-matter.

Mast, Foos & Co. v. Stower Co., 177 U. S. 488.
Baldwin v. Abercrombie, 228 F. R. 895.

As we conclude that Claims 1, 2 and 3 are valid and infringed, we deem it unnecessary, for the purposes of this case, to pass on Claims 7, 8 and 12.

The decree is reversed with costs.

(Here follow diagrams marked pages 127, 129, 131, 133, 135, 137, and 139.)

EXHIBIT T-3.

[Letterhead of Remington-Martin Co.]

Norfolk, N. Y., Oct. 1, 1904

Mr. S. T. Lansing, Watertown, N. Y.

DEAR SIR:

I am sending you under separate cover some samples made on 100" machine, at a speed of 585 ft. per minute. Trust these will satisfactory. I did not care to slow the machine down to 540 ft. order to get samples out at that speed.

Yours truly,

A. J. LEWTHWAITE

Answered Oct. 3, 1904.
S. D. L

EXHIBIT T-4.

[Letterhead of the Laurentide Paper Company, Ltd.]

Grand Mere, P. Q.,
Canada, October 11, 1904

Mr. Stewart D. Lansing,
Watertown, N. Y.

DEAR SIR:

I want to thank you for your letter of October 3rd enclosing s ples of paper made at Remington & Martin Co.'s at a speed of ft. per minute. I am naturally very much interested in this subj as we are doing quite a little in the speed line ourselves, at pres and in a short time think we will be able to give you some fig and also samples that will be interesting to you, from both a p of high speed and high quality. I think you have every reason be proud of your machines, because they are certainly built w an idea of maintaining high speeds and getting out good pro tions. I only wish that we had stuck to the three presses and on about 32 or 34 dryers. We then could have reached the ft. mark. Even at our speed of 553 ft., we are finding no difficul in turning out 25 tons a day on your machine.

Yours very truly,

GEORGE CHAHOON, JR.,
Vice-Presiden

O. K. Read by S. D. L.
No reply needed.

EXHIBIT T-3.

[Letterhead of Remington-Martin Co.]

Norfolk, N. Y., Oct. 1, 1904.

Mr. S. T. Lansing, Watertown, N. Y.

DEAR SIR:

I am sending you under separate cover some samples made on the 100" machine, at a speed of 585 ft. per minute. Trust these will be satisfactory. I did not care to slow the machine down to 540 ft. in order to get samples out at that speed.

Yours truly,

A. J. LEWTHWAITE.

Answered Oct. 3, 1904.
S. D. L

EXHIBIT T-4.

[Letterhead of the Laurentide Paper Company, Ltd.]

Grand Mere, P. Q.,
Canada, October 11, 1904.

Mr. Stewart D. Lansing,
Watertown, N. Y.

DEAR SIR:

I want to thank you for your letter of October 3rd enclosing samples of paper made at Remington & Martin Co.'s at a speed of 585 ft. per minute. I am naturally very much interested in this subject, as we are doing quite a little in the speed line ourselves, at present, and in a short time think we will be able to give you some figures and also samples that will be interesting to you, from both a point of high speed and high quality. I think you have every reason to be proud of your machines, because they are certainly built with an idea of maintaining high speeds and getting out good productions. I only wish that we had stuck to the three presses and put on about 32 or 34 dryers. We then could have reached the 600 ft. mark. Even at our speed of 553 ft., we are finding no difficulties in turning out 25 tons a day on your machine.

Yours very truly,

GEORGE CHAHOON, JR.,
Vice-President.

O. K. Read by S. D. L.
No reply needed.

DISCUSSION OF WIDE HIGH SPEED FOURDRINIERS

inions of Builders and Manufacturers

ODUCE BETTER PAPER

Speed and Superior Stock Gives Results Desired—More and Higher Quality Paper

...plying with your request, asking that I ...you my personal views on the question ...her wide machines are more advanta... for the user than machines of small or ...n width, I would say that it is a sub... which, if I made a definite statement ...o certain width of machine was the most ...able, all things considered, for the ...facturer, to prove this the exceptions ...necessarily be discussed, and the ex... might develop to the most numerous ...because there are so many conditions ...manufacture of paper, owing to the use ...of machines by certain mills who did not take into consideration what the increase in width really meant to the machinery, and the results on the early wide machines were very unsatisfactory. With us, having full confidence in our judgment that the faults and disfavor of the early wide machines are wholly due to improper construction, we developed the successful machine as it is known to-day, and of which we have nine (9) in operation 160 inches or wider. These machines are constructed to stand the strains and wear and tear due to continuous operation, and have been most satisfactory to the purchasers, and we believe that they are the most practical investment for the paper manufacturer, as outlined above, who desires to make news or manilas. They are expensive machines apparently, but cost less per ton of production than smaller machines, and as we have built them, produce a better sheet of paper, and with the Warren winder, put same in perfect rolls for shipments whether they are rolls 9 inches wide or 75 inches wide, and whether they are 12 inches in diameter or 36 inches in diameter, will certainly be made on the lines of the wide machine.

The foregoing treats entirely of the width of the machine. Your other question is on the matter of speed. We thoroughly believe in the high speed machine for the manufacture of news paper. We have run our machines through a period of years constantly at a speed upwards of 550 feet a minute, and have had some machines which have made paper satisfactorily at 580 feet a minute, and the fastest at 618 feet a minute. We have built these machines with the idea of keeping the strength to a point that will permit of the speed and reduce the wear and tear to a minimum, and the one limit which we have been brought against is the quality of the stock used by the paper makers. We believe and can show as concerning the quality of the sheet, and decided that the one way was to slow the machines down, which was done to 400 feet each. The sheet improved a little bit, but not enough for the user to notice. Consequently the manufacturer was in a state of general anxiety for his trade, and in fact, lost a large portion. He determined then that the trouble must be with his stock. Immediate attention was given to the ground wood mill, every care used in the proper preparation of the wood and in the grinding, and the difference was seen immediately in his sheet, and within a few days the whole mill was on to a basis of making a sheet of news paper that compared with the best made in the United States. Within a week the speed on the machines was increased 50 feet, and within a month all the

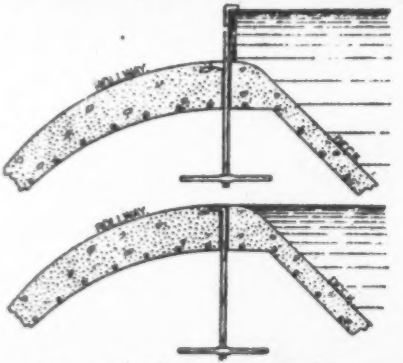

FIG. 5.—CONTROL OF FLASH BOARDS

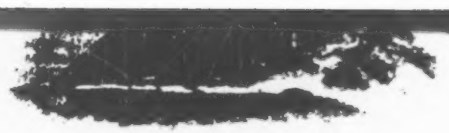

FIG. 3.—DAM OF MISSISQUOI PULP CO., SHELDON SPRINGS, VT. CROSS SECTION

which it is put, which, to a certain degree, regulate its width.

Another great class of exceptions would be the class of papers which are constantly varying in color, and for the convenience in this matter, small machines are certainly now and will be in highest favor.

Confining ourselves, then, to the papers which have not the two reasons mentioned above for limiting the width of the machine, I will state that for news and manilas, our experience has been most happy with the wide machines, and we do not believe that our customers who have these wide machines would, in the future, consider the installation of machines less than 152 inches to 164 inches in width, according to their market, and without any consideration of the success of the machine whether it was 152 inches or 164 inches.

This is largely due to the fact the we have built our machines especially for the great strain and the severe duty which is required of them on these great widths. We have kept in view for many years the development of the strength of the machine in all its parts, so that it can be driven to the highest speed at which a paper maker can handle the sheet, and perform this daily, day in and day out, month by month, and year by year, and I am free to say that of all the wide machines we have put out, there is not one that is not performing way beyond the expectations of the purchasers.

Fear of the wide machines was pretty thoroughly inculcated into American paper makers through unwise increase in the width and I firmly believe that our trade will continue on the lines of the wide machines. The European market has apparently appreciated this fact, and we have shipped in the last year three machines 166 inches wide abroad, and have orders for others.

There has been some misunderstanding lately regarding the nomenclature as used in America designating and describing the paper machine.

Until recently we have understood that all paper makers designated the width of machines in America by the width of the wire. Recently we have discovered that some people describe a machine according to the width of the breast roll, and while this makes very little difference if all parties to the transaction understand, yet there is some danger that misapprehension may exist as to the width of the machine. For instance, we have always called the four machines which we have in operation at the Berlin Mills Company 164-inch machines, but that is the width of the wire, which is usually run on the machines. Under the designation by the breast rolls the machines are 166 inches wide, and if we took the widest roll in the machines, they would be 194-inch machines.

The installation at Berlin Mills undoubtedly has been seen by a great many paper makers in the United States, and we consider it the banner installation of the world, and we have every reason to believe that the Berlin Mills Company has the least expensive equipment per ton of production of any mill in the world, and further, our opinion is that any increase in the equipment for making paper at Berlin mills, and which produces the [illegible] sheets so frequently seen on the market.

The first cost of our high machines, of course, is greater than the machines made by many of our worthy competitors, but the expense of operation and for repairs and clothing used, is much less per ton than those on the slower machines, and therefore we believe thoroughly that high speed machines for news are the machines of the future, and to give a fair example yet forcible instance of this, the following occured at one of the mills where we have a large installation of machines. News paper was being made at a speed averaging 500 to 530 feet per minute. The quality was poor. The owners had complaints concerning the sheet of paper is, is yet undetermined.

STUART D. LARSON.

SPEED AND PRODUCT.

"Let me remark that speed and product don't always mean the same thing, which fact, no doubt, has been discovered by many mill proprietors, to their sorrow. This is due principally to machines that are not properly designed and constructed, and secondly, to other well-known reasons, which I deem advisable not to mention here.

"In this enlightened age it should not be necessary to state that designing and building

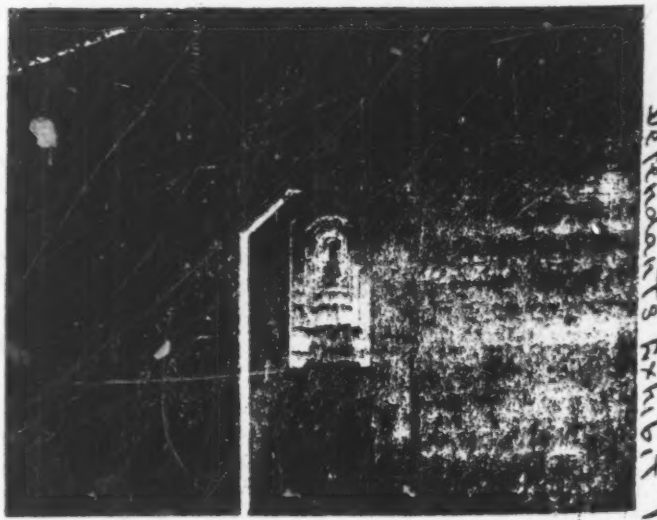

FIG. 3.—DAM OF MISSISQUOI PULP CO., SHELDON SPRINGS, VT. -RUNWAY

Defendant's Exhibit No. 143

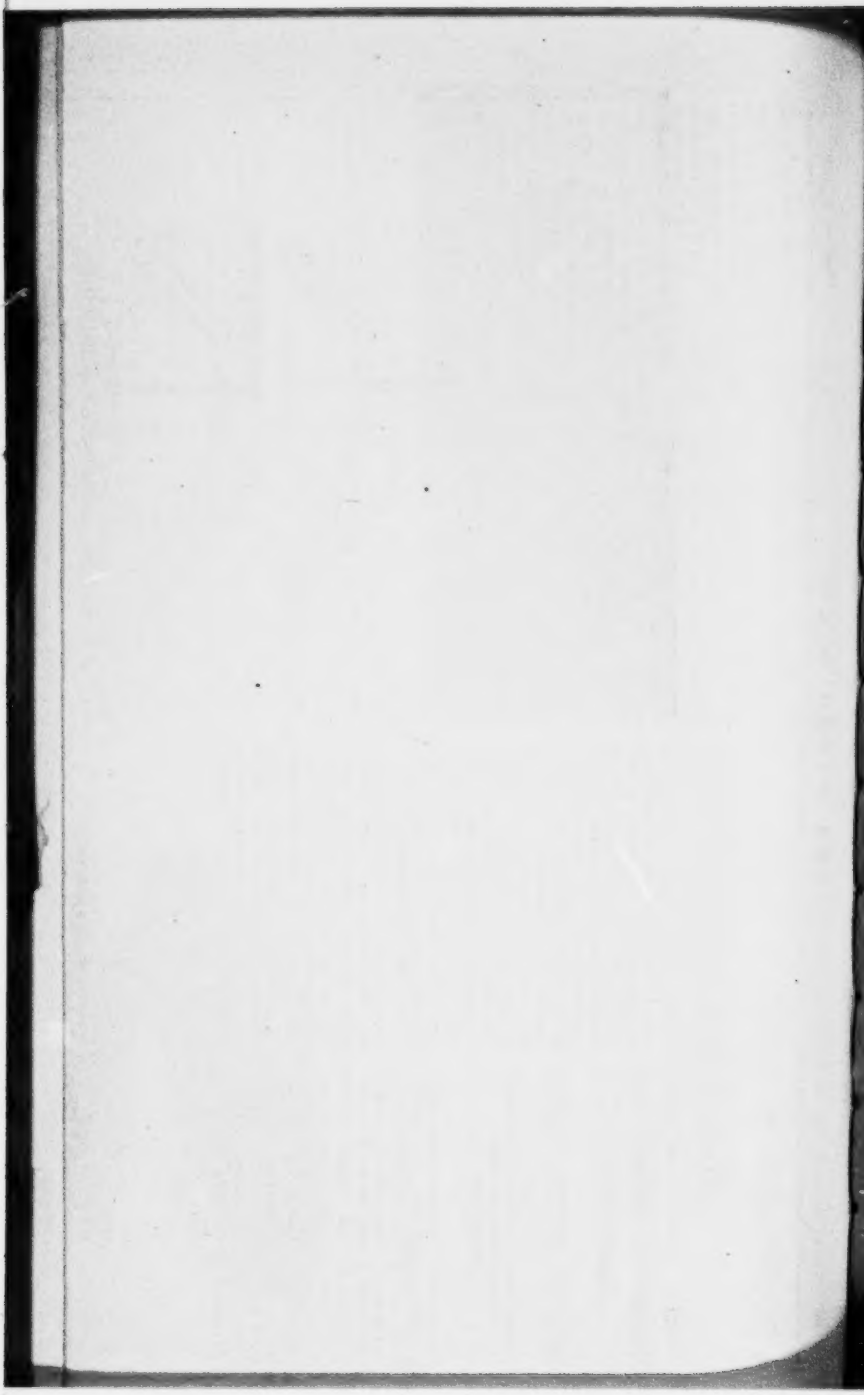

A 100 Bagley Machine

Has made news paper at 618 feet per minute

Accessory Machines for Paper Mills

We make a specialty of building special machines applicable to our paper making machines, to machines of other makers, and in connection with old machines which are desired to be brought up to date.

Warren two drum Winders.
Single-drum Winders.
Compensating Winders.
Two drum Stack Reels.
Three drum Stack Reels.
Revolving Reels.
Slitting Machines.
Calenders.
Floor Drives, Quill type, self contained.
Floor Drives, Heavy Loose Pulley type, self contained.
Floor Drives, Medium Loose Pulley type, self contained.
Floor Drives, Light Loose Pulley type.
Press Rolls.
Suction Box Covers.
Brass Tube, Iron and Galvanized Rolls.
Pumps, Stuff 10 x 10 Triplex, Style A.
Pumps, Stuff 8 x 10, Triplex, Style C.
Pumps, Stuff 8 x 10 and 6 x 10 Triplex, Style B.
Pumps, Stuff 8 x 10 and 6 x 10 Duplex, Style B.
Pumps, Stuff Single Plunger Post Pumps.
Pumps, Centrifugal
Pumps, Fan.

The Bagley & Sewall Co.

WATERTOWN, NEW YORK

Paper Making Machinery Builders

PATENT

Warren Winder

DOUBLE DRUM

The Warren Winder for large rolls, small rolls and intermediate rolls has displaced every make of winder on the market.

A dozen rolls come apart as easily as two.

A patent guard prevents injury to the operator.

In use on News, Book, Bag, and Manilla.

Write for Catalog.

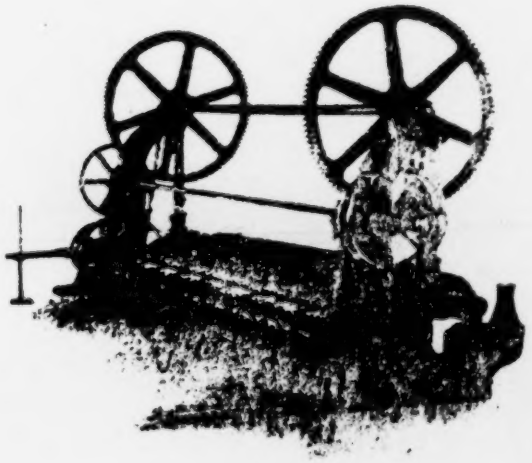

The cut shows a Warren Winder without Slitting Machine attached. Built with Slitting Machine attached when desired.

Plaintiff's Exhibit P-7

143

Defendant's Exhibit T-8

Theoretical spouting velocity of water due to the head, or height:

Head Inches	Feet	Velocity Feet per second	Velocity Feet per minute
1	.0833	2.30	138.6
2	.1667	3.26	195.6
3	.25	4.01	240.6
4	.3333	4.61	276.6
5	.4166	5.14	308.4
6	.5	5.67	340.2
7	.5833	6.11	366.6
8	.6666	6.52	391.0
9	.75	6.95	417.0
10	.8333	7.31	438.6
11	.9167	7.65	459.0
12	1.	8.03	481.8
13	1.083	8.34	500.4
14	1.166	8.64	518.4
15	1.25	8.98	538.8
16	1.33	9.25	555.0
17	1.417	9.57	574.2
18	1.5	9.83	589.8
19	1.583	10.10	606.0
20	1.666	10.32	619.2
21	1.75	10.60	636.0
22	1.8333	10.85	651.0
23	1.9167	11.12	667.2
24	2.00	11.40	684.0
25	2.0883	11.59	695.3
26	2.1667	11.82	709.2
27	2.25	12.05	722.7
28	2.3333	12.26	735.7
29	2.4166	12.48	748.95
30	2.5	12.695	761.7
31	2.5833	12.843	770.88
32	2.6666	13.113	786.78
33	2.75	13.31	798.60
34	2.8333	13.52	811.20
35	2.9167	13.714	822.84
36	3.00	13.90	834.00
37	3.0833	14.10	846
38	3.1666	14.288	857.34
39	3.25	14.476	868.56
40	3.3333	14.66	879.60
41	3.4166	14.843	890.58
42	3.5	15.016	900.96
43	3.5833	15.199	911.94
44	3.6666	15.374	922.44
45	3.75	15.549	932.94
46	3.8333	15.721	943.20
47	3.9167	15.89	953.40
48	4.0000	16.06	963.60
49	4.0833	16.213	972.78
50	4.1666	16.389	983.34
51	4.25	16.549	992.94
52	4.3333	16.71	1002.60
53	4.4166	16.87	1012.20
54	4.5	17.0316	1021.92

See "Trautwine's Engineer's Pocket Book," Page 258, 1900 Edition.
Deft's Ex. T-8.

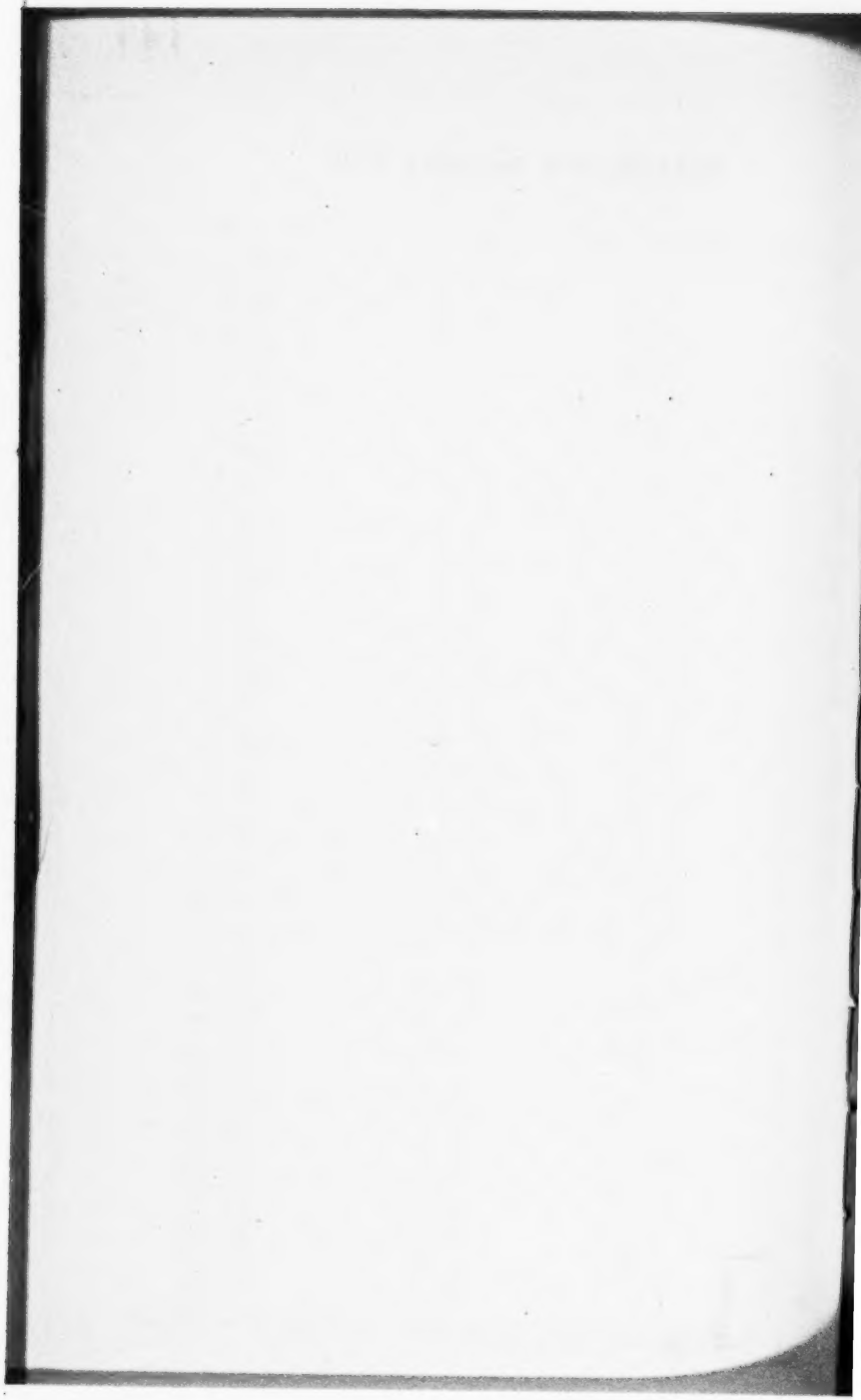

EXHIBIT T-5.

[Letterhead of the Laurentide Paper Company, Ltd.]

Grand Mere, P. Q., Canada, January 28, 1905.

Bagley & Sewall Co.,
Watertown, N. Y.

GENTLEMEN:

In reply to your letter asking for the results we have been able to get from your last machine, we are glad to say that they have been most satisfactory.

The machine was started in August and therefore we do not think it has yet reached its maximum production, although the daily averages for the past few months have been beyond our original expectations. This machine was started at 503 ft. per minute and after running at this speed for two weeks, was put up to 553 ft. which speed has been maintained ever since. Believe the machine is capable of making good paper at faster speed than this, but as our motor is about up to its capacity, it is impossible for us to run faster.

I want particularly to tell you of our appreciation of the drive on this machine, to which we think the large productions and high speeds are mainly due. We think this is about the smoothest running and best designed drive we have ever seen.

The machine has not been running long enough to enable us to give you any figures on the small amount it is costing to keep it in repair, but we feel, [notwithstanding the serious disadvantages you were working under while building this machine, that you should]* be congratulated [on being able to confine all of these troubles to your own shows, and have no trace of them]* in the workmanship and results of the machine.

Yours very truly,

THE LAURENTIDE PAPER CO., LTD.,
GEORGE CHAHOON, JR.,
Vice-President.

(Here follow diagrams marked pages 143, 145, and 147.)

[*Words enclosed in brackets erased in copy.]

EXHIBIT T-13.

[Letterhead of Rhinelander Paper Co.]

Rhinelander, Wis., Feb. 18th, 1907.

Bagley & Sewall Co., Watertown, N. Y.

GENTLEMEN:

Please advise if you build anything in the way of an adjustable Fourdrinier end. If so, please state how much pitch can be obtained on the wire with the breast roll below the level. Also, if a pitch above the level can be obtained and how much. Does this pitch effect the position of the suction boxes or does it just work up to them?

Thanking you for a prompt reply, we remain,

Yours truly,

G. L. A. RHINELANDER PAPER CO.

Answered Feb. 22 1907.
S. D. L.

(Here follows diagram marked page 151.

Deft's Ex. U-2"
151

THE "MOORE & WHITE" SUSPENSION SHAKE

FOR FOURDRINIER MACHINES

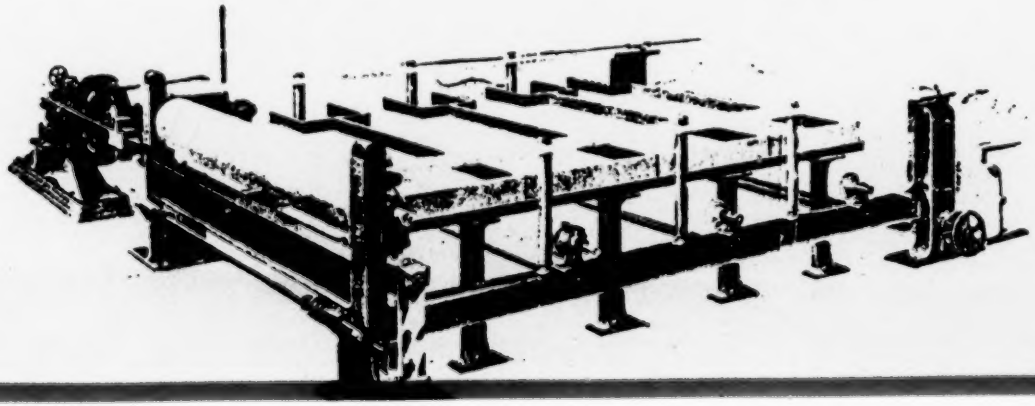

DEFENDANT'S EXHIBIT U-2.

[Page 2 of Exhibit U-2.]

(Thoroughly Tested for Four Years.)

Many Now in Use Giving Splendid Satisfaction.

The cut shows the "Suspension Shake" Applied to the Regular ırdrinier Machine, utilizing top rails, rolls, suction boxes and e-alls.

Can be applied to Any Machine in Use, doing away entirely with joints and lost motion, there being Absolutely no Wearing Parts the shake. There is comparatively no wear in shake post, as power required is very little. A person could vibrate it by the htest effort. The Length of Stroke of Shake, the Number of okes per Minute can be Changed in a Moment while Running. ake post fitted with friction clutch for stopping and starting. ch of Table from breast roll to suction boxes Can be Varied either ve or below a horizontal line in a moment while running.

No machine is up to date without this improvement. The cost very reasonable, being but little more than the repairs required m time to time. The oscillating strain on the journals of all the ls being removed, the journals are not likely to break and rolls n much more freely. A careful study will show many advantages.

[Page 3 of Exhibit U-2.]

Read These Testimonials.

The Jessup & Moore Paper Co.

Philadelphia, Penna., March 7, 1900.

ssrs. Moore & White Co., Philadelphia, Pa.

NTLEMEN:

We take pleasure in writing you as to the merits of your Sus-sion Shake. It has been most satisfactory to us in every way, l results obtained from it have been excellent.

Yours truly,

THE JESSUP & MOORE PAPER CO.
W. H. SHARP,
President.

Dill & Collins,

Paper Makers.

March 6th, 1900.

Moore & White Co., 15th St. and Lehigh Ave., Philadelphia.

GENTLEMEN:

Replying to yours of the 5th inst., asking how we like the Suspension Shake on the 96" Fourd. you put in for us two years ago. We are more than pleased with it and think it is the best appliance of the kind we have ever seen. It seems to be as good in every way as the day it was put in and it has never given a moment's trouble since we started it. There are no journals connnected with it coming in contact with the water,—therefore, there is nothing to wear which is so objectionable in the other styles we have examined.

We are, yours truly,

G. C. DILL & COLLINS.

W. C. Hamilton & Sons,

Riverside Paper Mills.

March 15th, 1900.

Moore & White Co., 15th St. and Lehigh Ave., Philadelphia.

DEAR SIRS:

Replying to your inquiry of recent date, we would say that the three Suspension Shakes placed on our 78, 86 and 112 inch machines in 1896 have given us eminent satisfaction, from the start to the present time, and without any wear or repairs. As far as we can see there can be no wear.

We consider the motion as ideal, and would not be without your double adjustments of Shake and Vertical Lift for a large sum. The vibration in the going and returning wire, moving in the same plane, at the same moment of time, and the same distance certainly preserves the life of the wire. The smoothness of the shake or vibration, without back-lash, or jerking from worn parts, closes the stuff easily and perfectly and keeps the deckel edges up to weight as no other device which we have ever employed or seen elsewhere in use.

Very truly yours,

(C. L. H.) W. C. HAMILTON & SONS.

[Page 4 of Exhibit U-2.]

The Catawissa Fibre Company, Limited,

Manufacturers of Pure Fibre and Drab Express Papers.

Catawissa, Pa., Mch. 6th, 1900.

The Moore & White Co., Philada., Pa.

GENTLEMEN:

Replying to your esteemed favor of 5th inst., in reference to the new Suspension Shake with which you equipped our number one machine in overhauling same, we would say that we consider this new shake the best we ever used or have seen, and would willingly recommend same to the trade. Should you wish to refer any one to us we would be only too glad to give any desired information.

Yours respectfully,

CATAWISSA FIBRE CO., LTD.
HOWARD MACCREADY,

Elk Paper Company,

Paper Manufacturers.

Providence, Md., March 9th, 1900.

The Moore & White Company, Philadelphia, Penna.

GENTLEMEN:

I have used your Suspension Shake for about four years, and I find it one of the most reliable shakes to form a sheet of paper that I have ever used, and to any one desiring a shake I would cheerfully recommend this Suspension Shake.

Yours respectfully,

ELK PAPER COMPANY,
E. E. WEAVER,
Sup't.

Cumberland Mills, Me.

March 3, 1900.

Moore & White Co., Phila., Pa.

DEAR SIRS:

Referring to your kind favor of the 28th ult., we have to report that we have not yet received the taper cone pulley referred to. It has probably been delayed in transportation. Will you kindly ask your railroad agent to trace shipment.

In regard to the shakes, we are very much pleased with them and think they tend to lengthen the life of our wires. The motion is an ideal one, and while giving the very best movement to the Fourdrinier frame and inducing the fibres to weave together well while in suspension on the wire, the parallel motion of top and bottom rails favors the wire and does not tend to impair the wire as the twisting motion of the old shake does. We find also that there is some advantage in being able to readily adjust the height of the breast roll in relation to the suction boxes, thus giving the table more or less incline, according to the different kinds of stuff and different thicknesses, etc. of paper. This although of considerable advantage when many kinds of stock are run on the same machine, does not admit of very frequent changes with advantage, as the ordinary (and perhaps also the superior) machine tender is apt to dicker with it too much unless restrained in some measure. However, the device is a very convenient one and well worth adoption where it can be adopted.

Yours truly,

JOHN E. WARREN.
CRAIGIE.

References:
M. & W. H. Nixon Paper Co., Manayunk, Pa.
Merrimac Paper Co., Lawrence, Mass.

(Here follow diagrams marked pages 157, 159, 161, 163, 165, 167, 169 and 171.)

Defendant's Ex

BAYLESS PULP & PAPER CO.,
AUSTIN, PA.

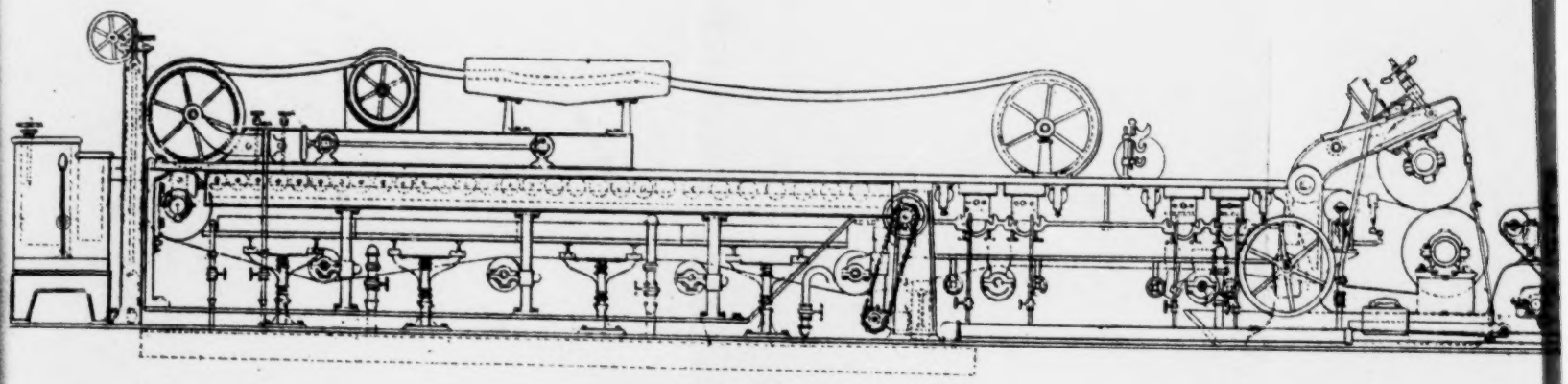

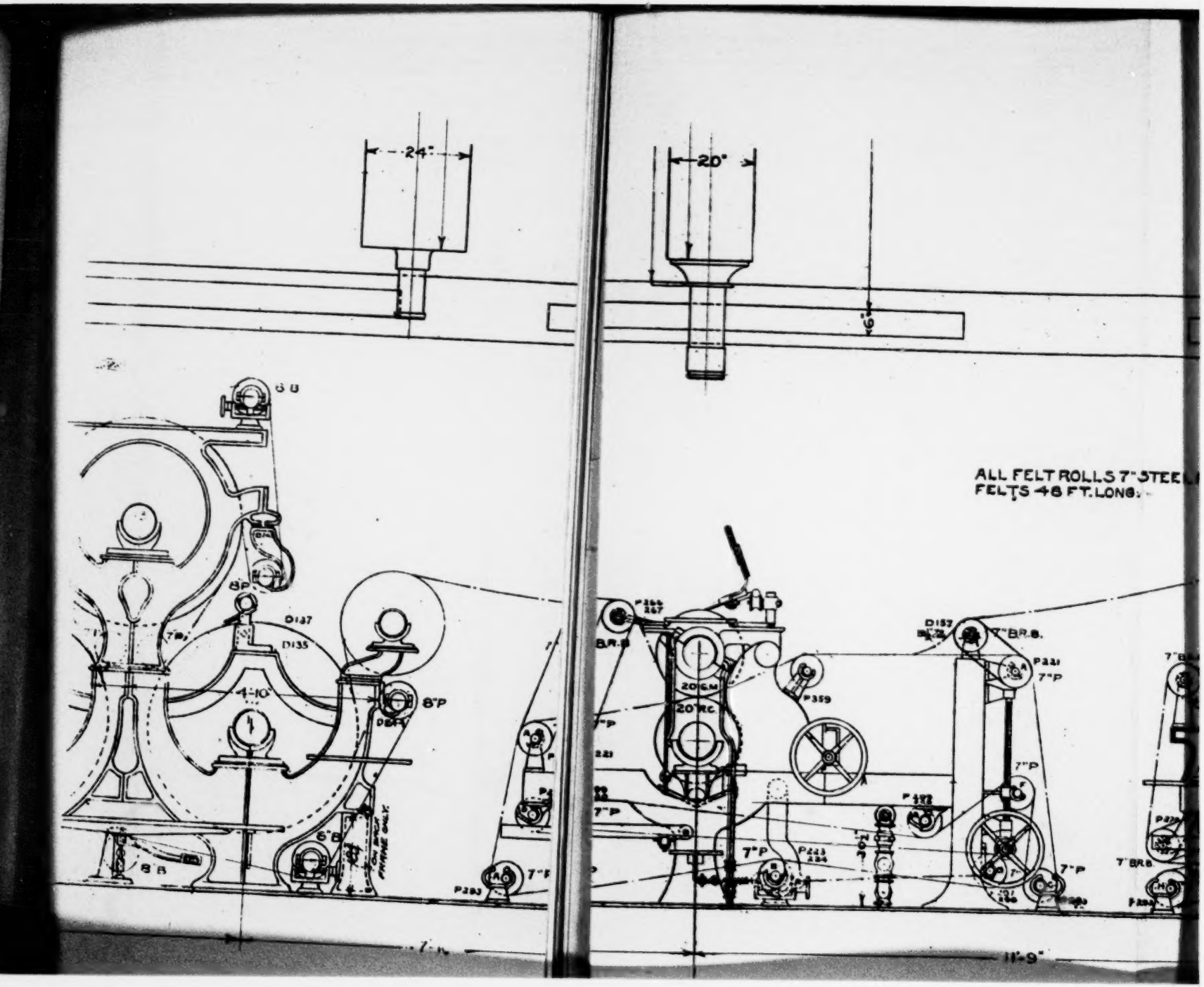
24"
20"
6"
ALL FELT ROLLS 7" STEEL
FELTS 48 FT. LONG.
6 B
8P
D137
D135
4'-10"
8"P
6"B
8 B
7"P
P283
7"P
P359
20 G.M.
20 R.C.
7"P
P223
224
7"P
D157
7"B.R.B.
P221
7"P
7"P
7"P
7"B.R.B.
11'-9"

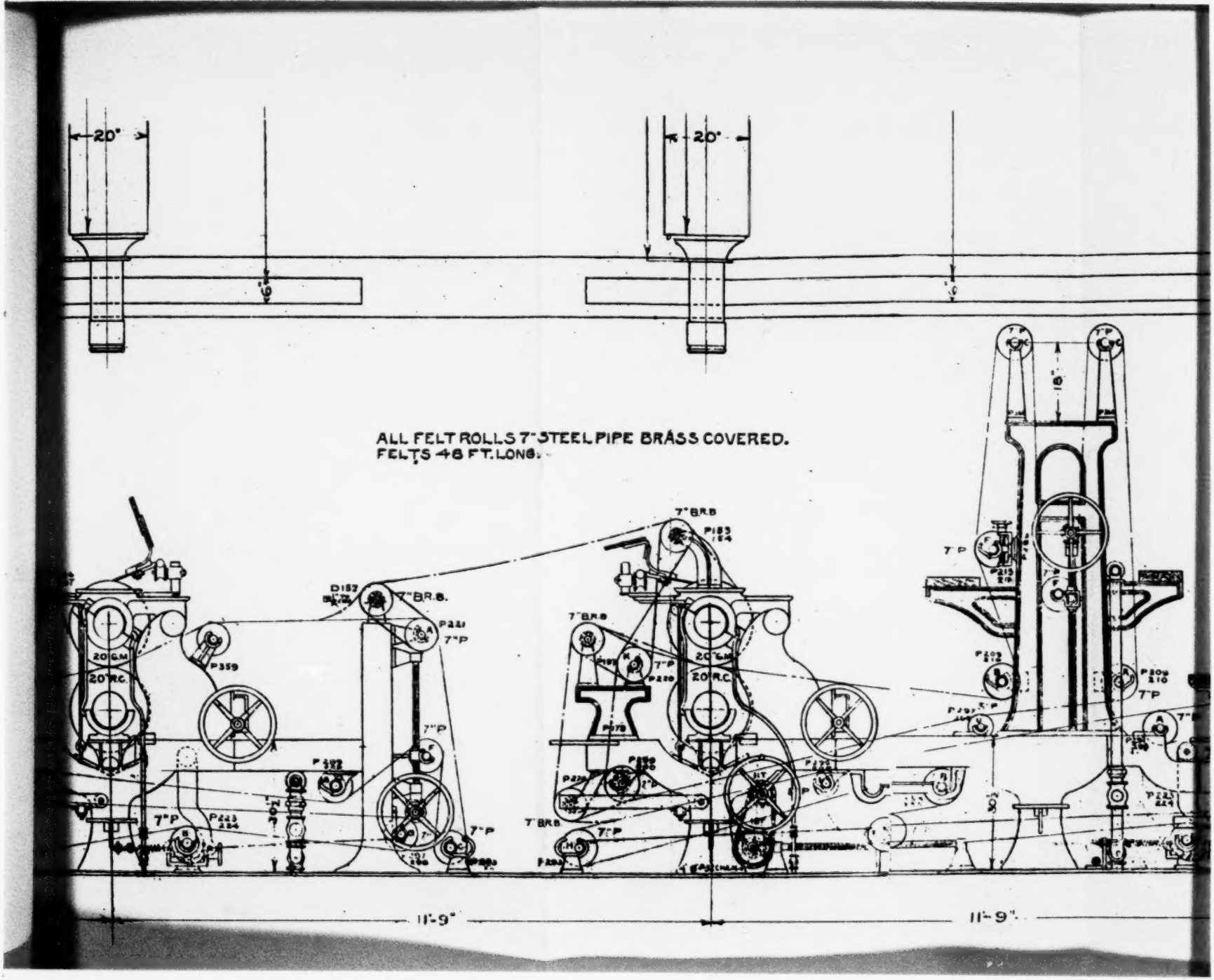
20"
20"
ALL FELT ROLLS 7" STEEL PIPE BRASS COVERED.
FELTS 48 FT. LONG.
7" BR.B.
7" P
20" G.M.
20" R.C.
11'-9"
11'-9"

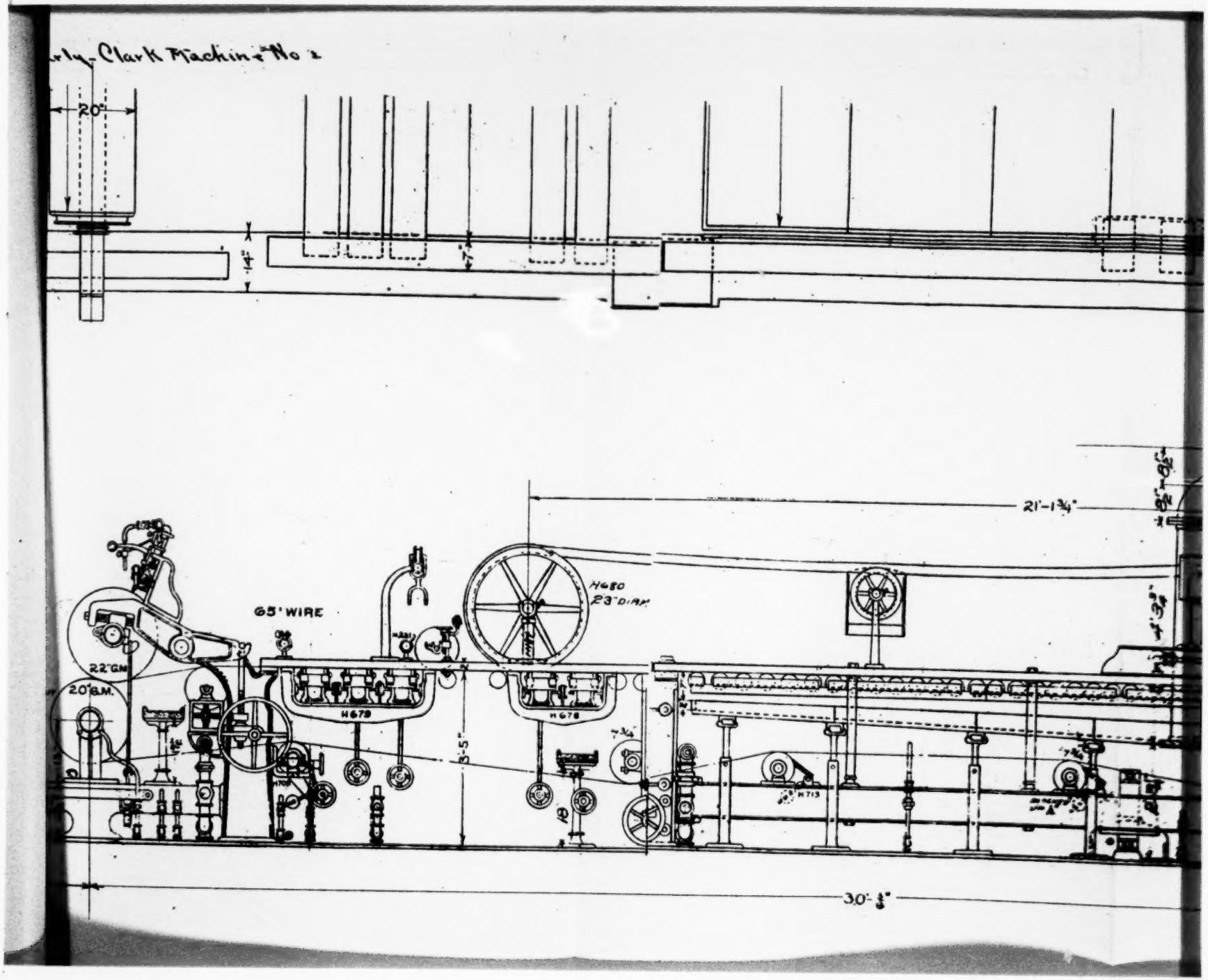

rly-Clark Machine No 2
20"
14"
7"
21'-1¾"
65' WIRE
H680
23" DIAM
22" G.M.
20" G.M.
H679
H678
3'-5"
7¾"
H713
30'-⅜"

Defendant's Exhibit O.

159

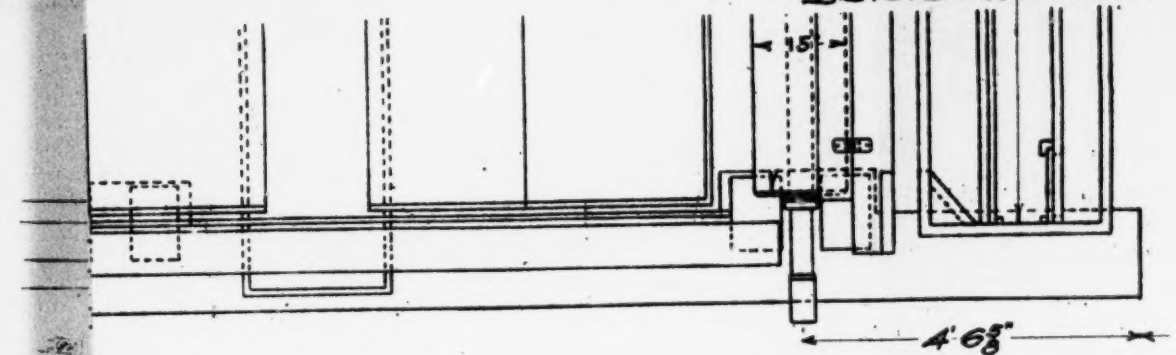

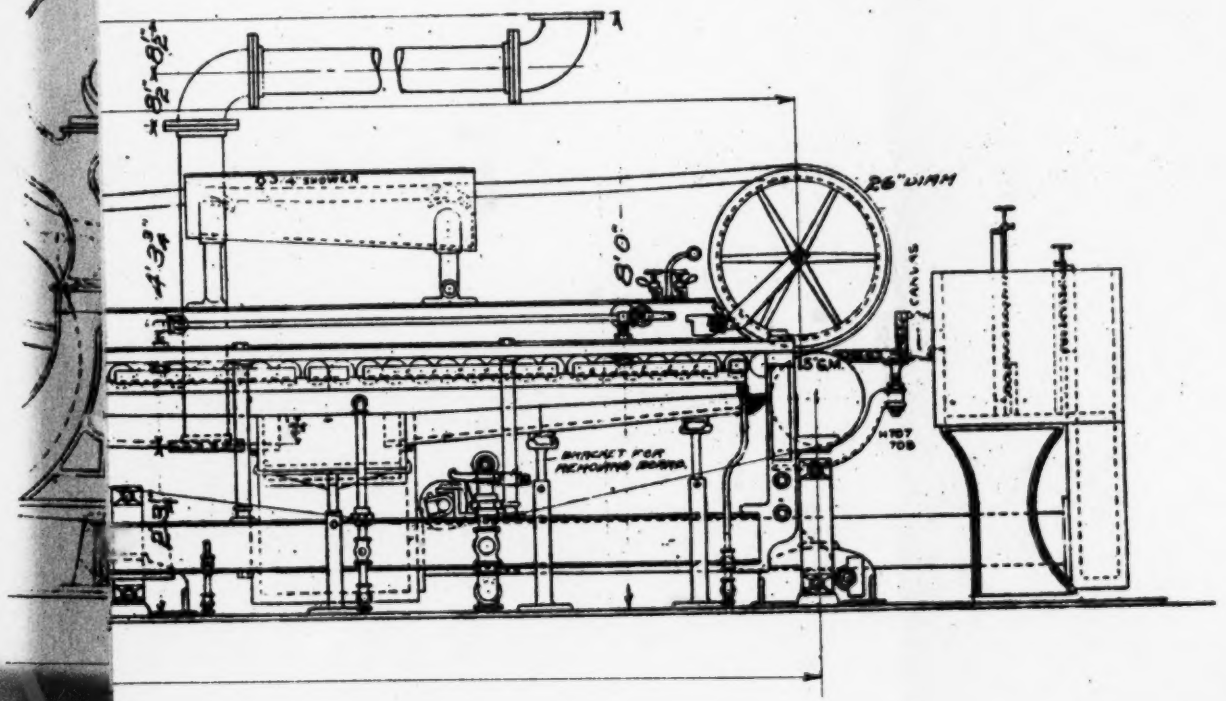

Defendant's Exhibit W.

CARTER DIAGRAMS SHEET No. 1.

SCALE 1" = 1'

DIAGRAM No. 1 SHOWING
ACTUAL PITCH NECESSARY TO MOCK
OF OPERATION SET FORTH IN
EIBEL PATENT IN SUIT
IN ORDER TO PRODUCE SPEED EQUALITY OF
STOCK AND WIRE AT A POINT 9 TO 10 FT
FROM SLICE, USING A 70 FT WIRE RUNNING
AT APPROXIMATLY 385 FT PER MINUTE
TOTAL PITCH 54 IN. NET PITCH 18 IN.

DIAGRAM No. 1a REPRODUCING PITCH SHOWN IN DRAWING OF EIBEL
PATENT IN SUIT, ASSUMING 70 FT. WIRE [illegible] 385 FT. PER MINUTE
AT A POINT 9½ FT. FROM SLICE THE SP[illegible] OF STOCK UNDER THE
ACTION OF GRAVITY DUE TO THE PITCH [illegible] WIRE WOULD BE ONLY 376 FT.
PER MINUTE OR LESS THAN HALF THE SPEED OF WIRE
TOTAL PITCH 12 IN. NET PITCH 4 IN. TO POINT 9½ FT. FROM SLICE

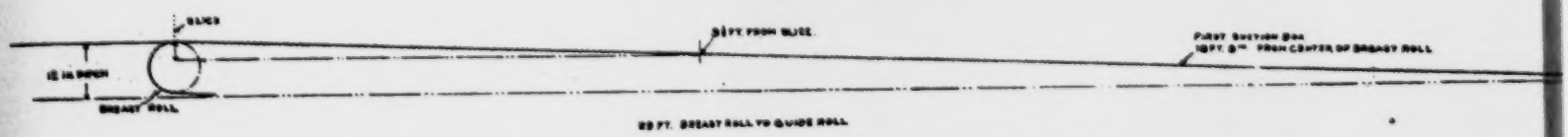

Defendant's Exhibit W.

CARTER DIAGRAMS

SHEET No 1A

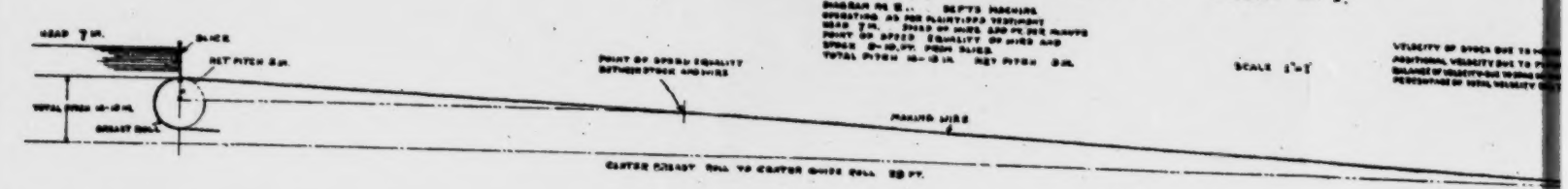

DIAGRAM No 2 ... DEPT'S MACHINES
OPERATING AS PER PLAN TYPED YESTERDAY
HEAD 7 IN. SPEED OF WIRE 420 FT PER MINUTE
POINT OF SPEED EQUALITY OF WIRE AND
STROKE 9-10 FT. FROM SLICE
TOTAL PITCH 16-18 IN. SET PITCH 8 IN.

SCALE 1"=1'

VELOCITY OF STOCK DUE TO H
ADDITIONAL VELOCITY DUE TO P
BALANCE OF VELOCITY DUE TO SUC
PERCENTAGE OF TOTAL VELOCITY

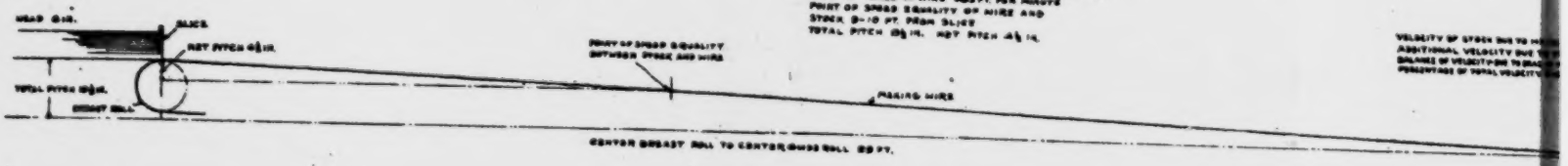

DIAGRAM No 3 DEPT'S MACHINES No's 1, 3 AND 4
HEAD 6" SPEED OF WIRE 400 FT. PER MINUTE
POINT OF SPEED EQUALITY OF WIRE AND
STOCK 9-10 FT. FROM SLICE
TOTAL PITCH 9½ IN. SET PITCH 4½ IN.

VELOCITY OF STOCK DUE TO H
ADDITIONAL VELOCITY DUE TO
BALANCE OF VELOCITY DUE TO SUC
PERCENTAGE OF TOTAL VELOCITY

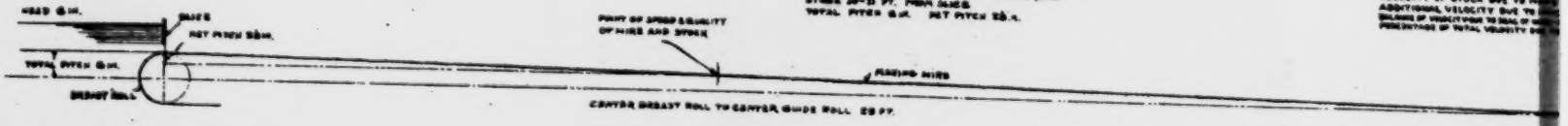

DIAGRAM No 4. DEPT'S No 2 MACHINE (New)
HEAD 6 IN. SPEED OF WIRE 350 FT. PER MINUTE
POINT OF SPEED EQUALITY OF WIRE AND
STROKE 20-22 FT. FROM SLICE
TOTAL PITCH 6 IN. SET PITCH 3¾ IN.

VELOCITY OF STOCK DUE TO H
ADDITIONAL VELOCITY DUE TO
BALANCE OF VELOCITY DUE TO SUC
PERCENTAGE OF TOTAL VELOCITY

Defendant's Exhibit W

CARTER DIAGRAMS SHEET NO. 2.

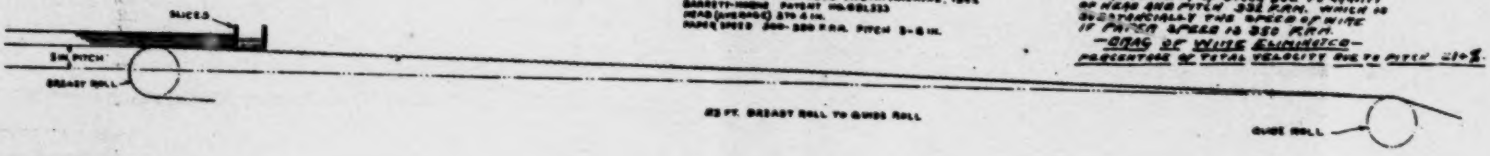

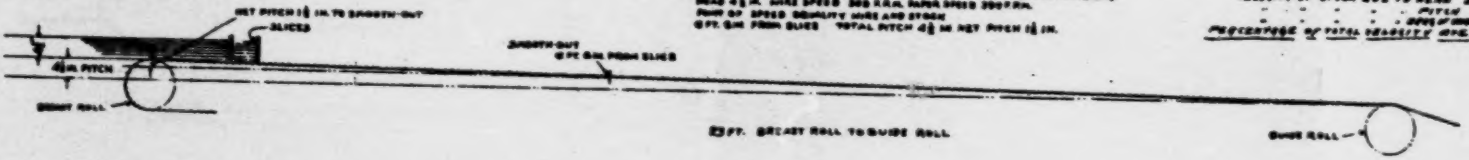

Defendant's Exhibit W.

CARTER DIAGRAMS

SHEET NO. 2A

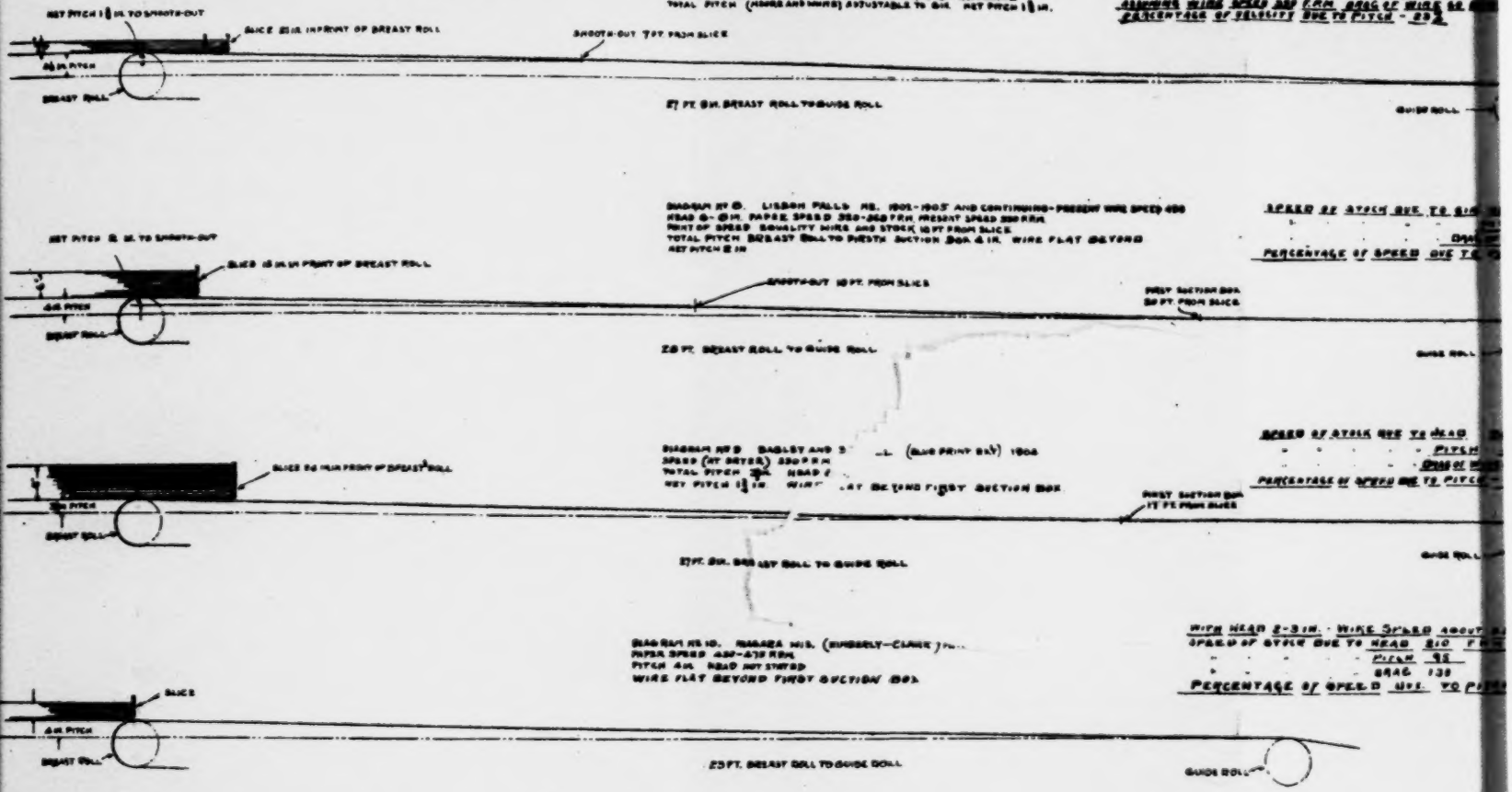

DIAGRAM NO 7. KIMBERLY-CLARK, KIMBERLY WISCONSIN, 1904
HEAD 2½ TO 3 IN. SPEED PER CONTRACT 80- 300 F.P.M.
DRIVE CHANGED TO PERMIT 450 F.P.M.
POINT OF SPEED EQUALITY WIRE AND STOCK 7 FT FROM SLICE
TOTAL PITCH (WIRES AND WIRE) ADJUSTABLE TO 8 IN. NET PITCH 1½ IN.

WITH HEAD OF 2½ IN. - PITCH OF 4½ IN.
VELOCITY OF STOCK DUE TO HEAD 400 F.P.M.
TOTAL — — — — — — — — — —
ASSUMING WIRE SPEED AND F.P.M. DRAG OF WIRE 50
PERCENTAGE OF DELOCITY DUE TO PITCH - 25%

DIAGRAM NO 8. LISBON FALLS ME. 1901-1903 AND CONTINUING-PRESENT WIRE SPEED 400
HEAD 6-8 IN. PAPER SPEED 350-360 F.P.M. PRESENT SPEED 330 F.P.M.
POINT OF SPEED EQUALITY WIRE AND STOCK 10 FT FROM SLICE
TOTAL PITCH BREAST ROLL TO FIRST SUCTION BOX 4 IN. WIRE FLAT BEYOND
NET PITCH 2 IN

SPEED OF STOCK DUE TO HEAD
- - - - - PITCH
- - - - - SPEED OF WIRE
PERCENTAGE OF SPEED DUE TO PITCH

DIAGRAM NO 9 BAGLEY AND S[illegible] (BLUE PRINT 8X5) 1904
SPEED (AT DRYER) 330 F.P.M.
TOTAL PITCH [illegible] HEAD [illegible]
NET PITCH 1½ IN. WIRE [illegible] BEYOND FIRST SUCTION BOX

DIAGRAM NO 10. NIAGARA ME. (KIMBERLY-CLARK)
PAPER SPEED 430-470 F.P.M.
PITCH 4½ HEAD NOT STATED
WIRE FLAT BEYOND FIRST SUCTION BOX

WITH HEAD 2-3 IN. - WIRE SPEED ABOUT
SPEED OF STOCK DUE TO HEAD 310 F.P.M.
- - - - - PITCH 92
- - - - - SPEED 138
PERCENTAGE OF SPEED DUE TO PITCH

Defendant's Exhibit W

CARTER DIAGRAMS SHEET No 3.

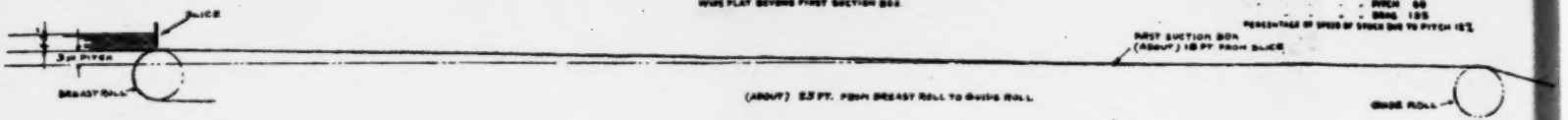

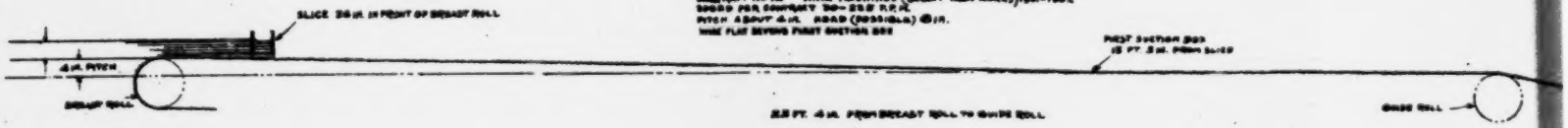

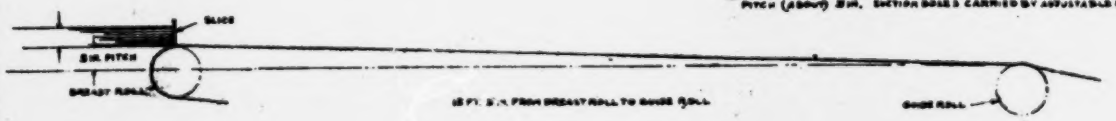

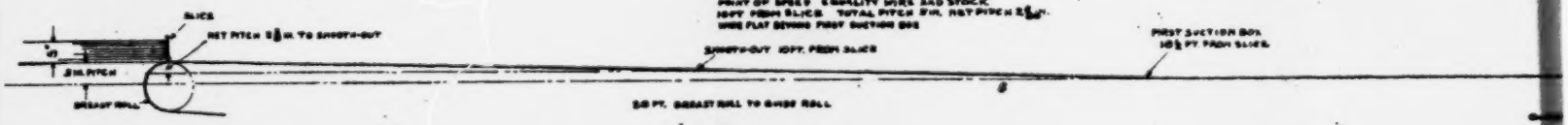

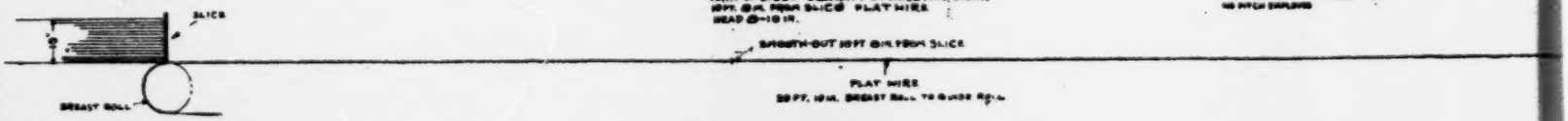

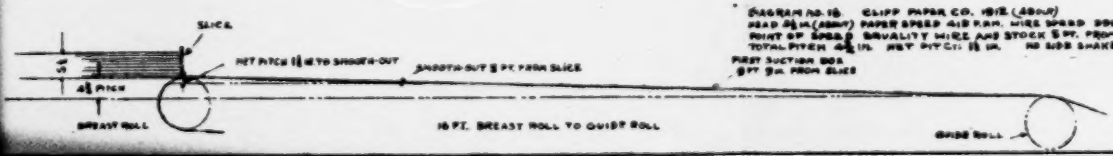

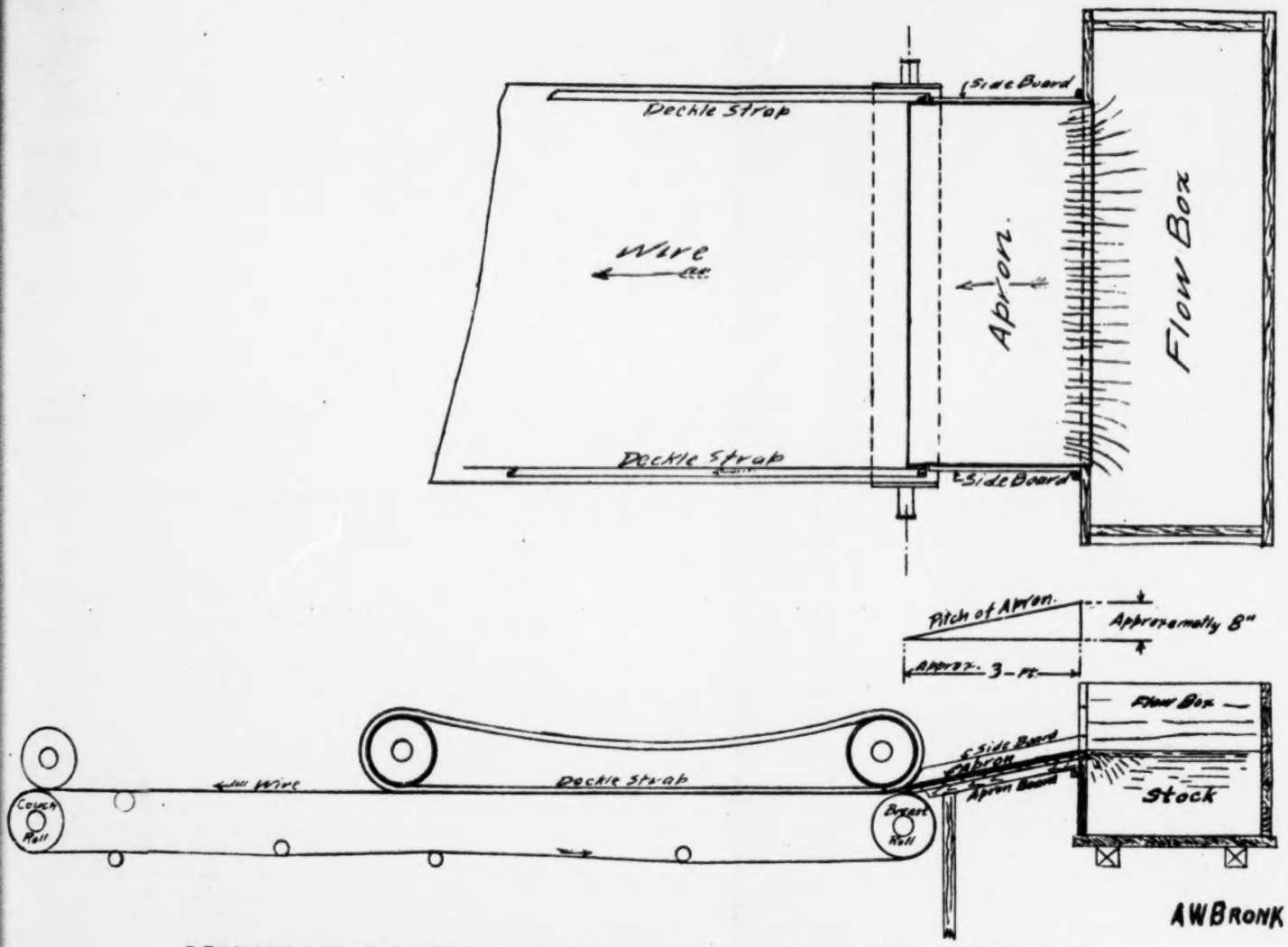

REPRODUCTION OF BLUE PRINT ATTACHED TO AFFIDAVIT A. W. BRONK

Clerk's Certificate.

I, Arthur I. Charron, Clerk of the United States Circuit Court of Appeals for the First Circuit, certify that the printed volumes entitled as follows:

Volume I, Plaintiff's Record and Proceedings in District Court and Circuit Court of Appeals;
Volume II, Defendant's Record and Supplemental Record;
Volume III, Exhibit Book,

this certificate being attached to each of said volumes, contain and are a true copy of the record and all proceedings to and including August 31, 1921, in the cause in said court numbered and entitled as follows:

No. 1504.

MINNESOTA & ONTARIO PAPER COMPANY, Defendant, Appellant,

v.

EIBEL PROCESS COMPANY, Plaintiff, Appellee.

In testimony whereof, I hereunto set my hand and affix the seal of said United States Circuit Court of Appeals for the First Circuit, at Boston, in said First Circuit, this thirty-first day of August, A. D. 1921.

[Seal of United States Circuit Court of Appeals, First Circuit.]

ARTHUR I. CHARRON,
Clerk.

UNITED STATES OF AMERICA, *ss:*

[Seal of the Supreme Court of the United States.]

The President of the United States of America to the Honorable the Judges of the United States Circuit Court of Appeals for the First Circuit, Greeting:

Being informed that there is now pending before you a suit in which Minnesota & Ontario Paper Company is appellant, and Eibel Process Company is appellee, No. 1504, which suit was removed into the said Circuit Court of Appeals by virtue of an appeal from the District Court of the United States for the District of Maine, and we, being willing for certain reasons that the said cause and the record and proceedings therein should be certified by the said Circuit Court of Appeals and removed into the Supreme Court of the United States, do hereby command you that you send without delay to the said Supreme Court, as aforesaid, the record and proceedings in said cause, so that the said Supreme Court may act thereon as of right and according to law ought to be done.

Witness the Honorable William H. Taft, Chief Justice of the United States, the first day of November, in the year of our Lord one thousand nine hundred and twenty-one.

WM. R. STANSBURY,
Clerk of the Supreme Court of the United States.

United States Circuit Court of Appeals for the First Circuit, October Term, 1921.

No. 1504.

MINNESOTA & ONTARIO PAPER COMPANY, Appellant,

v.

EIBEL PROCESS COMPANY, Appellee.

Stipulation.

(Filed in Circuit Court of Appeals November 15, 1921.)

In the above entitled case, it is hereby stipulated that the certified transcript of the record herein on file in the office of the Clerk of the Supreme Court of the United States in the matter of the Eibel Process Company, Petitioner, vs. Minnesota & Ontario Paper Company, Respondent, and there numbered 550 (October Term, 1921) upon the docket of said Court, may be taken as a return by this Court to the writ of certiorari issued by the Supreme Court of the United States in the said case.

AMASA C. PAUL,
Counsel for Appellant.
FISH, RICHARDSON & NEAVE,
Counsel for Appellee.

A true copy.
Attest:

[Seal of the United States Circuit Court of Appeals, First Circuit.]

ARTHUR I. CHARRON,
Clerk.

Return on Writ of Certiorari.

United States Circuit Court of Appeals for the First Circuit.

And now here the Judges of the United States Circuit Court of Appeals for the First Circuit make return to this writ by annexing hereto and sending herewith a stipulation between counsel for the respective parties in the cause in the Supreme Court of the United States wherein this writ of certiorari issued that the certified copy

of the transcript of record, now on file in the office of the Clerk of the Supreme Court, shall constitute the return of the Clerk of the Circuit Court of Appeals for the First Circuit to the writ of certiorari issued herein.

In testimony whereof, I, Arthur I. Charron, Clerk of said United States Circuit Court of Appeals for the First Circuit, hereto set my hand and affix the seal of said court, at Boston, in said First Circuit, this fifteenth day of November, A. D. 1921.

[Seal of United States Circuit Court of Appeals, First Circuit.]

ARTHUR I. CHARRON,
Clerk.

[Endorsed:] File No. 28,505. Supreme Court of the United States, October Term, 1922. No. 178. Eibel Process Company vs. Minnesota & Ontario Paper Company. Writ of Certiorari.

[Endorsed:] File No. 29,505. Supreme Court U. S., October Term, 1922. Term No. 178. Eibel Process Co., petitioner, vs. Minnesota & Ontario Paper Co. Writ of certiorari and return. Filed Nov. 16, 1921.